PROJECT NO.	ENGINEERING CONTRACT NO.	PARISH	SHEET NO.
TE-40	2511-02-05	TERREBONNE	1

STATE OF LOUISIANA
DEPARTMENT OF NATURAL RESOURCES
COASTAL RESTORATION DIVISION

PLANS OF PROPOSED

TIMBALIER ISLAND DUNE/MARSH RESTORATION PROJECT

PROJECT NO. TE-40

INDEX TO SHEETS

SHEET NO.	DESCRIPTION
1	TITLE PAGE
2	SUMMARY ESTIMATED QUANTITIES, CIVIL LEGEND, GENERAL NOTES
3	OVERALL PROJECT PLAN
4,5	TIMBALIER ISLAND TOPOGRAPHIC AERIAL MAPS 1"=1000'
6	TYPICAL SECTION
7-9	TIMBALIER ISLAND PROJECT LAYOUT AERIALS 1"=200'
10-11	SAND SOURCE BORROW AREA MAPS
12-19	TIMBALIER ISLAND CROSS-SECTIONS
20	OVERFLOW WEIR BOX DETAILS
21	TYPICAL SAND FENCING LAYOUT
22	CONSTRUCTION ACCESS AND BUCKET DREDGE
23	WHARF DETAILS

DATUM USED: N.A.V.D.
MAG.VAR.: N/A
BEARINGS ARE TRUE
TRANSIT BOOK(S): TBS #2833
PLAN: 1"=1000' & 1"=200'
DATE: 4/2002
SCALES:
PROFILES: HOR. 1"=100'
VERT. 1"=10'

TYPE OF CONSTRUCTION

HYDRAULIC DREDGING
CONTAINMENT LEVEES/STRUCTURES
SHAPING DUNE & MARSH PLATFORM
SAND FENCING

TERREBONNE PARISH

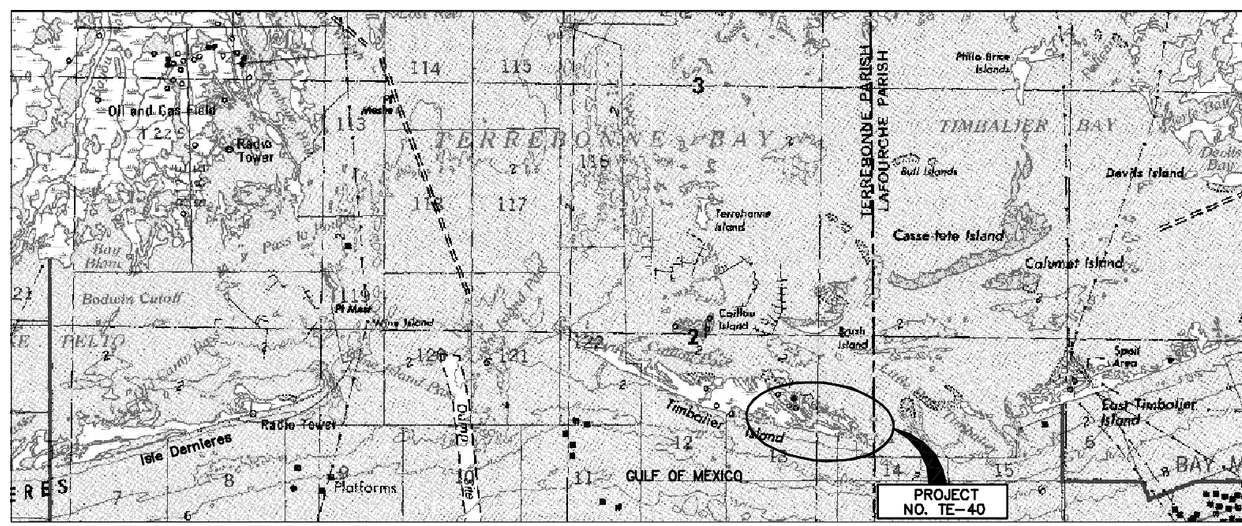

VICINITY MAP
1"=10,000'

STATE OF LOUISIANA
INSET MAP

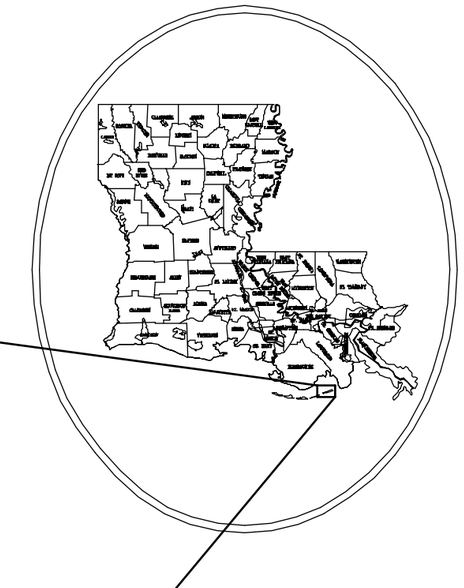

RECOMMENDED FOR APPROVAL

D.N.R. PROJECT MANAGER DATE

RECOMMENDED FOR APPROVAL

E.P.A. PROJECT MANAGER DATE

PREPARED BY
T. BAKER SMITH & SON, INC.

MARC J. ROGERS, SR., P.E. 11/03/03 REV.
DATE

FEDERAL PROJECT SPONSOR

STATE PROJECT SPONSOR

STATE OF LOUISIANA
MARC J. ROGERS
REG. No. 16940
REGISTERED
PROFESSIONAL ENGINEER
IN
CIVIL ENGINEERING

T. BAKER SMITH & SON, INC.
SURVEYING · ENGINEERING · ENVIRONMENTAL SERVICES
P.O. BOX 2029 HOUMA, LOUISIANA 70361
(985) 868-1050 http://www.tbsmith.com

SUMMARY OF ESTIMATED QUANTITIES

CIVIL LEGEND

- EXISTING CONTOUR LINE
- SLOPE BREAK LINE
- BUCKET DREDGE
- G.P.S. POINT WITH X, Y & Z CONTROL ON SURVEY BASELINE
- T.B.M., P.O.T., OR PI ON SURVEY TRAVERSE OR BASELINE SET BY ENGINEER, 3/4 INCH G.I.P.
- POINTS WITH LISTED COORDINATES
- NATURAL GAS OR OIL PIPELINE WITH SIZE IN INCHES.
- EXISTING CAMP
- OYSTER LEASE WITH ACREAGE
- FLOTATION CANAL
- BORROW AREA BOUNDARY
- SUITABLE SAND CONTOUR
- PILE CLUSTER
- EXISTING DOCKS TO BE REMOVED BY CONTRACTOR
- DENOTED CROSS-SECTION LOCATIONS
- TURBITY SCREEN
- DENOTES EXISTING INTERTIDAL MARSH
- DENOTES MAXIMUM DREDGE DEPTH OF 5'.
- DENOTES MAXIMUM DREDGE DEPTH OF 7.5'.

			PROPOSAL A		PROPOSAL B
			BASE BID *	ADDITIVE ALT. NO. 1 *	BASE BID *
ITEM No.	DESCRIPTION	UNIT	QUANTITY	QUANTITY	QUANTITY
1	MOBILIZATION	LUMP	LUMP	-----	LUMP
2	HYDRAULIC DREDGING	CU. YDS.	3,100,000	-----	4,100,000
3	CONTAINMENT DIKES	LIN. FT.	23,000	-----	32,500
4	SAND FENCE	LIN. FT.	22,750	-----	32,200
5	GRADING AND SHAPING	STATION	113.5	-----	160.5
6	TURBIDITY SCREEN	LIN. FT.	4,800	-----	4,800
● 7	ACCESS DREDGING	LUMP	LUMP	-----	LUMP
8	TIMBER CONSTRUCTION	LUMP	LUMP	-----	LUMP
9	BEACH FILL (HYDRAULIC DREDGE)	CU. YDS.	-----	500,000	-----

* CONTRACTOR SHALL USE DREDGE MATERIAL FROM LITTLE PASS BORROW AREA.

● APPROXIMATELY 22,000 C.Y. OF MATERIAL WILL BE EXCAVATED FOR ACCESS DREDGING.

GENERAL NOTES

1) THE RECOMMENDED BORROW AREAS ARE SHOWN ON SHEETS 10-11 OF THE DRAWINGS. THE CONTRACTOR SHALL USE THE LITTLE PASS BORROW AREA (SHEET 10) AS THE PRIMARY BORROW SOURCE FOR THE PROJECT. RECENT SAND LOGS OF THE VIBRACORES FOR THESE BORROW AREAS ARE AVAILABLE UPON REQUEST. BASED ON THE INFORMATION GIVEN IN THESE DRAWINGS THE CONTRACTOR SHALL DEVELOP A DREDGING PLAN TO BE APPROVED BY THE ENGINEER. IN NO CASE HOWEVER SHALL THE CONTRACTOR DREDGE BELOW 7.5 FEET BELOW THE EXISTING BOTTOM. WITHOUT PRIOR WRITTEN AUTHORIZATION FROM THE ENGINEER OR DNR.

2) THE CONTRACTOR SHALL BE RESPONSIBLE FOR NAVIGATING WITHIN THE LIMITS OF THE DREDGE PLAN AREA. THE ENGINEERS PROJECT REPRESENTATIVE SHALL MONITOR THE LOCATION DURING CONSTRUCTION.

3) THE CONTRACTOR SHALL BE RESPONSIBLE FOR NOTIFYING PIPELINE OPERATORS 48 HOURS IN ADVANCE OF THE WORK. AN ATTEMPT TO LOCATE EXISTING PIPELINES HAS BEEN MADE, HOWEVER, THE CONTRACTOR IS RESPONSIBLE FOR LOCATING ALL PIPELINES WITHIN THE FILL AND BORROW AREAS PRIOR TO CONSTRUCTION. THE CONTRACTOR SHALL USE DOTTIE TO DETERMINE THE LOCATION OF ALL PIPELINES. DO NOT DREDGE WITHIN 200' OF A PIPELINE.

4) OYSTER LEASES ARE IN THE VICINITY OF THE WORK. THE CONTRACTOR SHALL NOT DREDGE OR DISTURB BOTTOM WITHIN THE LIMIT OF OYSTER LEASES SHOWN ON THE DRAWING AND NOT DIRECTLY AFFECTED BY THE WORK. PERMISSION TO FILL LEASES THAT ARE LOCATED WITHIN THE PROJECT FOOTPRINT HAS BEEN OBTAINED. LEASES ARE LISTED BELOW.

LEASE NO.	LESEE
L-29170	GEORGE J. SEVIN
L-29313	EFRAM NAQUIN
L-29509	PERCY DARDAR SR.
L-29528	FRANK CHAISSON
L-29530	WILFRED CHAISSON
L-29692	GENE TRAHAN
L-32117	GORDON AUTHEMENT

5) SAND SOURCE INFORMATION TAKEN FROM A 2001-2002 SURVEY DONE BY OCEAN SURVEYS, INC.

6) VOLUMES SHOWN ARE FOR BIDDING PURPOSES ONLY AND WERE CALCULATED ACCORDING TO CONDITIONS SURVEYED IN DECEMBER 2001. BEFORE AND AFTER DREDGING, CROSS-SECTIONS WILL BE SURVEYED BY THE CONTRACTOR FOR MEASUREMENT AND PAYMENT PURPOSES. ALL SURVEY WORK PERFORMED BY CONTRACTOR FOR MEASUREMENT AND PAYMENT WILL BE MONITORED BY THE ENGINEER. THE ENGINEER SHALL REVIEW ALL BEFORE AND AFTER SURVEY CROSS-SECTIONS AND MEASUREMENTS AND PAYMENT CALCULATIONS. IF A DISCREPANCY CANNOT BE RESOLVED THE ENGINEER SHALL PERFORM A CROSS-SECTION SURVEY TO VERIFY THE CONTRACTORS WORK.

NOTES:

1) VERTICAL DATUM - NAVD 88

DATE	REVISIONS	DRAWN BY	APPROVED BY
11/03/03	Revised Quantities	DFB	DFB
10/23/02	Final Revisions	KSP	DFB

REVISIONS

STATE OF LOUISIANA
MARC J. ROGERS
REG. No. 16940
REGISTERED PROFESSIONAL ENGINEER IN CIVIL ENGINEERING

T. BAKER SMITH & SON, INC.
SURVEYING - ENGINEERING - ENVIRONMENTAL SERVICES
P.O. BOX 2266 HOUMA, LOUISIANA 70361
(985) 868-1050 http://www.tbsmith.com

FILE NAME:	01075-Quan
TBS NO.:	E20010075
DATE:	08/13/02
PLOT SCALE:	1=1
DRAWN BY:	KSP
APPROVED:	DFB
MAP NO.	

SUMMARY OF ESTIMATED QUANTITIES, CIVIL LEGEND AND GENERAL NOTES

TIMBALIER ISLAND DUNE / MARSH RESTORATION PROJECT (TE-40)
ENGINEERING CONTRACT NO. - 2511-02-05
DEPARTMENT OF NATURAL RESOURCES
COASTAL RESTORATION DIVISION

SHEET NO. 2 OF 23

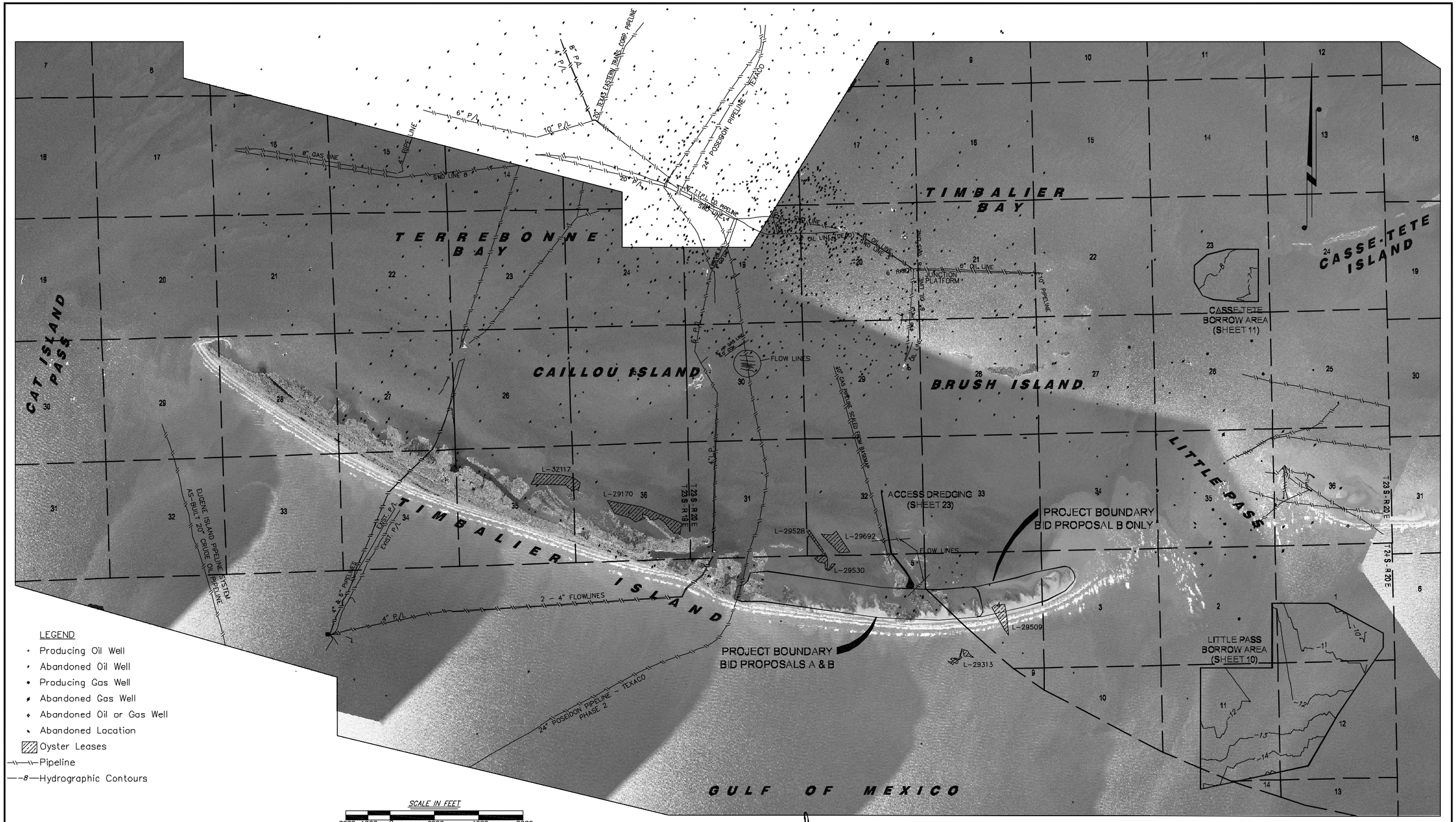

NOTES:
1) Aerials flown on October 14, 2001. at an altitude of 18,000'.
2) HORIZONTAL DATUM - NAD 83
VERTICAL DATUM - NAVD 88
3) PIPELINES WERE LOCATED BY DIGITIZING EXISTING MAPS.
SOME PIPELINES WERE FIELD LOCATED DURING THE SEISMIC SURVEY.

DATE	REVISIONS	DRAWN BY	APPROVED BY
10/23/02	Final Revisions	KSP	DFB

REVISIONS

STATE OF LOUISIANA
MARC J. ROGERS
REG. No. 16940
REGISTERED PROFESSIONAL ENGINEER IN CIVIL ENGINEERING

T. BAKER SMITH & SON, INC.
SURVEYING - ENGINEERING - ENVIRONMENTAL SERVICES
P.O. BOX 2266 HOUMA, LOUISIANA 70361
(985) 868-1050 http://www.tbsmith.com

FILE NAME:	01075-Overall
TBS NO.:	E2001 075
DATE:	5/13/02
PLOT SCALE:	1" = 2000'
DRAWN BY:	KSP
APPROVED:	DFB
MAP NO.	

OVERALL PROJECT PLAN

TIMBALIER ISLAND DUNE / MARSH
RESTORATION PROJECT (TE-40)
ENGINEERING CONTRACT NO. - 2511-02-05
DEPARTMENT OF NATURAL RESOURCES
COASTAL RESTORATION DIVISION

SHEET NO. 3 OF 23

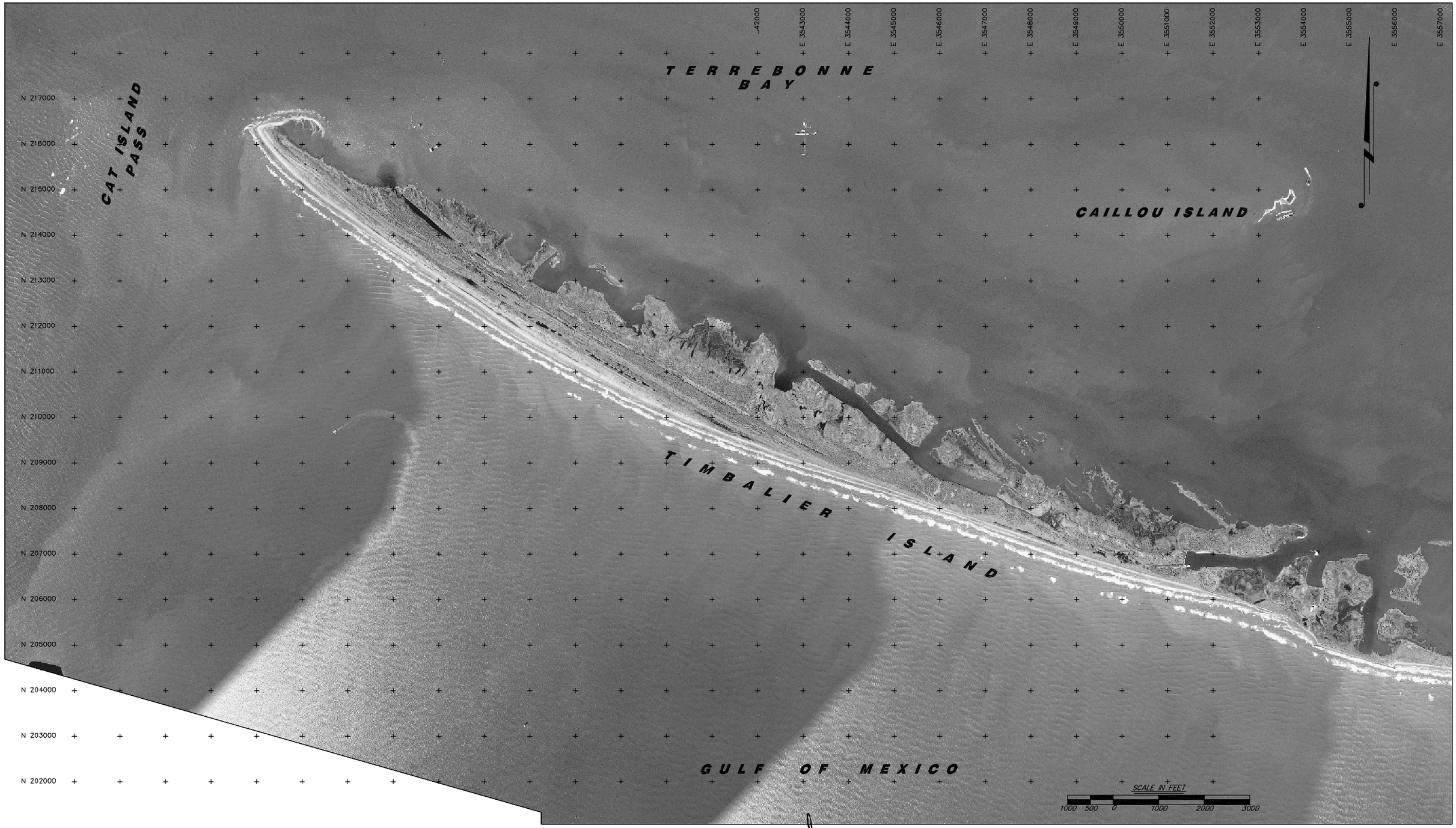

NOTES:
1) Aerials flown on October 14, 2001. at an altitude of 18,000'.
2) HORIZONTAL DATUM - NAD 83
VERTICAL DATUM - NAVD 88

DATE	REVISIONS	DRAWN BY	APPROVED BY
10/23/02	Final Revisions	KSP	DFB

REVISIONS

STATE OF LOUISIANA
MARC J. ROGERS
REG. No. 16940
REGISTERED
PROFESSIONAL ENGINEER
IN
CIVIL ENGINEERING

T. BAKER SMITH & SON, INC.
SURVEYING - ENGINEERING - ENVIRONMENTAL SERVICES
P.O. BOX 2266 HOUMA, LOUISIANA 70361
(985) 868-1050 http://www.tbsmith.com

FILE NAME:	01075-Aerial1
TBS NO.:	E2001-075
DATE:	08/13/02
PLOT SCALE:	1"=1000'
DRAWN BY:	KSP
APPROVED:	DFB
MAP NO.	

TIMBALIER ISLAND TOPOGRAPHICAL AERIAL

TIMBALIER ISLAND DUNE / MARSH
RESTORATION PROJECT (TE-40)
ENGINEERING CONTRACT NO. - 2511-02-05
DEPARTMENT OF NATURAL RESOURCES
COASTAL RESTORATION DIVISION

SHEET NO.
4
OF
23

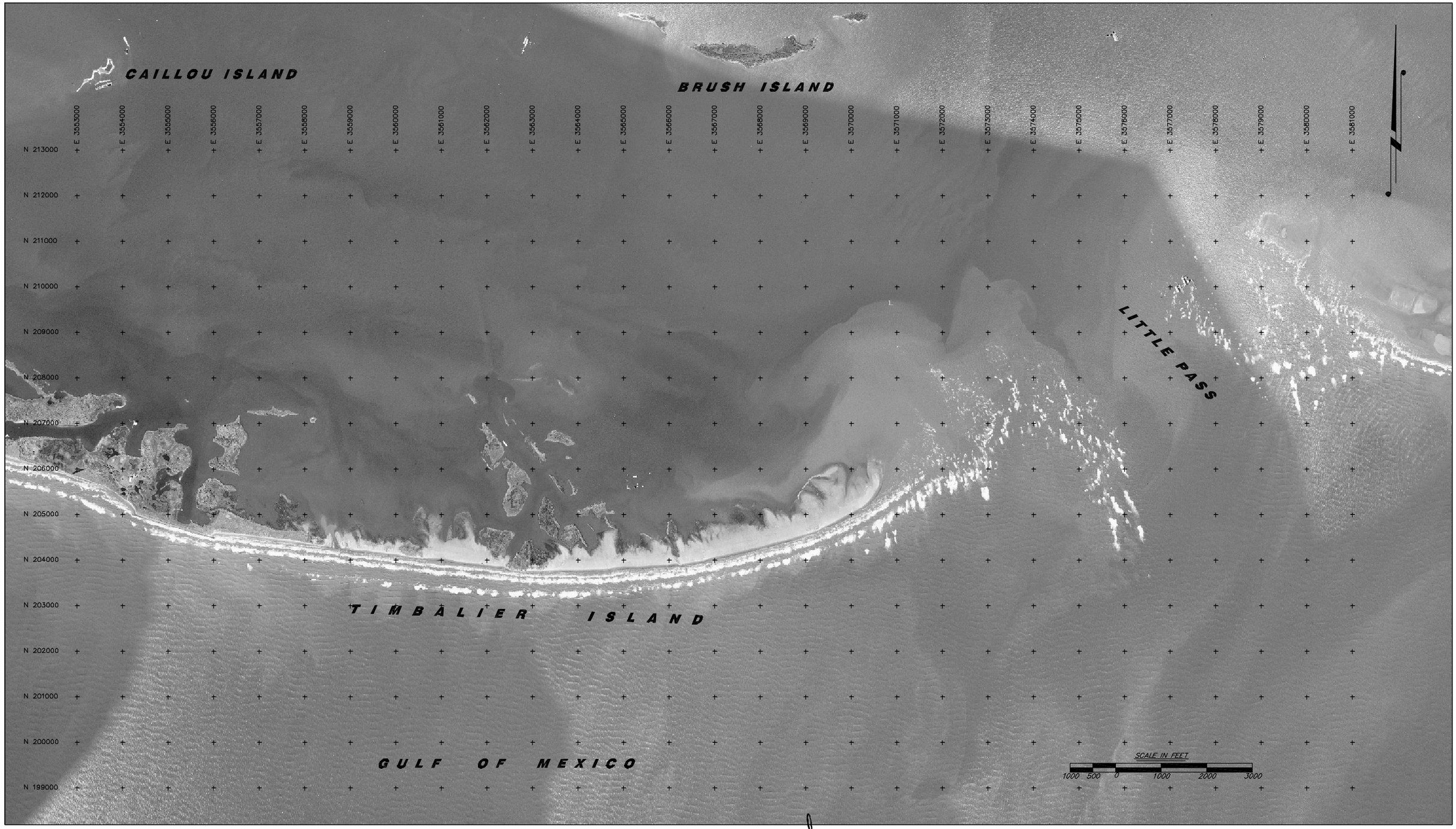

NOTES:
1) Aerials flown on October 14, 2001. at an altitude of 18,000'.
2) HORIZONTAL DATUM - NAD 83
VERTICAL DATUM - NAVD 88

DATE	REVISIONS	DRAWN BY	APPROVED BY
10/23/02	Final Revisions	KSP	DFB

REVISIONS

STATE OF LOUISIANA
MARC J. ROGERS
REG. No. 16940
REGISTERED
PROFESSIONAL ENGINEER
IN
CIVIL ENGINEERING

T. BAKER SMITH & SON, INC.
SURVEYING - ENGINEERING - ENVIRONMENTAL SERVICES
P.O. BOX 2255 HOUMA, LOUISIANA 70361
(985) 868-1050 http://www.tbsmith.com

FILE NAME:	01075-A01&2
TBS NO.:	E2001-075
DATE:	08/14/02
PLOT SCALE:	1"=1000'
DRAWN BY:	KSP
APPROVED:	DFB
MAP NO.	

TIMBALIER ISLAND TOPOGRAPHICAL AERIAL

TIMBALIER ISLAND DUNE / MARSH
RESTORATION PROJECT (TE-40)
ENGINEERING CONTRACT NO. - 2511-02-05
DEPARTMENT OF NATURAL RESOURCES
COASTAL RESTORATION DIVISION

SHEET NO. 5 OF 23

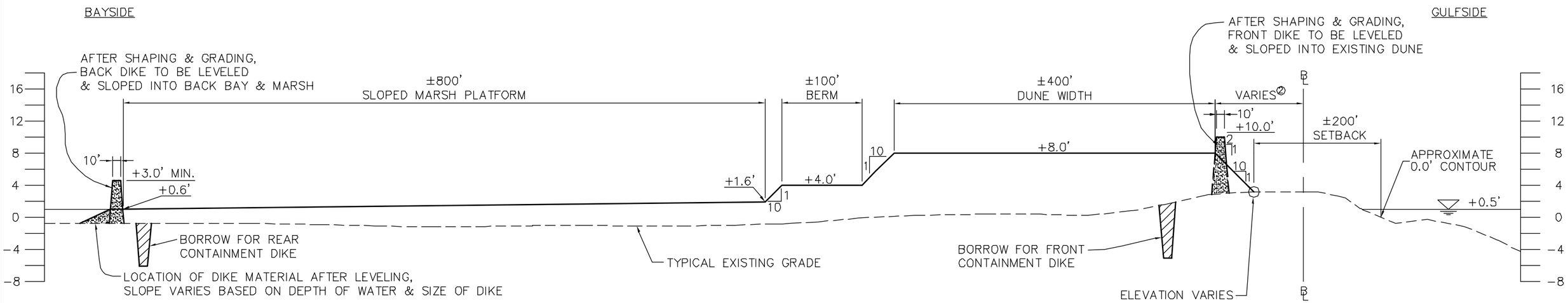

TYPICAL DESIGN SECTION

SCALE: HORIZ. 1"=60'
VERT. 1"=6'

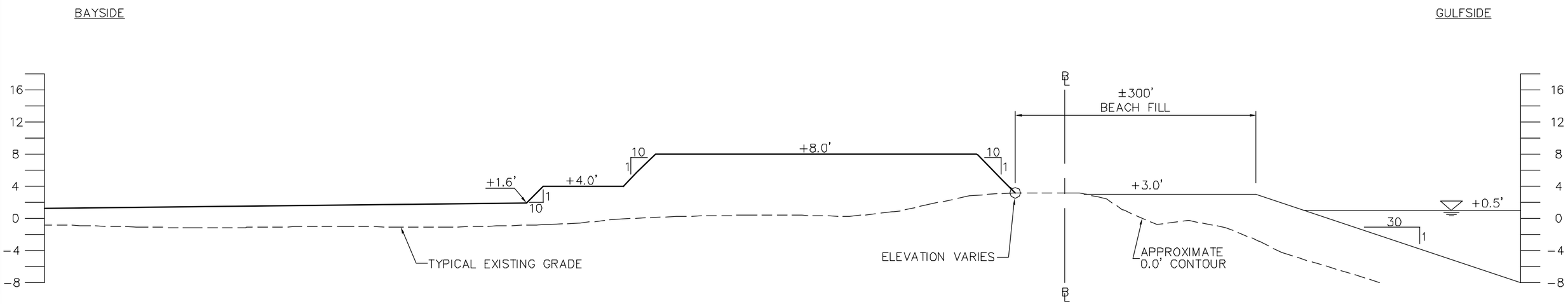

TYPICAL BEACH FILL SECTION STA. 159+00 – 203+00

SCALE: HORIZ. 1"=60'
VERT. 1"=6'

NOTES:

1) VERTICAL DATUM - NAVD88
2) REFER TO SHEETS 12-19 FOR EXACT DIMENSIONS
3) ALL ELEVATIONS DEPICTED ARE FINISHED CONSTRUCTION HEIGHTS.

DATE	REVISIONS	DRAWN BY	APPROVED BY
11/03/03	Removed Geotubes	DFB	DFB
10/23/02	Final Revisions	KSP	DFB

REVISIONS

STATE OF LOUISIANA
MARC J. ROGERS
REG. No. 16940
REGISTERED PROFESSIONAL ENGINEER IN CIVIL ENGINEERING

T. BAKER SMITH & SON, INC.
SURVEYING - ENGINEERING - ENVIRONMENTAL SERVICES
P.O. BOX 2266 HOUMA, LOUISIANA 70361
(985) 868-1050 http://www.tbsmith.com

FILE NAME:	01075-TX8.DWG
TBS NO.:	E2001 075
DATE:	08/14/02
PLOT SCALE:	1 = 60
DRAWN BY:	KSP
APPROVED:	
MAP NO.	

TYPICAL CROSS SECTIONS

TIMBALIER ISLAND DUNE / MARSH RESTORATION PROJECT (TE-40)
ENGINEERING CONTRACT NO. - 2511-02-05
DEPARTMENT OF NATURAL RESOURCES
COASTAL RESTORATION DIVISION

SHEET NO. 6 OF 23

"TIMBALIER"
DEEP ROD MONUMENT
X = 3,554,437.42
Y = 208,444.09
ELEV. = +5.05

2 - 4" FLOWLINES

85+00 90+00 95+00 100+00 105+00 110+00 115+00 120+00 125+00 130+00 135+00

CONSTRUCTION ACCESS

DENOTES INTERTIDAL MARSH AREAS WHERE CONTRACTOR IS TO LIMIT DREDGING MATERIAL TO A MAXIMUM OF 6"

TIMBALIER ISLAND

OYSTER LEASE L-29530
EXPIRES 1/1/03

TURBIDITY SCREEN

LIMITS OF CONSTRUCTION

CONSTRUCTION LIMITS ARE FOR BID PROPOSALS A & B

± 800' MARSH PLATFORM

± 100' BERM

SAND FENCE SEE SHT. 21 FOR DETAILS

± 400' DUNE

CONTROL PT. 10
3/4" GIP
STA. 82+98.22
X = 3,554,298.485
Y = 205,029.203
ELEV. = +4.273

1703.78'
S 75°46'04" E

LIMITS OF CONSTRUCTION

PROJECT BASELINE

2250.50'
S 83°54'56" E

CONTROL PT. 20
3/4" GIP
STA. 100+00.00
X = 3,555,949.976
Y = 204,610.323
ELEV. = +7.319

STA. 92+59 BEGIN SAND FENCING
BID PROPOSALS A & B

24" POSEIDON PIPELINE - TEXACO
PHASE 2

LIMITS OF CONSTRUCTION

2420.15'
S 83°15'47" E

CONTROL PT. 30
3/4" GIP
STA. 122+50.50
X = 3,558,187.7989
Y = 204,371.7838
ELEV. = +3.984

Match Line Sta. 135+00

GULF OF MEXICO

IMPORTANT NOTE:

THE CONTRACTOR SHALL ACCESS THE FILL AREA VIA THE PIPELINE CANAL ON THE WESTERN END OF THE PROJECT OR VIA THE LOCATION CANAL IN THE CENTER OF THE PROJECT ONLY. THE CONTRACTOR SHALL ALSO ONLY BE ALLOWED TO MOVE EQUIPMENT WITHIN THE DUNE AND BERM FOOTPRINTS AND WITHIN OPEN WATER AREAS OF THE MARSH PLATFORM FOOTPRINT. AT NO TIME UNLESS DIRECTED BY THE ENGINEER OR OWNER SHALL THE CONTRACTOR MOVE EQUIPMENT, PIPE, ETC. ON OR ACROSS EXISTING MARSH WITHIN THE MARSH PLATFORM FOOTPRINT.

SCALE IN FEET
200 100 0 200 400 600

NOTES:

1) Aerials flown on October 25, 2001. at an altitude of 6,000'.

2) HORIZONTAL DATUM - NAD 83
VERTICAL DATUM - NAVD 88

DATE	REVISIONS	DRAWN BY	APPROVED BY
11/03/03	Construction Limits; Sand Fencing ; Geotube Revisions	DFB	DFB
10/23/02	Final Revisions	KSP	DFB

REVISIONS

MARC J. ROGERS
REG. No. 16940
REGISTERED PROFESSIONAL ENGINEER IN CIVIL ENGINEERING
STATE OF LOUISIANA

T. BAKER SMITH & SON, INC.
SURVEYING - ENGINEERING - ENVIRONMENTAL SERVICES
P.O. BOX 2265 HOUMA, LOUISIANA 70361
(985) 868-1050 http://www.tbsmith.com

FILE NAME:	01075-P01.DWG
TBS NO.:	E2001-075
DATE:	6/14/02
PLOT SCALE:	1 = 200
DRAWN BY:	KSP
APPROVED:	DFB
MAP NO.	

PROJECT LAYOUT AERIALS

TIMBALIER ISLAND DUNE / MARSH RESTORATION PROJECT (TE-40)
ENGINEERING CONTRACT NO. - 2511-02-05
DEPARTMENT OF NATURAL RESOURCES
COASTAL RESTORATION DIVISION

SHEET NO. 7 OF 23

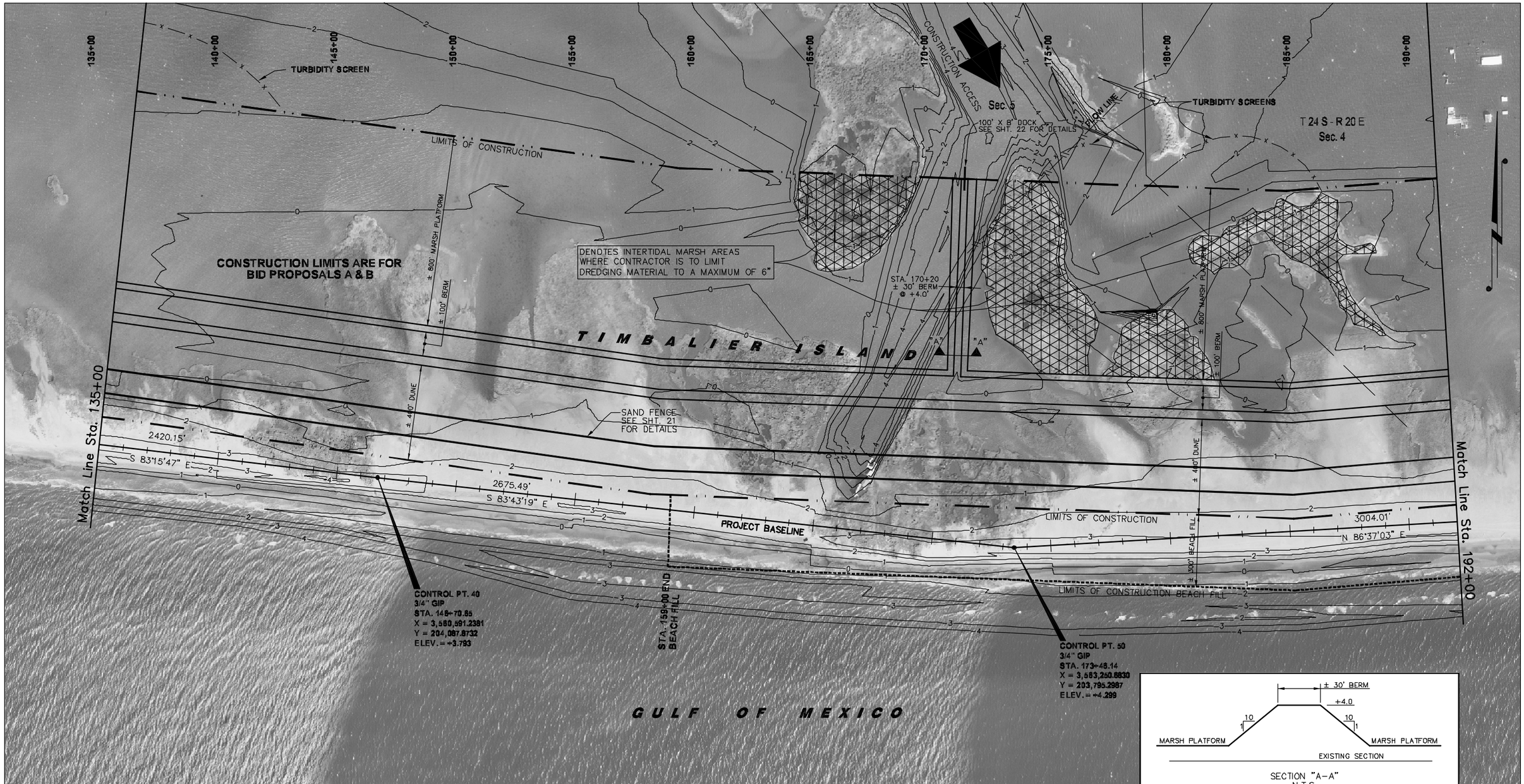

IMPORTANT NOTE:

THE CONTRACTOR SHALL ACCESS THE FILL AREA VIA THE PIPELINE CANAL ON THE WESTERN END OF THE PROJECT OR VIA THE LOCATION CANAL IN THE CENTER OF THE PROJECT ONLY. THE CONTRACTOR SHALL ALSO ONLY BE ALLOWED TO MOVE EQUIPMENT WITHIN THE DUNE AND BERM FOOTPRINTS AND WITHIN OPEN WATER AREAS OF THE MARSH PLATFORM FOOTPRINT. AT NO TIME UNLESS DIRECTED BY THE ENGINEER OR OWNER SHALL THE CONTRACTOR MOVE EQUIPMENT, PIPE, ETC. ON OR ACROSS EXISTING MARSH WITHIN THE MARSH PLATFORM FOOTPRINT.

SCALE IN FEET

200 100 0 200 400 600

NOTES:

1) Aerials flown on October 25, 2001. at an altitude of 6,000'.

2) HORIZONTAL DATUM - NAD 83
VERTICAL DATUM - NAVD 88

DATE	REVISIONS	DRAWN BY	APPROVED BY
11/03/03	Sand Fencing and Geotube Revisions	DFB	DFB
10/23/02	Final Revisions	KSP	DFB

REVISIONS

STATE OF LOUISIANA
MARC J. ROGERS
REG. No. 16940
REGISTERED
PROFESSIONAL ENGINEER
IN
CIVIL ENGINEERING

T. BAKER SMITH & SON, INC.
SURVEYING - ENGINEERING - ENVIRONMENTAL SERVICES
P.O. BOX 2265 HOUMA, LOUISIANA 70361
(985) 868-1050 http://www.tbsmith.com

FILE NAME:	01075-PO2.DWG
TBS NO.:	E2001-075
DATE:	08/15/02
PLOT SCALE:	1 = 200
DRAWN BY:	KSP
APPROVED:	DFB
MAP NO.	

PROJECT LAYOUT AERIALS

TIMBALIER ISLAND DUNE / MARSH
RESTORATION PROJECT (TE-40)
ENGINEERING CONTRACT NO. - 2511-02-05
DEPARTMENT OF NATURAL RESOURCES
COASTAL RESTORATION DIVISION

SHEET NO. 8 OF 23

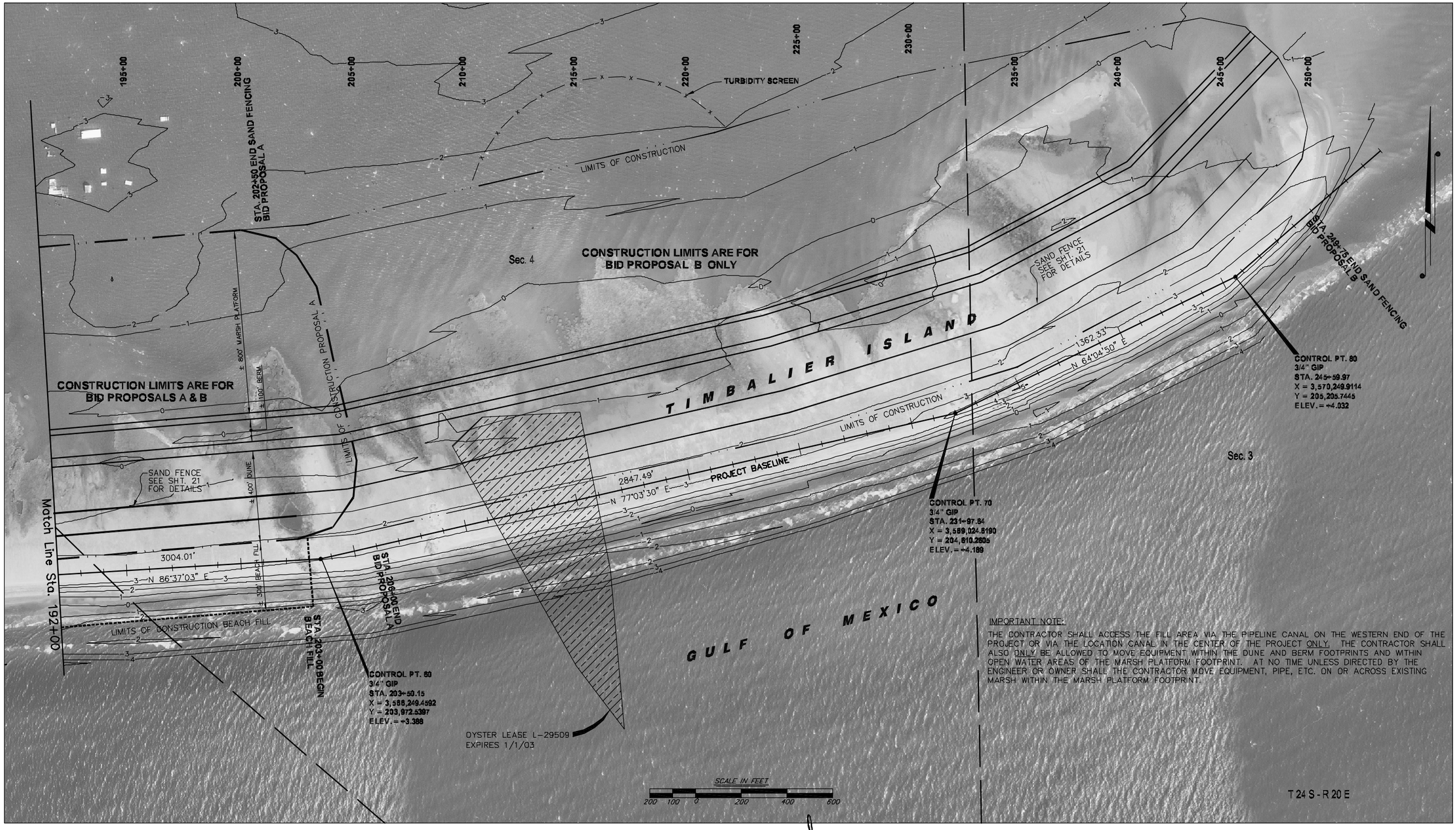

IMPORTANT NOTE:

THE CONTRACTOR SHALL ACCESS THE FILL AREA VIA THE PIPELINE CANAL ON THE WESTERN END OF THE PROJECT OR VIA THE LOCATION CANAL IN THE CENTER OF THE PROJECT ONLY. THE CONTRACTOR SHALL ALSO ONLY BE ALLOWED TO MOVE EQUIPMENT WITHIN THE DUNE AND BERM FOOTPRINTS AND WITHIN OPEN WATER AREAS OF THE MARSH PLATFORM FOOTPRINT. AT NO TIME UNLESS DIRECTED BY THE ENGINEER OR OWNER SHALL THE CONTRACTOR MOVE EQUIPMENT, PIPE, ETC. ON OR ACROSS EXISTING MARSH WITHIN THE MARSH PLATFORM FOOTPRINT.

NOTES:

1) Aerials flown on October 25, 2001. at an altitude of 6,000'.

2) HORIZONTAL DATUM - NAD 83
VERTICAL DATUM - NAVD 88

DATE	REVISIONS	DRAWN BY	APPROVED BY
11/03/03	Construction Limits; Sand Fencing and Geotube Revisions	DFB	DFB
10/23/02	Final Revisions	KSP	DFB

REVISIONS

STATE OF LOUISIANA
MARC J. ROGERS
REG. No. 16940
REGISTERED
PROFESSIONAL ENGINEER
IN
CIVIL ENGINEERING

T. BAKER SMITH & SON, INC.
SURVEYING - ENGINEERING - ENVIRONMENTAL SERVICES
P.O. BOX 2266 HOUMA, LOUISIANA 70361
(985) 868-1050 http://www.tbsmith.com

FILE NAME:	01075-P03.DWG
TBS NO.:	E2001-075
DATE:	08/15/02
PLOT SCALE:	1 = 200
DRAWN BY:	KSP
APPROVED:	DFB
MAP NO.	

PROJECT LAYOUT AERIALS

TIMBALIER ISLAND DUNE / MARSH
RESTORATION PROJECT (TE-40)
ENGINEERING CONTRACT NO. - 2511-02-05
DEPARTMENT OF NATURAL RESOURCES
COASTAL RESTORATION DIVISION

SHEET NO. 9 OF 23

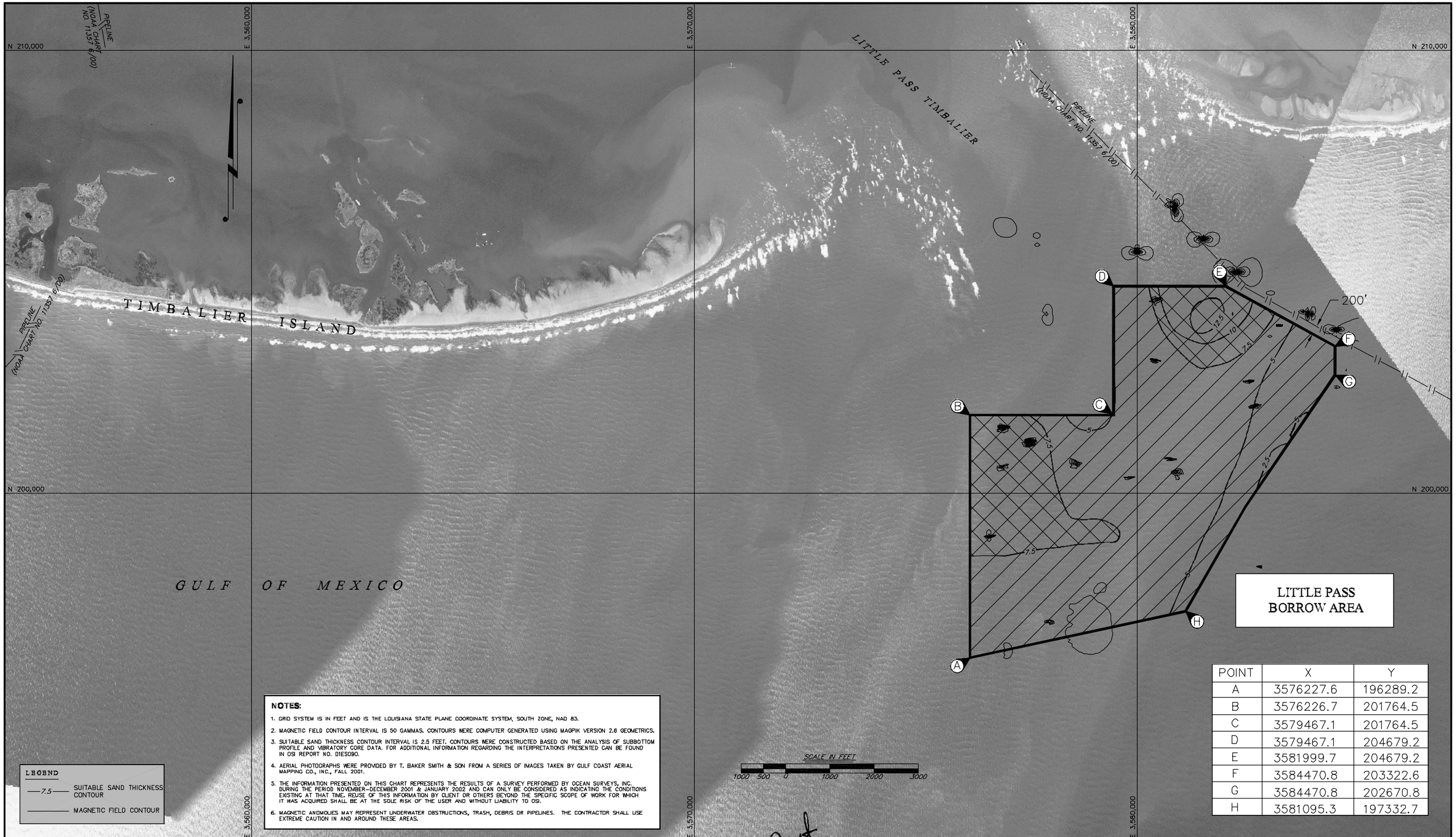

POINT	X	Y
A	3576227.6	196289.2
B	3576226.7	201764.5
C	3579467.1	201764.5
D	3579467.1	204679.2
E	3581999.7	204679.2
F	3584470.8	203322.6
G	3584470.8	202670.8
H	3581095.3	197332.7

LEGEND

—7.5— SUITABLE SAND THICKNESS CONTOUR

——— MAGNETIC FIELD CONTOUR

NOTES:

1. GRID SYSTEM IS IN FEET AND IS THE LOUISIANA STATE PLANE COORDINATE SYSTEM, SOUTH ZONE, NAD 83.
2. MAGNETIC FIELD CONTOUR INTERVAL IS 50 GAMMAS. CONTOURS WERE COMPUTER GENERATED USING MAGPIK VERSION 2.6 GEOMETRICS.
3. SUITABLE SAND THICKNESS CONTOUR INTERVAL IS 2.5 FEET. CONTOURS WERE CONSTRUCTED BASED ON THE ANALYSIS OF SUBBOTTOM PROFILE AND VIBRATORY CORE DATA. FOR ADDITIONAL INFORMATION REGARDING THE INTERPRETATIONS PRESENTED CAN BE FOUND IN OSI REPORT NO. 01ES090.
4. AERIAL PHOTOGRAPHS WERE PROVIDED BY T. BAKER SMITH & SON FROM A SERIES OF IMAGES TAKEN BY GULF COAST AERIAL MAPPING CO., INC., FALL 2001.
5. THE INFORMATION PRESENTED ON THIS CHART REPRESENTS THE RESULTS OF A SURVEY PERFORMED BY OCEAN SURVEYS, INC. DURING THE PERIOD NOVEMBER–DECEMBER 2001 & JANUARY 2002 AND CAN ONLY BE CONSIDERED AS INDICATING THE CONDITIONS EXISTING AT THAT TIME. REUSE OF THIS INFORMATION BY CLIENT OR OTHERS BEYOND THE SPECIFIC SCOPE OF WORK FOR WHICH IT WAS ACQUIRED SHALL BE AT THE SOLE RISK OF THE USER AND WITHOUT LIABILITY TO OSI.
6. MAGNETIC ANOMOLIES MAY REPRESENT UNDERWATER OBSTRUCTIONS, TRASH, DEBRIS OR PIPELINES. THE CONTRACTOR SHALL USE EXTREME CAUTION IN AND AROUND THESE AREAS.

NOTE: DREDGE DEPTH SHOULD BE LIMITED TO SUITABLE SAND THICKNESS CONTOUR OR 7.5' FROM EXISTING BOTTOM, WHICH EVER IS DEEPER.

DENOTES 5' DREDGE DEPTH (MAXIMUM)

DENOTES 7.5' DREDGE DEPTH (MAXIMUM)

OCEAN SURVEYS, INC.
OLD SAYBROOK, CONNECTICUT
(860) 388-4631
www.oceansurveys.com

DATE	REVISIONS	DRAWN BY	APPROVED BY
10/23/02	Final Revisions	KSP	DFB

REVISIONS

MARC J. ROGERS
REG. No. 16940
REGISTERED PROFESSIONAL ENGINEER IN CIVIL ENGINEERING
STATE OF LOUISIANA

T. BAKER SMITH & SON, INC.
SURVEYING - ENGINEERING - ENVIRONMENTAL SERVICES
P.O. BOX 2266 HOUMA, LOUISIANA 70361
(985) 868-1050 http://www.tbsmith.com

FILE NAME:	0106-882
TBS NO.:	E2001-675
DATE:	08/15/02
PLOT SCALE:	1"=1000'
DRAWN BY:	PJL
APPROVED:	DFB
OSI DRAWING NO.	01ES090.3

SUITABLE SAND THICKNESS AND MAGNETIC FIELD ANOMALIES

TIMBALIER ISLAND DUNE / MARSH RESTORATION PROJECT (TE-40)
ENGINEERING CONTRACT NO. - 2511-02-05
DEPARTMENT OF NATURAL RESOURCES
COASTAL RESTORATION DIVISION

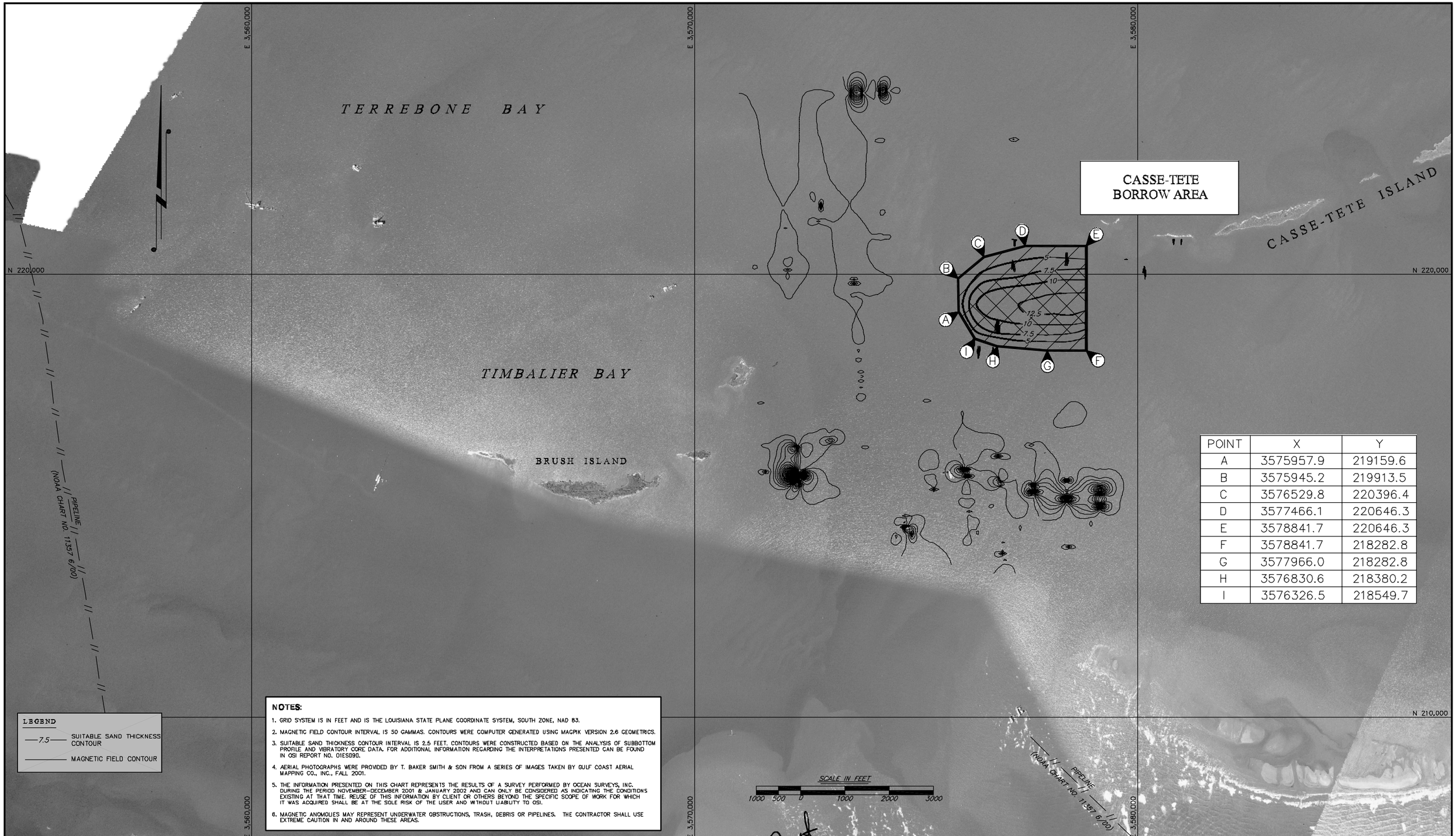

POINT	X	Y
A	3575957.9	219159.6
B	3575945.2	219913.5
C	3576529.8	220396.4
D	3577466.1	220646.3
E	3578841.7	220646.3
F	3578841.7	218282.8
G	3577966.0	218282.8
H	3576830.6	218380.2
I	3576326.5	218549.7

LEGEND

—7.5— SUITABLE SAND THICKNESS CONTOUR

MAGNETIC FIELD CONTOUR

NOTES:

1. GRID SYSTEM IS IN FEET AND IS THE LOUISIANA STATE PLANE COORDINATE SYSTEM, SOUTH ZONE, NAD 83.
2. MAGNETIC FIELD CONTOUR INTERVAL IS 50 GAMMAS. CONTOURS WERE COMPUTER GENERATED USING MAGPIK VERSION 2.6 GEOMETRICS.
3. SUITABLE SAND THICKNESS CONTOUR INTERVAL IS 2.5 FEET. CONTOURS WERE CONSTRUCTED BASED ON THE ANALYSIS OF SUBBOTTOM PROFILE AND VIBRATORY CORE DATA. FOR ADDITIONAL INFORMATION REGARDING THE INTERPRETATIONS PRESENTED CAN BE FOUND IN OSI REPORT NO. 01ES090.
4. AERIAL PHOTOGRAPHS WERE PROVIDED BY T. BAKER SMITH & SON FROM A SERIES OF IMAGES TAKEN BY GULF COAST AERIAL MAPPING CO., INC., FALL 2001.
5. THE INFORMATION PRESENTED ON THIS CHART REPRESENTS THE RESULTS OF A SURVEY PERFORMED BY OCEAN SURVEYS, INC. DURING THE PERIOD NOVEMBER–DECEMBER 2001 & JANUARY 2002 AND CAN ONLY BE CONSIDERED AS INDICATING THE CONDITIONS EXISTING AT THAT TIME. REUSE OF THIS INFORMATION BY CLIENT OR OTHERS BEYOND THE SPECIFIC SCOPE OF WORK FOR WHICH IT WAS ACQUIRED SHALL BE AT THE SOLE RISK OF THE USER AND WITHOUT LIABILITY TO OSI.
6. MAGNETIC ANOMOLIES MAY REPRESENT UNDERWATER OBSTRUCTIONS, TRASH, DEBRIS OR PIPELINES. THE CONTRACTOR SHALL USE EXTREME CAUTION IN AND AROUND THESE AREAS.

OCEAN SURVEYS, INC.
OLD SAYBROOK, CONNECTICUT
(860) 388-4631
www.oceansurveys.com

NOTE: DREDGE DEPTH SHOULD BE LIMITED TO SUITABLE SAND THICKNESS CONTOUR OR 7.5' FROM EXISTING BOTTOM, WHICH EVER IS DEEPER.

DENOTES 5' DREDGE DEPTH (MAXIMUM)

DENOTES 7.5' DREDGE DEPTH (MAXIMUM)

DATE	REVISIONS	DRAWN BY	APPROVED BY
10/23/02	Final Revisions	KSP	DFB

REVISIONS

LOUISIANA
MARC J. ROGERS
REG. No. 16940
REGISTERED
PROFESSIONAL ENGINEER
IN
CIVIL ENGINEERING

T. BAKER SMITH & SON, INC.
SURVEYING - ENGINEERING - ENVIRONMENTAL SERVICES
P.O. BOX 2265 HOUMA, LOUISIANA 70361
(985) 868-1050 http://www.tbsmith.com

FILE NAME:	01076-085
TBS NO.:	E2001-075
DATE:	08/15/02
PLOT SCALE:	1"=1000'
DRAWN BY:	PJL
APPROVED:	DFB
OSI DRAWING NO.	01ES0903

SUITABLE SAND THICKNESS AND MAGNETIC FIELD ANOMALIES

TIMBALIER ISLAND DUNE / MARSH
RESTORATION PROJECT (TE-40)
ENGINEERING CONTRACT NO. - 2511-02-05
DEPARTMENT OF NATURAL RESOURCES
COASTAL RESTORATION DIVISION

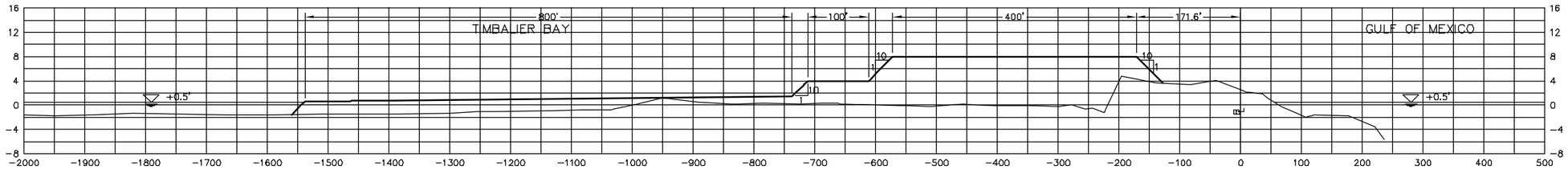

STA. 115+00

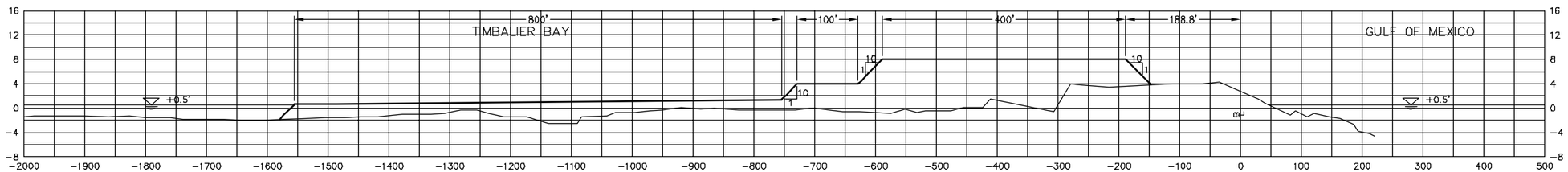

STA. 110+00

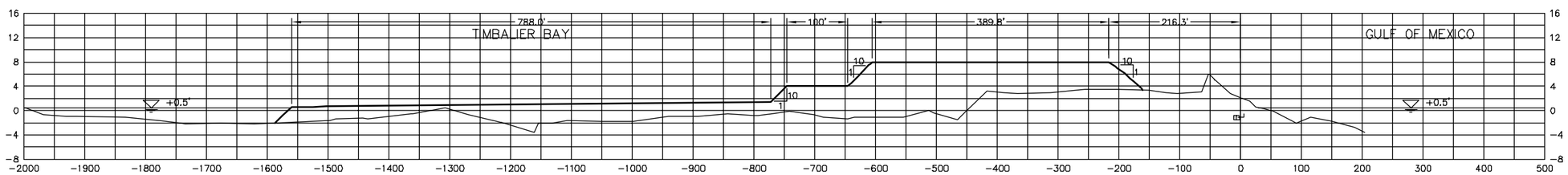

STA. 105+00

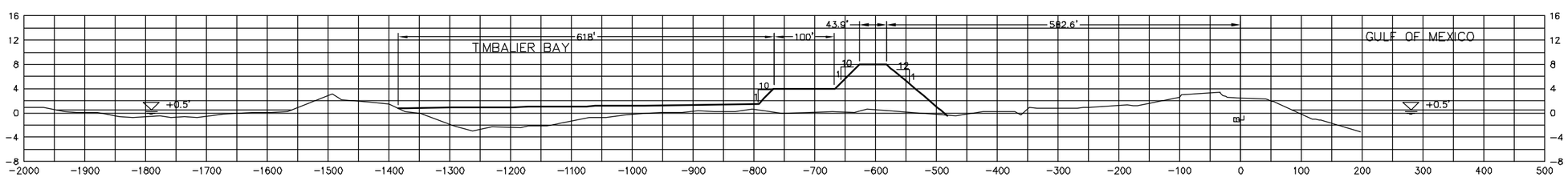

STA. 100+00

Scale: Horz. – 1"=100'
Vert. – 1"=10'

NOTES:

1) VERTICAL DATUM - NAVD 88

DATE	REVISIONS	DRAWN BY	APPROVED BY
10/23/02	Final Revisions	KSP	DFB

REVISIONS

STATE OF LOUISIANA
MARC J. ROGERS
REG. No. 16940
REGISTERED
PROFESSIONAL ENGINEER
IN
CIVIL ENGINEERING

T. BAKER SMITH & SON, INC.
SURVEYING - ENGINEERING - ENVIRONMENTAL SERVICES
P.O. BOX 2266 HOUMA, LOUISIANA 70361
(504) 868-1030 http://www.tbsmith.com

FILE NAME:	01075-X51.DWG
TBS NO.:	E2501-075
DATE:	08/01/02
PLOT SCALE:	1 = 100
DRAWN BY:	KSP
APPROVED:	DFB
MAP NO.	

CROSS SECTIONS

TIMBALIER ISLAND DUNE / MARSH RESTORATION PROJECT (TE-40)
ENGINEERING CONTRACT NO. - 2511-02-05
DEPARTMENT OF NATURAL RESOURCES
COASTAL RESTORATION DIVISION

SHEET NO. **12** OF **23**

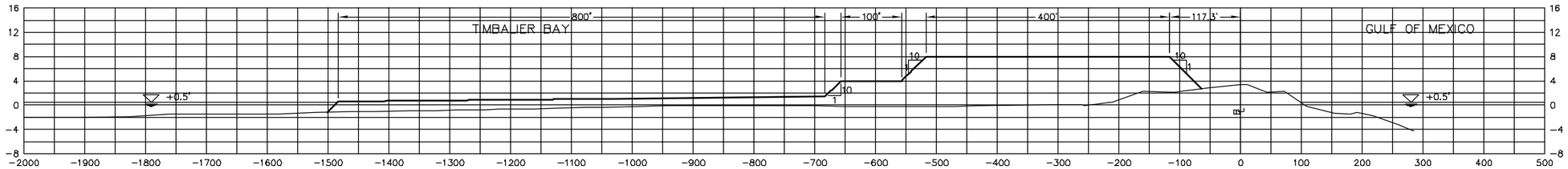

STA. 135+00

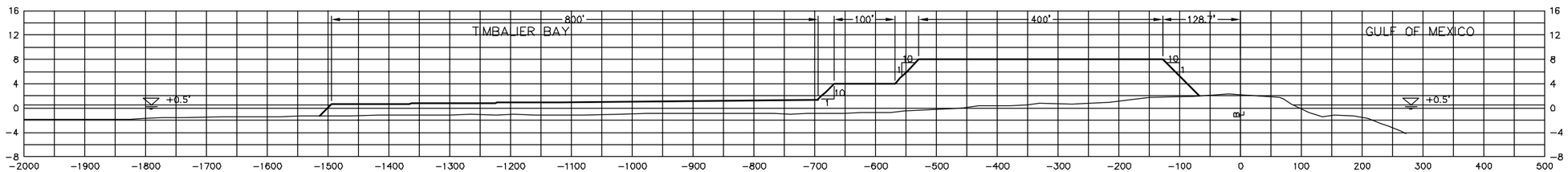

STA. 130+00

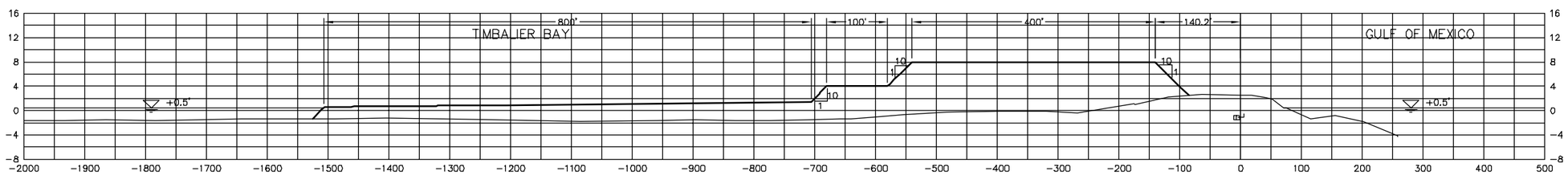

STA. 125+00

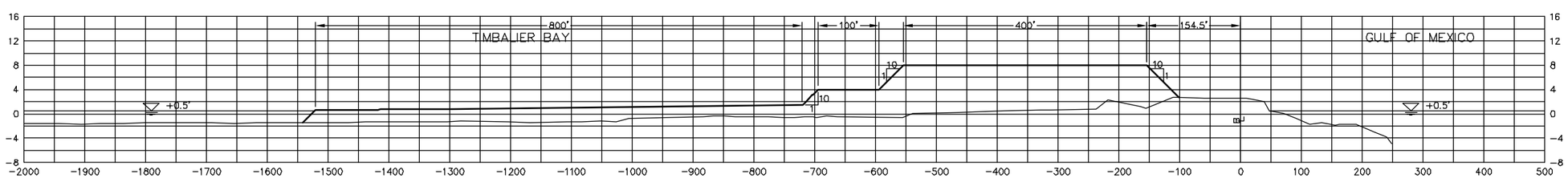

STA. 120+00

Scale: Horz. – 1"=100'
Vert. – 1"=10'

NOTES:

1) VERTICAL DATUM - NAVD 88

DATE	REVISIONS	DRAWN BY	APPROVED BY
10/23/02	Final Revisions	KSP	DFB

REVISIONS

STATE OF LOUISIANA
MARC J. ROGERS
REG. No. 16940
REGISTERED
PROFESSIONAL ENGINEER
IN
CIVIL ENGINEERING

T. BAKER SMITH & SON, INC.
SURVEYING - ENGINEERING - ENVIRONMENTAL SERVICES
P.O. BOX 2266 HOUMA, LOUISIANA 70361
(504) 868-1030 http://www.tbsandson.com

FILE NAME:	01075-X-S2.DWG
TBS NO.:	E2001-075
DATE:	08/01/02
PLOT SCALE:	1 = 100
DRAWN BY:	KSP
APPROVED:	DFB
MAP NO.	

CROSS SECTIONS

TIMBALIER ISLAND DUNE / MARSH RESTORATION PROJECT (TE-40)
ENGINEERING CONTRACT NO. - 2511-02-05
DEPARTMENT OF NATURAL RESOURCES
COASTAL RESTORATION DIVISION

SHEET NO. 13 OF 23

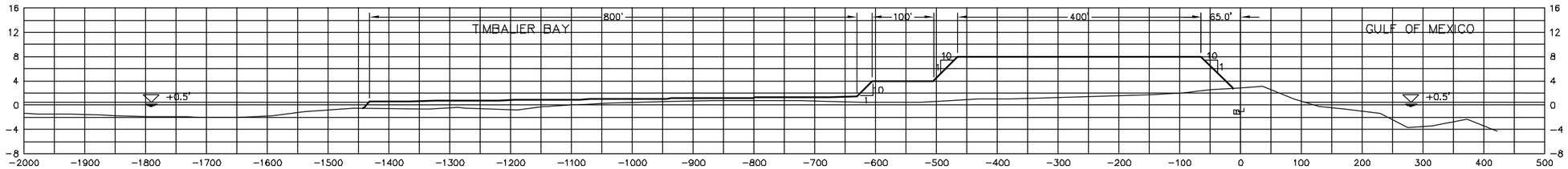

STA. 155+00

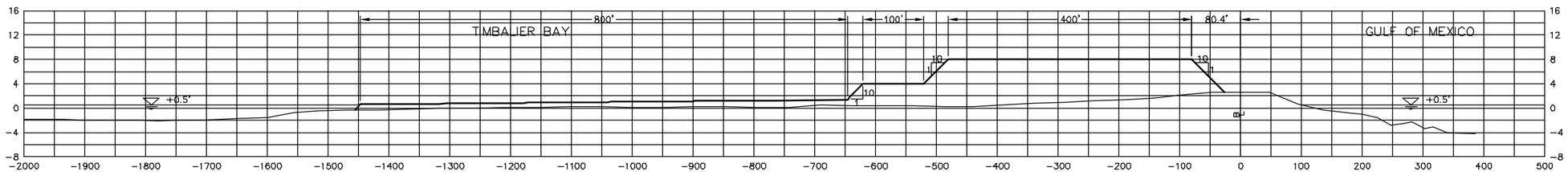

STA. 150+00

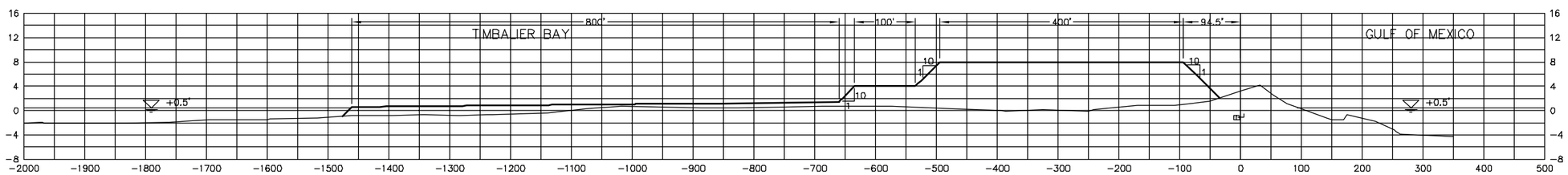

STA. 145+00

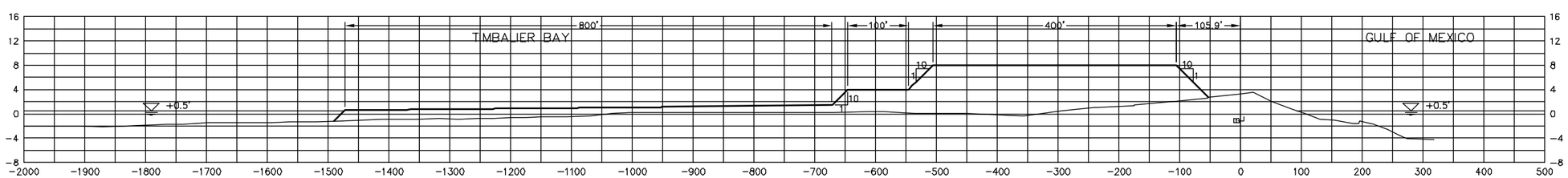

STA. 140+00

Scale: Horz. – 1"=100'
Vert. – 1"=10'

NOTES:

1) VERTICAL DATUM - NAVD 88

DATE	REVISIONS	DRAWN BY	APPROVED BY
10/23/02	Final Revisions	KSP	DFB

REVISIONS

STATE OF LOUISIANA
MARC J. ROGERS
REG. No. 16940
REGISTERED PROFESSIONAL ENGINEER IN CIVIL ENGINEERING

T. BAKER SMITH & SON, INC.
SURVEYING - ENGINEERING - ENVIRONMENTAL SERVICES
P.O. BOX 2266 HOUMA, LOUISIANA 70361
(504) 868-1030 http://www.tbsmith.com

FILE NAME:	01075-X-S3.DWG
TBS NO.:	E2501-075
DATE:	08/01/02
PLOT SCALE:	1 = 100
DRAWN BY:	KSP
APPROVED:	DFB
MAP NO.	

CROSS SECTIONS

TIMBALIER ISLAND DUNE / MARSH RESTORATION PROJECT (TE-40)
ENGINEERING CONTRACT NO. - 2511-02-05
DEPARTMENT OF NATURAL RESOURCES
COASTAL RESTORATION DIVISION

SHEET NO. **14** OF **23**

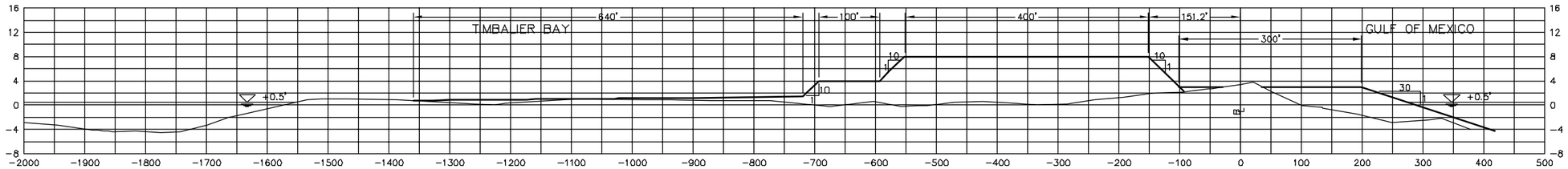

STA. 175+00

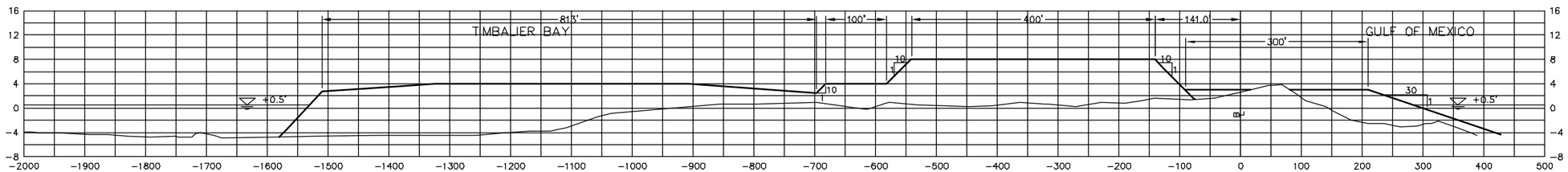

STA. 170+00

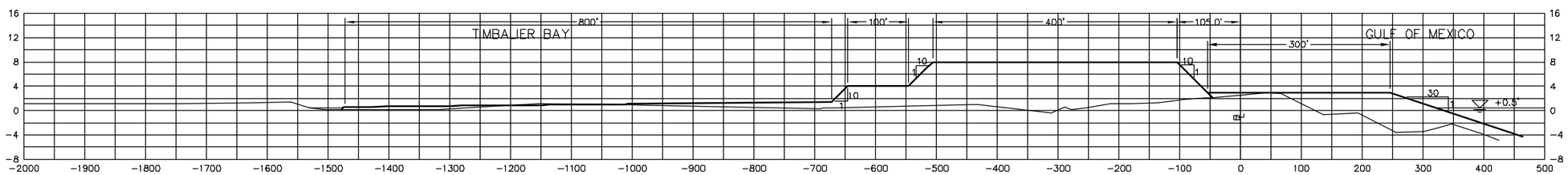

STA. 165+00

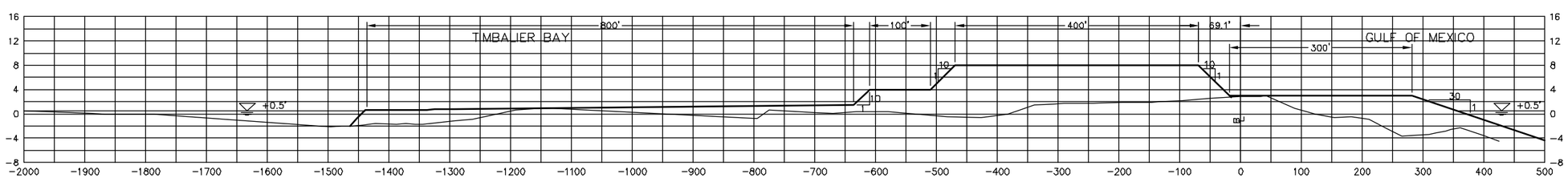

STA. 160+00

STA. 159+00 – END BEACH FILL

Scale: Horz. – 1"=100'
Vert. – 1"=10'

NOTES:

1) VERTICAL DATUM - NAVD 88

DATE	REVISIONS	DRAWN BY	APPROVED BY
10/23/02	Final Revisions	KSP	DFB

REVISIONS

STATE OF LOUISIANA
MARC J. ROGERS
REG. No. 16940
REGISTERED
PROFESSIONAL ENGINEER
IN
CIVIL ENGINEERING

T. BAKER SMITH & SON, INC.
SURVEYING - ENGINEERING - ENVIRONMENTAL SERVICES
P.O. BOX 2266 HOUMA, LOUISIANA 70361
(504) 868-1030 http://www.tbsmith.com

FILE NAME:	01075-X-S4.DWG
TBS NO.:	E2001-075
DATE:	08/01/02
PLOT SCALE:	1 = 100
DRAWN BY:	KSP
APPROVED:	DFB
MAP NO.	

CROSS SECTIONS

TIMBALIER ISLAND DUNE / MARSH RESTORATION PROJECT (TE-40)
ENGINEERING CONTRACT NO. - 2511-02-05
DEPARTMENT OF NATURAL RESOURCES
COASTAL RESTORATION DIVISION

SHEET NO. 15 OF 23

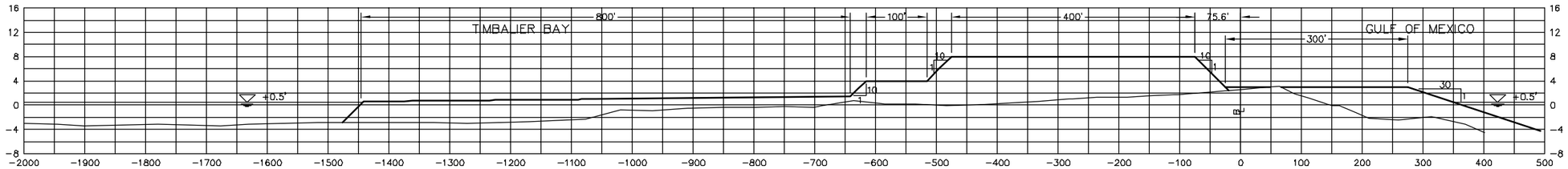

STA. 195+00

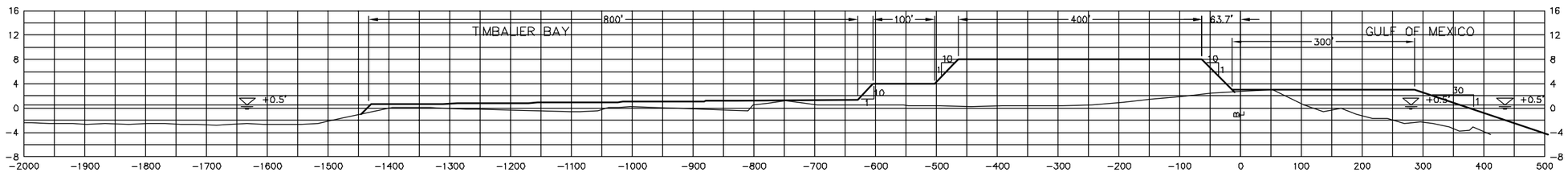

STA. 190+00

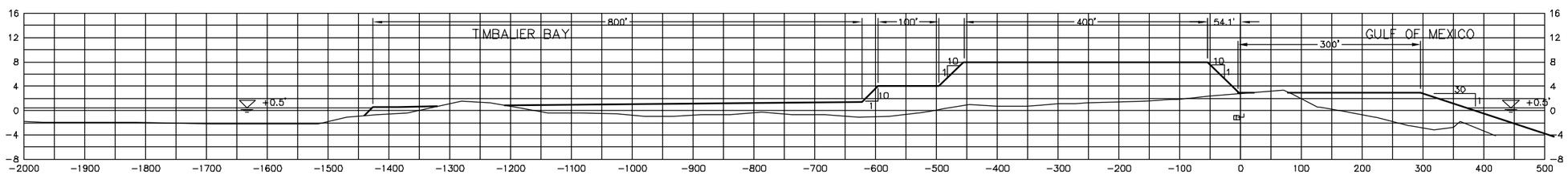

STA. 185+00

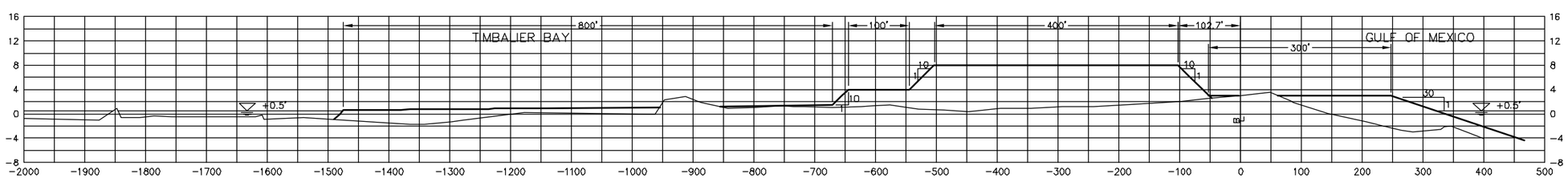

STA. 180+00

Scale: Horz. – 1"=100'
Vert. – 1"=10'

NOTES:

1) VERTICAL DATUM - NAVD 88

DATE	REVISIONS	DRAWN BY	APPROVED BY
10/23/02	Final Revisions	KSP	DFB

REVISIONS

STATE OF LOUISIANA
MARC J. ROGERS
REG. No. 16940
REGISTERED PROFESSIONAL ENGINEER IN CIVIL ENGINEERING

T. BAKER SMITH & SON, INC.
SURVEYING - ENGINEERING - ENVIRONMENTAL SERVICES
P.O. BOX 2266 HOUMA, LOUISIANA 70361
(504) 868-1030 http://www.tbsmith.com

FILE NAME:	01075-X-SS.DWG
TBS NO:	E2501-075
DATE:	08/02/02
PLOT SCALE:	1 = 100
DRAWN BY:	KSP
APPROVED:	DFB
MAP NO.	

CROSS SECTIONS

TIMBALIER ISLAND DUNE / MARSH RESTORATION PROJECT (TE-40)
ENGINEERING CONTRACT NO. - 2511-02-05
DEPARTMENT OF NATURAL RESOURCES
COASTAL RESTORATION DIVISION

SHEET NO. **16** OF **23**

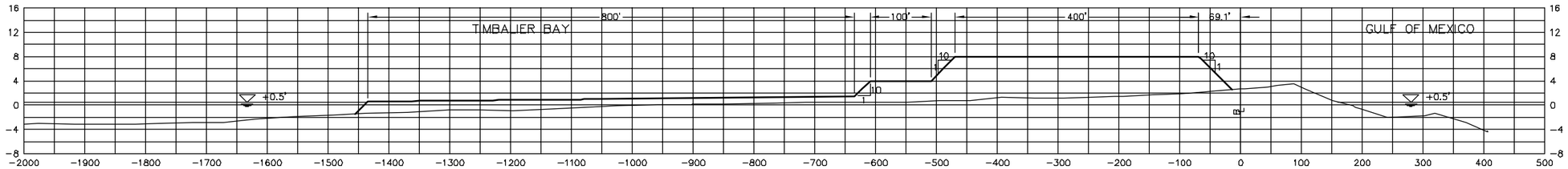

STA. 215+00

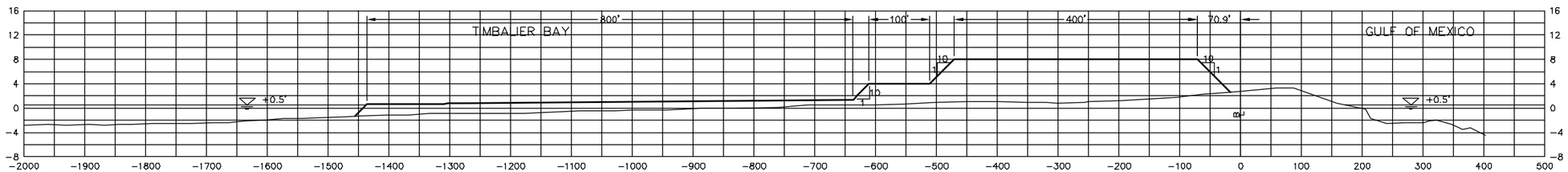

STA. 210+00

STA. 206+00 – END PROPOSAL A; CONTINUE WITH PROPOSAL B

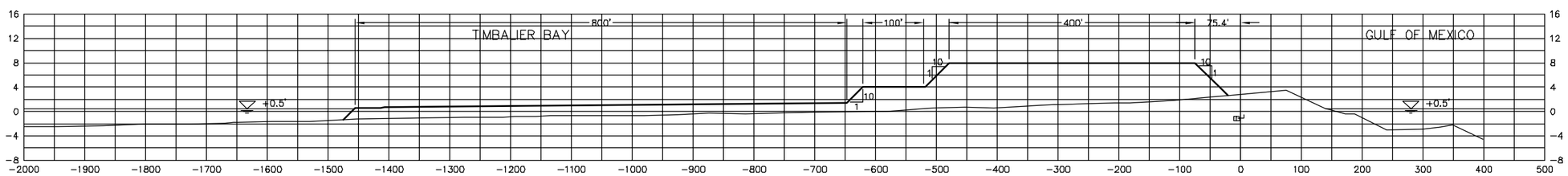

STA. 205+00

STA. 203+00 – BEGIN BEACH FILL

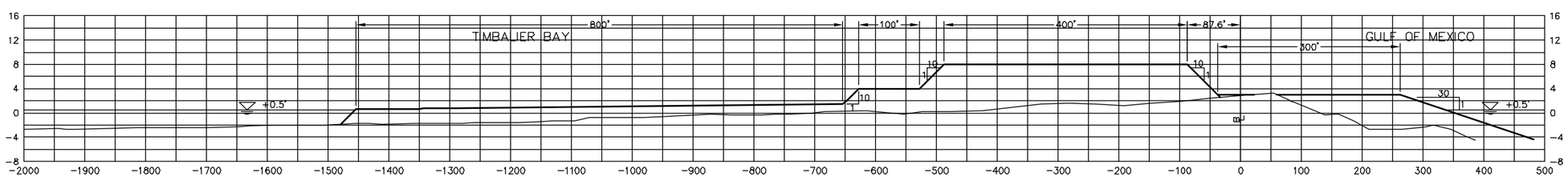

STA. 200+00

Scale: Horz. – 1"=100'
Vert. – 1"=10'

NOTES:

1) VERTICAL DATUM - NAVD 88

DATE	REVISIONS	DRAWN BY	APPROVED BY
10/23/02	Final Revisions	KSP	DFB

REVISIONS

STATE OF LOUISIANA
MARC J. ROGERS
REG. No. 16940
REGISTERED PROFESSIONAL ENGINEER IN CIVIL ENGINEERING

T. BAKER SMITH & SON, INC.
SURVEYING - ENGINEERING - ENVIRONMENTAL SERVICES
P.O. BOX 2266 HOUMA, LOUISIANA 70361
(504) 868-1030 http://www.tbsandsu.com

FILE NAME:	01075-X-S6.DWG
TBS NO.:	E2501-075
DATE:	08/02/02
PLOT SCALE:	1 = 100
DRAWN BY:	KSP
APPROVED:	DFB
MAP NO.	

CROSS SECTIONS

TIMBALIER ISLAND DUNE / MARSH
RESTORATION PROJECT (TE-40)
ENGINEERING CONTRACT NO. - 2511-02-05
DEPARTMENT OF NATURAL RESOURCES
COASTAL RESTORATION DIVISION

SHEET NO. 17 OF 23

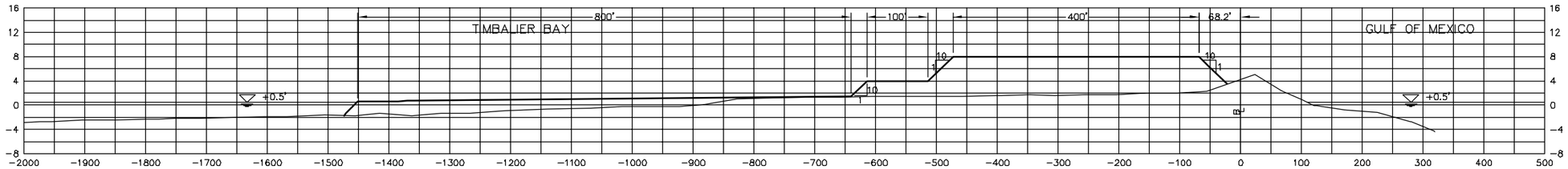

STA. 235+00

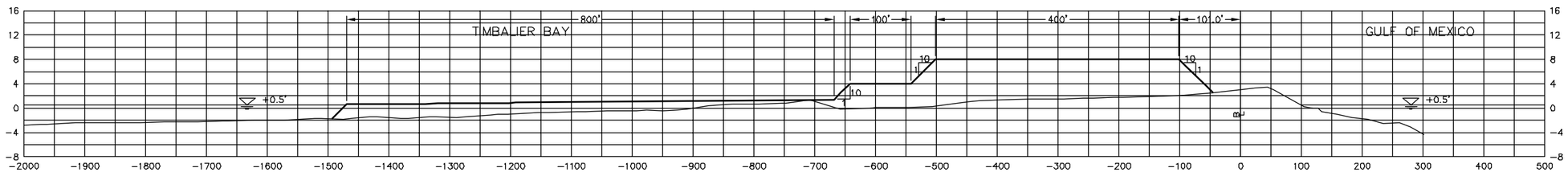

STA. 230+00

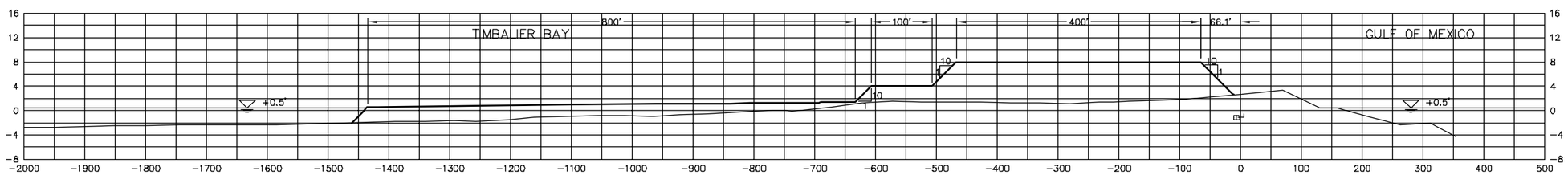

STA. 225+00

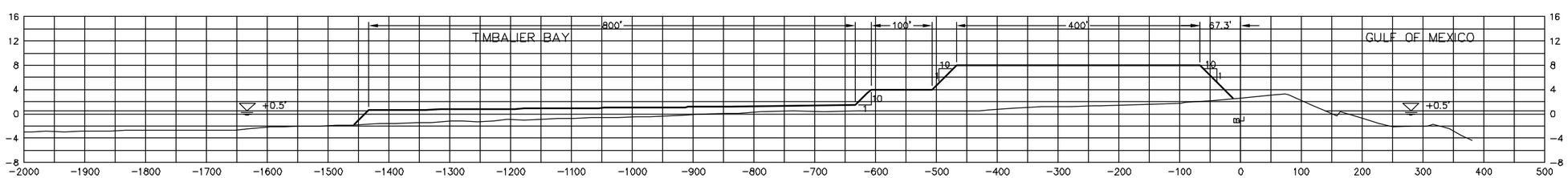

STA. 220+00

Scale: Horz. – 1"=100'
Vert. – 1"=10'

NOTES:

1) VERTICAL DATUM - NAVD 88

DATE	REVISIONS	DRAWN BY	APPROVED BY
10/23/02	Final Revisions	KSP	DFB

REVISIONS

STATE OF LOUISIANA
MARC J. ROGERS
REG. No. 16940
REGISTERED
PROFESSIONAL ENGINEER
IN
CIVIL ENGINEERING

T. BAKER SMITH & SON, INC.
SURVEYING - ENGINEERING - ENVIRONMENTAL SERVICES
P.O. BOX 2266 HOUMA, LOUISIANA 70361
(504) 868-1030 http://www.tbsmith.com

FILE NAME:	01075-X57.DWG
TBS NO.:	E2001-075
DATE:	08/02/02
PLOT SCALE:	1 = 100
DRAWN BY:	KSP
APPROVED:	DFB
MAP NO.	

CROSS SECTIONS

TIMBALIER ISLAND DUNE / MARSH RESTORATION PROJECT (TE-40)
ENGINEERING CONTRACT NO. - 2511-02-05
DEPARTMENT OF NATURAL RESOURCES
COASTAL RESTORATION DIVISION

SHEET NO. **18** OF **23**

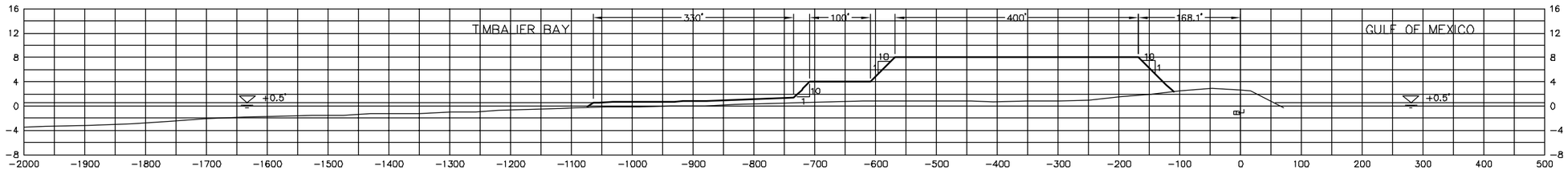

STA. 249+99.84

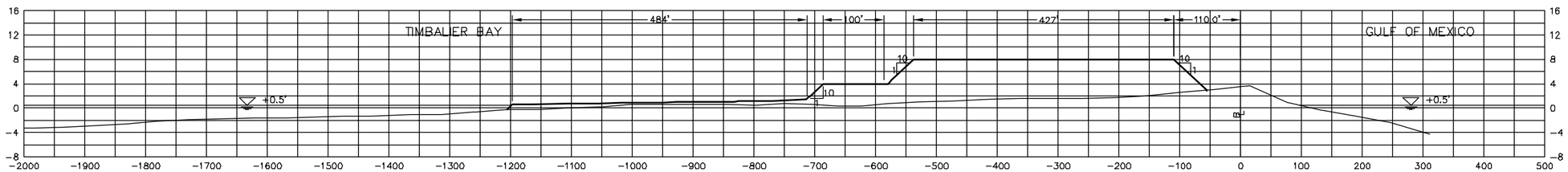

STA. 245+00

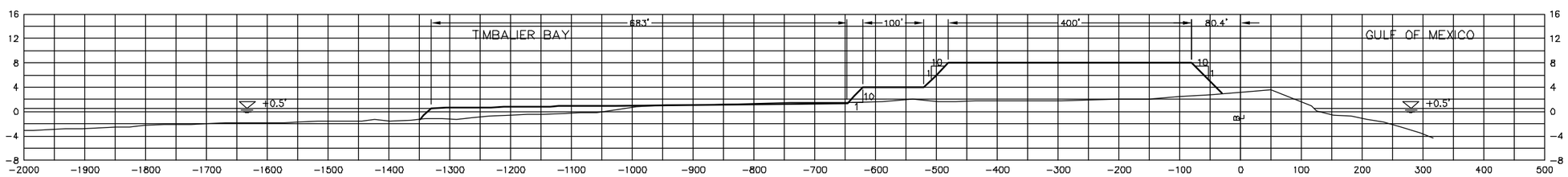

STA. 240+00

Scale: Horz. – 1"=100'
Vert. – 1"=10'

NOTES:

1) VERTICAL DATUM - NAVD 88

DATE	REVISIONS	DRAWN BY	APPROVED BY
10/23/02	Final Revisions	KSP	DFB

REVISIONS

STATE OF LOUISIANA
MARC J. ROGERS
REG. No. 16940
REGISTERED
PROFESSIONAL ENGINEER
IN
CIVIL ENGINEERING

T. BAKER SMITH & SON, INC.
SURVEYING - ENGINEERING - ENVIRONMENTAL SERVICES
P.O. BOX 2266 HOUMA, LOUISIANA 70361
(504) 868-1050 http://www.tbsmith.com

FILE NAME:	01075-X88.DWG
TBS NO.:	E2001-075
DATE:	08/02/02
PLOT SCALE:	1 = 100
DRAWN BY:	KSP
APPROVED:	DFB
MAP NO.	

CROSS SECTIONS

TIMBALIER ISLAND DUNE / MARSH
RESTORATION PROJECT (TE-40)
ENGINEERING CONTRACT NO. - 2511-02-05
DEPARTMENT OF NATURAL RESOURCES
COASTAL RESTORATION DIVISION

SHEET NO. 19 OF 23

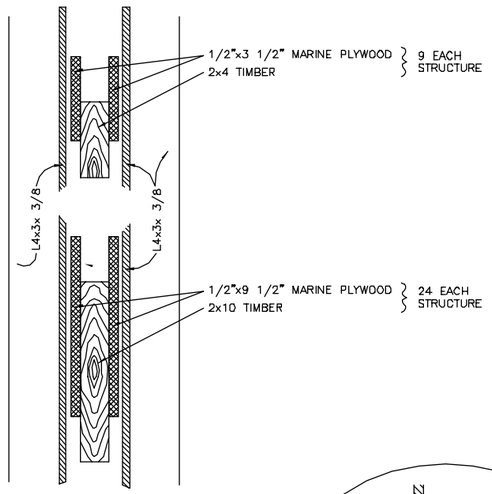

WEIR BOARD DETAIL
SCALE 1"=3"

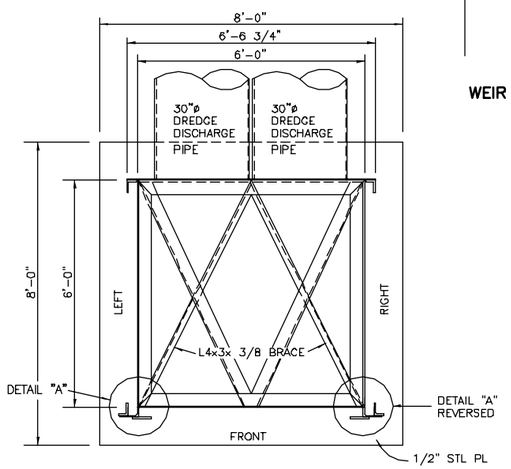

TOP VIEW
SCALE 1/2"=1'-0"

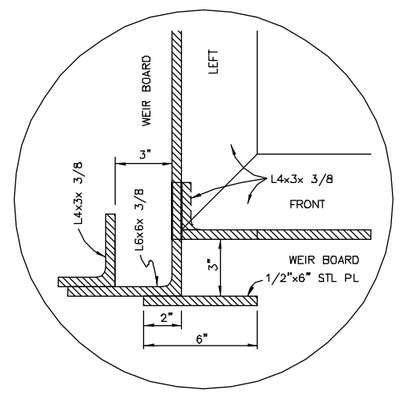

DETAIL "A"
SCALE 1"=3"

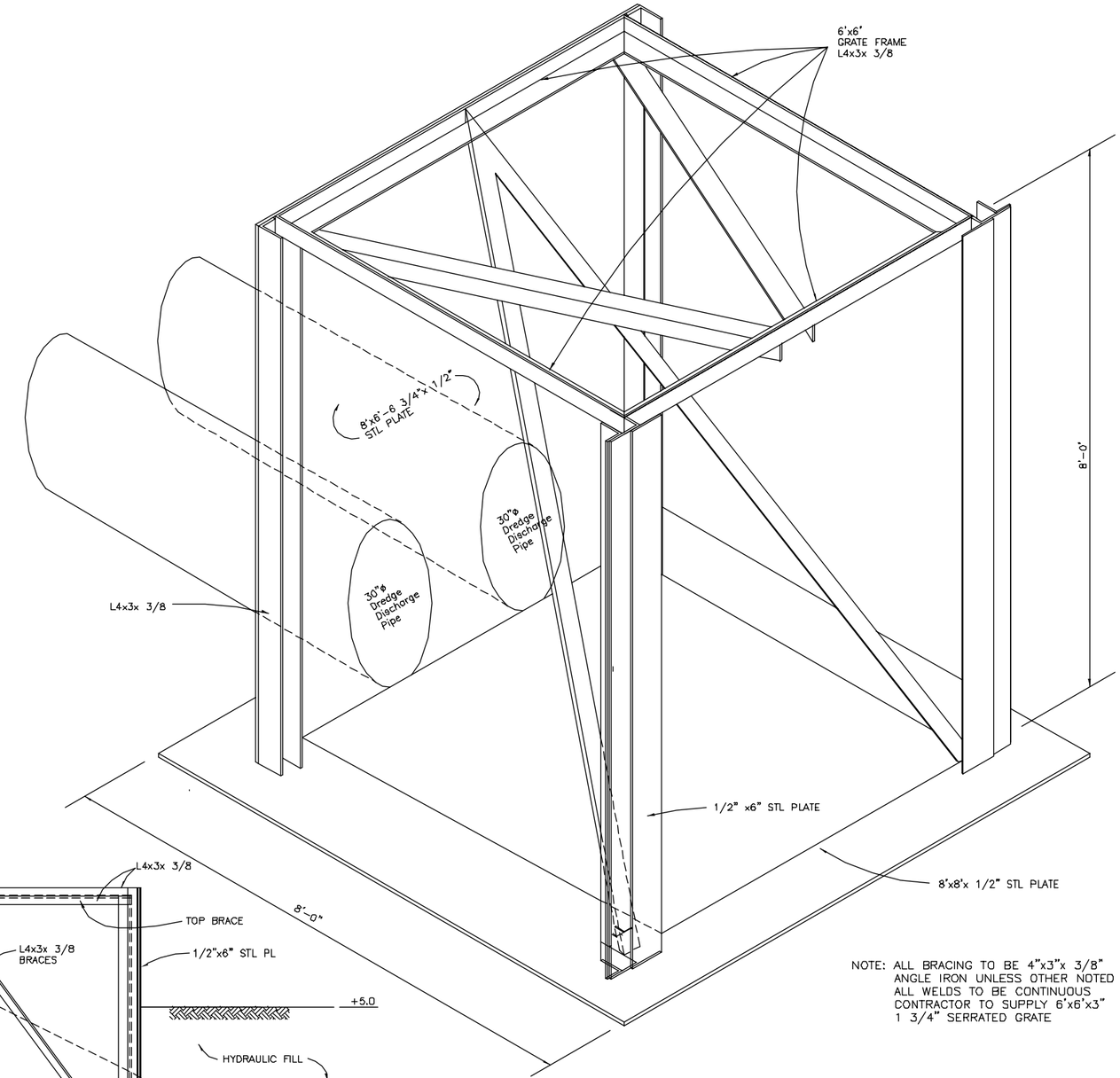

NOTE: ALL BRACING TO BE 4"x3"x 3/8" ANGLE IRON UNLESS OTHER NOTED
ALL WELDS TO BE CONTINUOUS
CONTRACTOR TO SUPPLY 6'x6'x3" 1 3/4" SERRATED GRATE

FRAME DETAIL ISOMETRIC VIEW
SCALE 1/4"=1'-0"

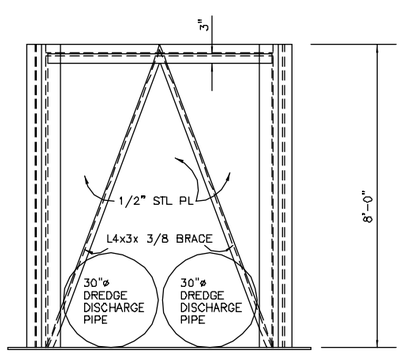

FRONT VIEW
SCALE 1/2"=1'-0"

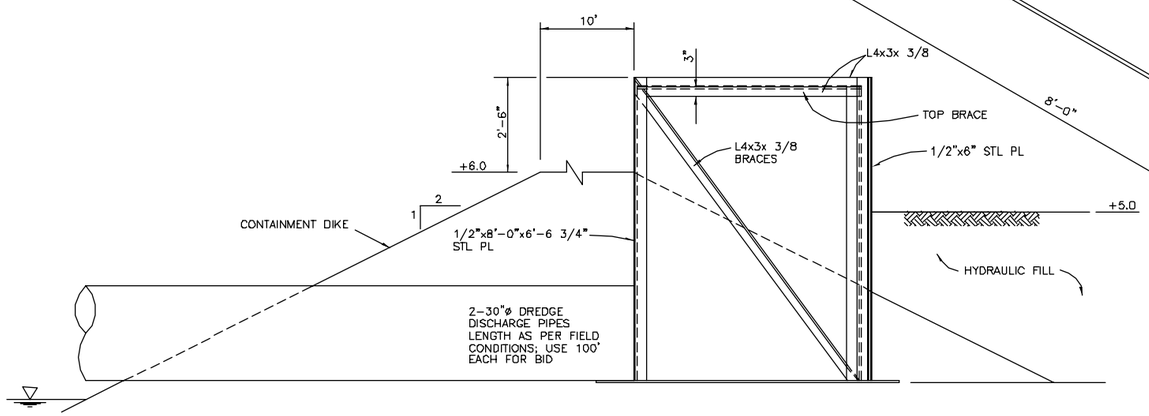

LEFT VIEW
SCALE 1/2"= 1'-0"

NOTES:

DATE	REVISIONS	DRAWN BY	APPROVED BY
10/23/02	Final Revisions	KSP	DFB

REVISIONS

STATE OF LOUISIANA
MARC J. ROGERS
REG. No. 16940
REGISTERED PROFESSIONAL ENGINEER IN CIVIL ENGINEERING

T. BAKER SMITH & SON, INC.
SURVEYING - ENGINEERING - ENVIRONMENTAL SERVICES
P.O. BOX 2255 HOUMA, LOUISIANA 70361
(985) 868-1050 http://www.tbsmith.com

FILE NAME:	01075-WeirBox
TBS NO.:	E2001-075
DATE:	08/19/02
PLOT SCALE:	1=24
DRAWN BY:	KSP
APPROVED:	DFB
MAP NO.	

OVERFLOW WEIR BOX AND DETAILS

TIMBALIER ISLAND DUNE / MARSH RESTORATION PROJECT (TE-40)
ENGINEERING CONTRACT NO. - 2511-02-05
DEPARTMENT OF NATURAL RESOURCES
COASTAL RESTORATION DIVISION

SHEET NO. 20 OF 23

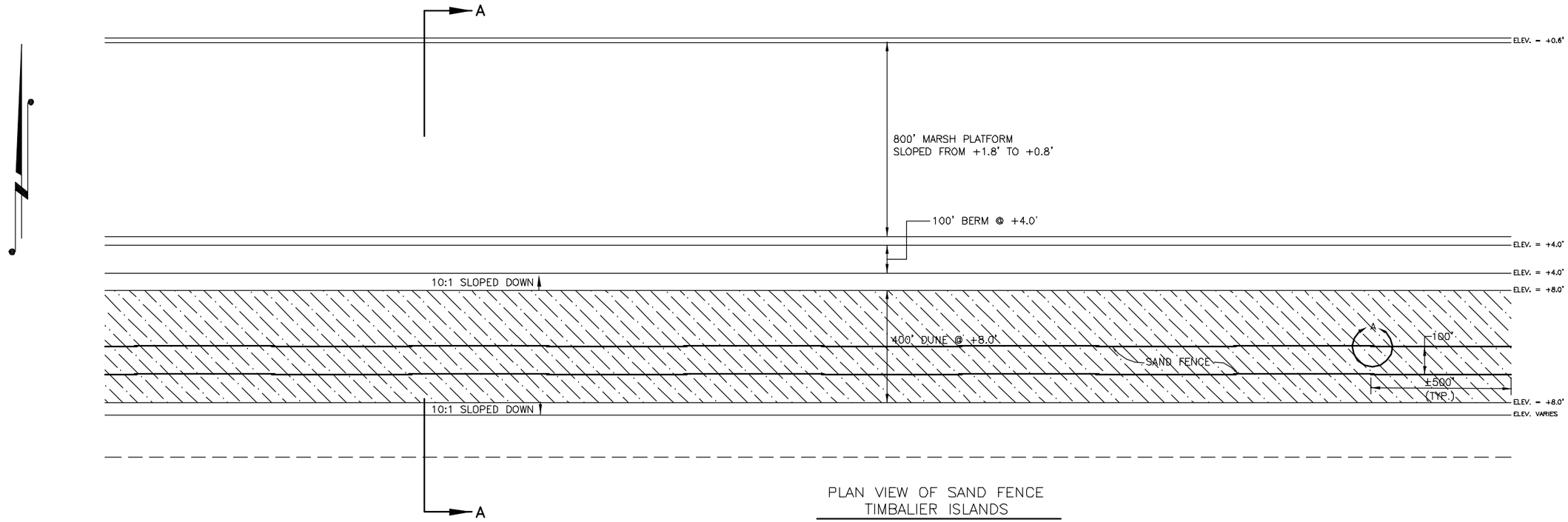

PLAN VIEW OF SAND FENCE
TIMBALIER ISLANDS
SCALE: 1" = 200'

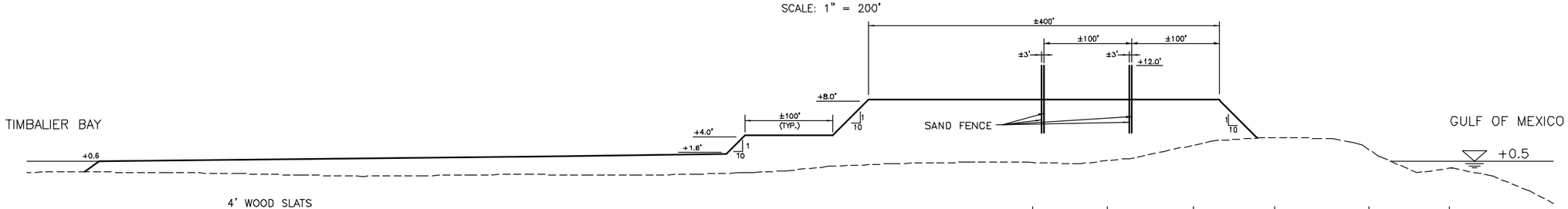

SECTION A – A
N.T.S.

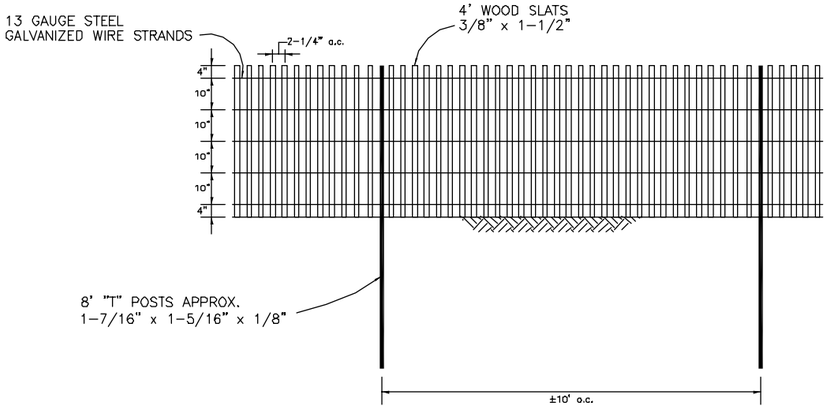

SAND FENCE DETAIL
SCALE: 1" = 2'

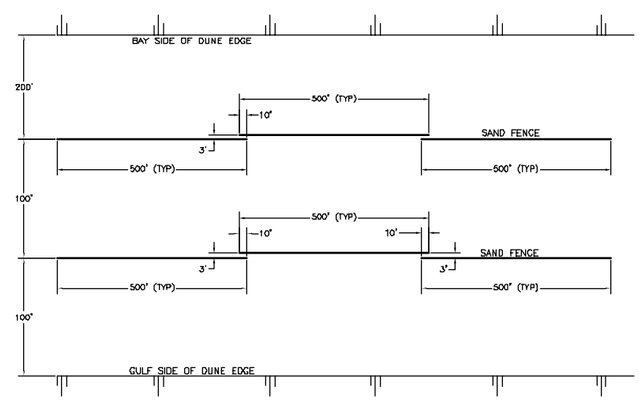

DETAIL 'A'
not to scale

NOTES:

1) VERTICAL DATUM - NAVD 88

2) SAND FENCING SHALL BE PARALLEL WITH THE DUNE AND SHALL BE PLACED THE ENTIRE LENGTH OF THE DUNE.

DATE	REVISIONS	DRAWN BY	APPROVED BY
11/03/03	Revised Sand Fencing Detail	KSP	DFB
10/23/02	Final Revisions	KSP	DFB

REVISIONS

MARC J. ROGERS
REG. No. 16940
REGISTERED
PROFESSIONAL ENGINEER
IN
CIVIL ENGINEERING

T. BAKER SMITH & SON, INC.
SURVEYING - ENGINEERING - ENVIRONMENTAL SERVICES
P.O. BOX 2265 HOUMA, LOUISIANA 70361
(985) 868-1050 http://www.tbsmith.com

FILE NAME:	01075-Sand Fence
TBS NO.:	E2001-075
DATE:	08/15/02
PLOT SCALE:	1"=100'
DRAWN BY:	KSP
APPROVED:	DFB
MAP NO.	

TYPICAL SAND FENCING LAYOUT

TIMBALIER ISLAND DUNE / MARSH
RESTORATION PROJECT (TE-40)
ENGINEERING CONTRACT NO. - 2511-02-05
DEPARTMENT OF NATURAL RESOURCES
COASTAL RESTORATION DIVISION

SHEET NO. 21 OF 23

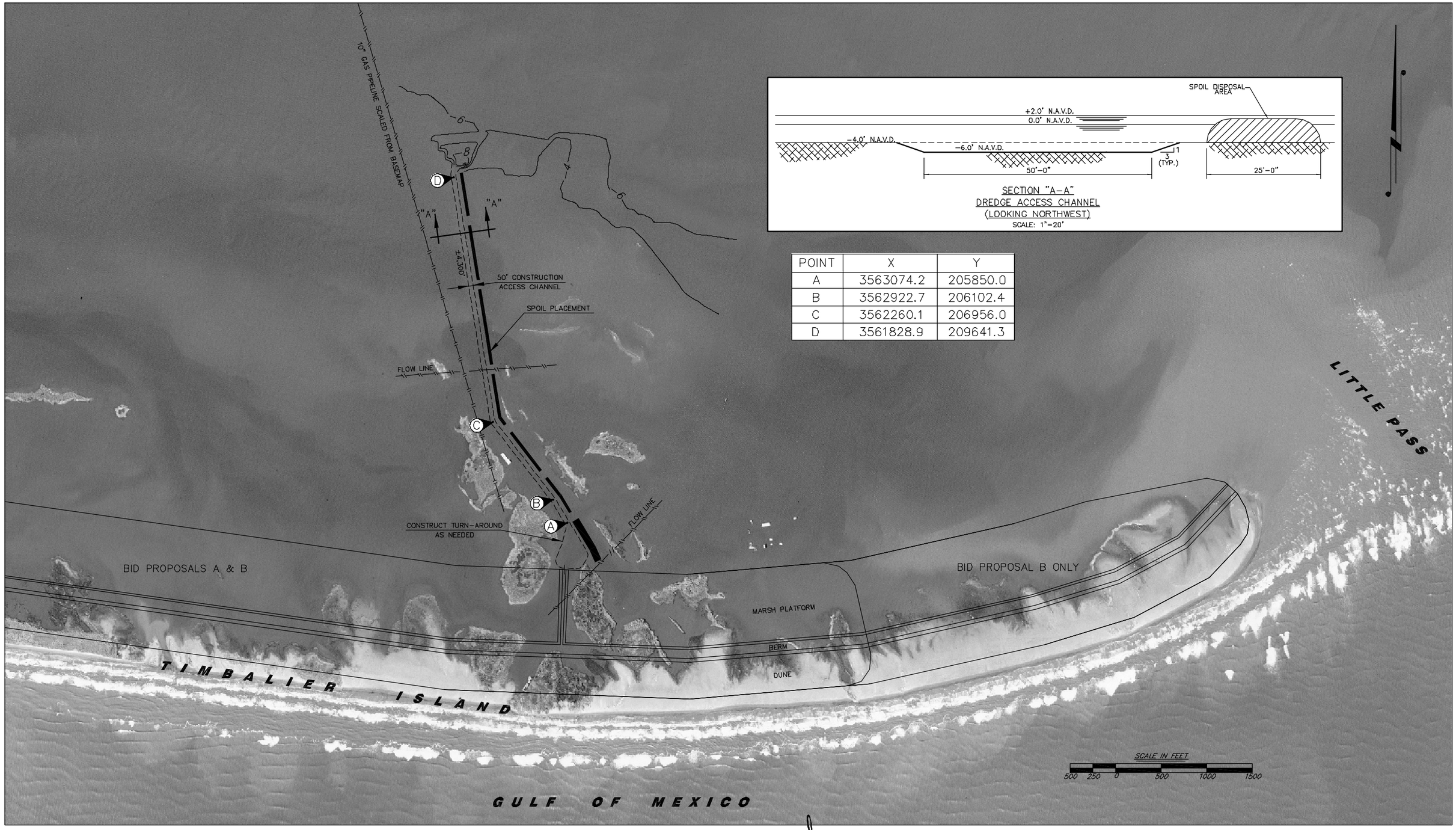

POINT	X	Y
A	3563074.2	205850.0
B	3562922.7	206102.4
C	3562260.1	206956.0
D	3561828.9	209641.3

NOTES:
1) Aerials flown on October 14, 2001. at an altitude of 18,000'.
2) HORIZONTAL DATUM - NAD 83
VERTICAL DATUM - NAVD 88

DATE	REVISIONS	DRAWN BY	APPROVED BY
10/23/02	Final Revisions	KSP	DFB

REVISIONS

STATE OF LOUISIANA
MARC J. ROGERS
REG. No. 16940
REGISTERED
PROFESSIONAL ENGINEER
IN
CIVIL ENGINEERING

T. BAKER SMITH & SON, INC.
SURVEYING - ENGINEERING - ENVIRONMENTAL SERVICES
P.O. BOX 2266 HOUMA, LOUISIANA 70361
(985) 868-1050 http://www.tbsmith.com

FILE NAME:	01073-A00006
TBS NO.:	E2001-075
DATE:	08/16/02
PLOT SCALE:	1"=500'
DRAWN BY:	KSP
APPROVED:	DFB
MAP NO.	

CONSTRUCTION ACCESS AND BUCKET DREDGE DETAILS

TIMBALIER ISLAND DUNE / MARSH
RESTORATION PROJECT (TE-40)
ENGINEERING CONTRACT NO. - 2511-02-05
DEPARTMENT OF NATURAL RESOURCES
COASTAL RESTORATION DIVISION

SHEET NO. 22 OF 23

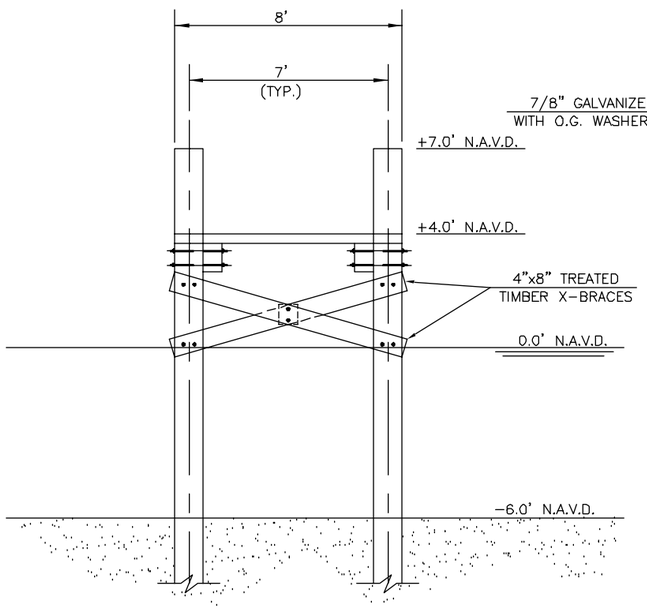

SECTION A-A
WHARF DETAIL (TIMBER)

SCALE: 3/8"=1'-0"

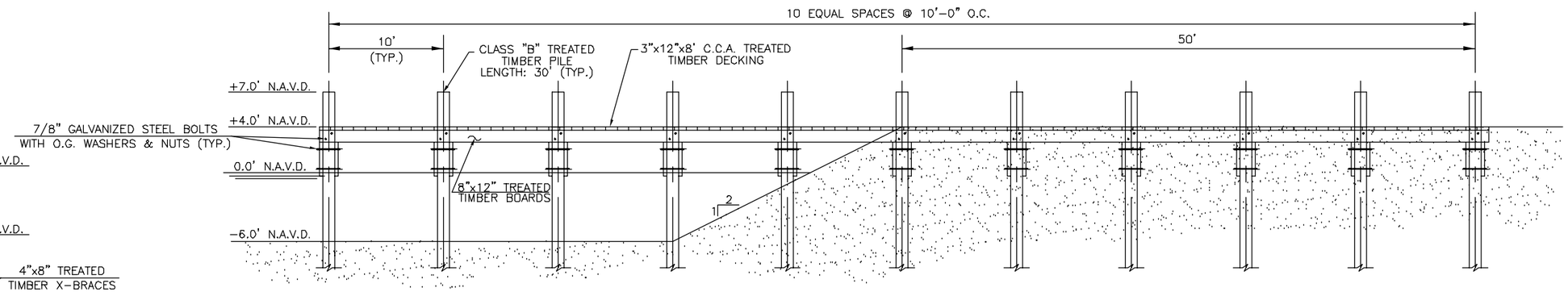

ELEVATION VIEW
TIMBALIER ISLAND WHARF FACILITY

SCALE: 3/16"=1'-0"

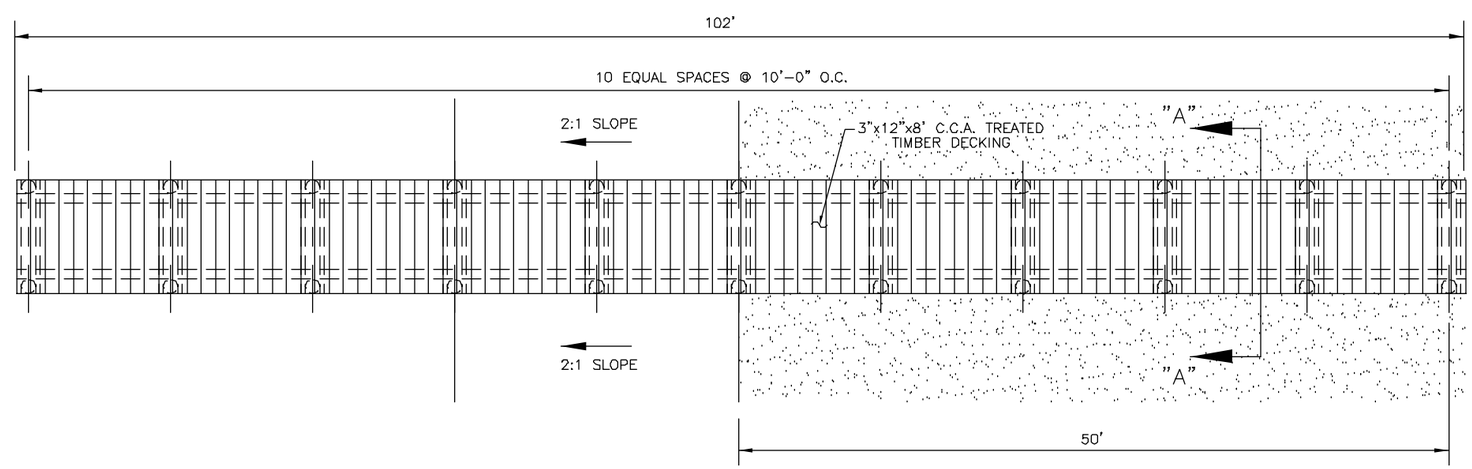

PLAN VIEW

SCALE: 3/16"=1'-0"

1) DIMENSIONS SHOWN ARE PLAN DIMENSIONS AND ALLOWANCES MAY BE MADE TO ADJUST TO FIELD CONDITIONS WITH THE APPROVAL OF THE ENGINEER.

2) ALL TREATED TIMBER AND PILES SHALL BE NEW, GRADE 2 OR BETTER SIZED AS SHOWN. 20 PCF CREOSOTE OR 2.5 PCF CCA TREATMENT AS CALLED FOR IN THE PLANS.

3) DECK BOARDS SHALL BE 3"x12"x8' 2.5 PCF CCA TREATMENT GRADE 2 OR BETTER, FINISHED ON FOUR SIDES (S45)

4) ALL HARDWARE AND MATERIALS FOR ALL SPLICE CONNECTIONS ARE TO BE INSTALLED AT NO DIRECT PAY.

5) ALL GALVANIZED STEEL HARDWARE SHALL BE HOT-DIPPED GALVANIZED, SIZED AS REQUIRED IN THE FIELD. BOLTS SHALL BE ASTM A-307.

6) ALL TIMBER SHALL BE CREOSOTE TREATED UNLESS DESIGNATED ON PLANS ABOVE.

NOTES:

1) HORIZONTAL DATUM - NAD 83
VERTICAL DATUM - NAVD 88

DATE	REVISIONS	DRAWN BY	APPROVED BY

REVISIONS

STATE OF LOUISIANA
MARC J. ROGERS
REG. No. 16940
REGISTERED
PROFESSIONAL ENGINEER
IN
CIVIL ENGINEERING

T. BAKER SMITH & SON, INC.
SURVEYING - ENGINEERING - ENVIRONMENTAL SERVICES
P.O. BOX 2266 HOUMA, LOUISIANA 70361
(985) 868-1050 http://www.tbsmith.com

FILE NAME:	01075-Wharf
TBS NO.:	E2001-075
DATE:	08/16/02
PLOT SCALE:	1=64
DRAWN BY:	KSP
APPROVED:	DFB
MAP NO.	

WHARF DETAILS

TIMBALIER ISLAND DUNE / MARSH RESTORATION PROJECT (TE-40)
ENGINEERING CONTRACT NO. - 2511-02-05
DEPARTMENT OF NATURAL RESOURCES
COASTAL RESTORATION DIVISION

SHEET NO. 23 OF 23