STATE OF LOUISIANA
COASTAL PROTECTION AND RESTORATION AUTHORITY

COLE'S BAYOU
MARSH RESTORATION PROJECT
TV-63
VERMILION PARISH

INDEX TO SHEETS

SHEET NO.	DESCRIPTION
1	TITLE SHEET
2	GENERAL NOTES
3	PROJECT LAYOUT
4	EQUIPMENT ACCESS CORRIDOR LAYOUT
5	BORROW AREA PLAN VIEW
6	MARSH CREATION AREAS 1 & 2 PLAN VIEW
7	MARSH CREATION AREA 3 PLAN VIEW
8	EQUIPMENT ACCESS TYPICAL SECTIONS
9	DREDGE PIPELINE CORRIDOR & CROSSINGS TYPICAL SECTIONS
10	DREDGE PIPELINE CROSSING & BORROW AREA TYPICAL SECTIONS
11 - 12	MARSH CREATION AREA TYPICAL SECTIONS
13	WATER STRUCTURE 1 PLAN, PROFILE & SECTION
14	WATER STRUCTURE 2 PLAN, PROFILE & SECTION
15	WATER STRUCTURE 3 PLAN, PROFILE & SECTION
16	EARTHEN PLUG 3 PLAN, PROFILE & SECTION
17	WATER STRUCTURE 4 PLAN, PROFILE & SECTION
18	WATER STRUCTURE 5 PLAN, PROFILE & SECTION
19	WATER STRUCTURE 6 PLAN, PROFILE & SECTION
20	EARTHEN PLUG 6 PLAN, PROFILE & SECTION
21	WATER STRUCTURE 7 PLAN, PROFILE & SECTION
22	WATER STRUCTURE 8 PLAN, PROFILE & SECTION
23	WATER STRUCTURE 9 PLAN, PROFILE & SECTION
24	TIMBER PILE DETAILS
25	SETTLEMENT PLATE DETAILS
26	GRADE STAKE & INLINE CHECK VALVE DETAILS
27	DESIGN SURVEY LAYOUT
28	CONSTRUCTION SURVEY LAYOUT
29-32	BORROW AREA SECTIONS
33	MARSH CREATION AREA 1 SECTIONS
34-36	MARSH CREATION AREA 2 SECTIONS
37-43	MARSH CREATION AREA 3 SECTIONS
44-50	EQUIPMENT ACCESS SECTIONS

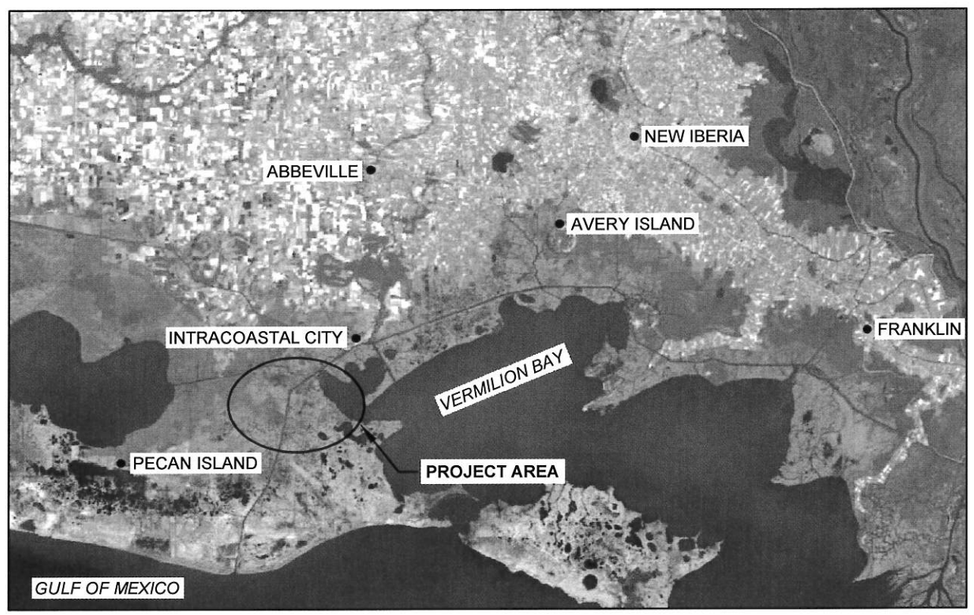

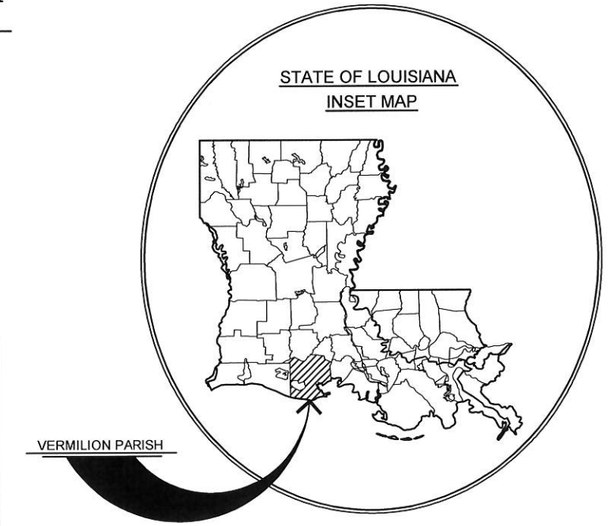

LICENSURE CLASSIFICATION REQUIREMENTS
MAJOR CLASSIFICATION: HEAVY CONSTRUCTION
SUBCLASSIFICATION: DREDGING

STATE OF LOUISIANA
AMANDA M. TAYLOR
License No. 41999
PROFESSIONAL ENGINEER
IN
CIVIL ENGINEERING
2/12/2018

STATE OF LOUISIANA
SHANNON McCLAIN HAYNES
License No. 30552
PROFESSIONAL ENGINEER
IN
CIVIL ENGINEERING
2/12/2018

REV.	DATE	DESCRIPTION	BY

COASTAL PROTECTION AND RESTORATION AUTHORITY
150 TERRACE AVENUE
BATON ROUGE, LOUISIANA 70802

TITLE SHEET

DESIGNED BY: AMANDA TAYLOR, P.E. - 0041999
APPROVED BY: SHANNON HAYNES, P.E. - 0030552

COLE'S BAYOU
MARSH RESTORATION PROJECT

STATE PROJECT NUMBER: TV-63
DRAWN BY: KRISTI CANTU

DATE: FEB. 2018

SHEET 1 OF 50

GENERAL NOTES:

1. THE EQUIPMENT ACCESS TO THE PROJECT SITE SHALL BE THROUGH NAVIGABLE WATERWAYS AND SHALL NOT IMPACT EXISTING WATER BOTTOMS OR WETLANDS UNLESS OTHERWISE NOTED.
2. PLANS AND SPECIFICATIONS ARE COMPLEMENTARY; WHAT IS REQUIRED BY ONE IS BINDING AS IF REQUIRED BY ALL. CLARIFICATIONS AND INTERPRETATIONS OF, OR NOTIFICATIONS OF MINOR VARIATIONS AND DEVIATIONS IN THE CONTRACT DOCUMENTS, WILL BE ISSUED BY THE ENGINEER.
3. THE CONTRACTOR SHALL MAINTAIN AIDS TO NAVIGATION DURING CONSTRUCTION AND HAVE ADEQUATE NAVIGATIONAL EQUIPMENT ON THE DREDGE TO AVOID DREDGING IN RESTRICTED AREAS. ANY DAMAGE TO EXISTING AIDS TO NAVIGATION SHALL BE REPAIRED BY THE CONTRACTOR TO U.S. COAST GUARD STANDARDS AT THE EXPENSE OF THE CONTRACTOR.
4. THE MARSH CREATION AREAS, BORROW AREAS, CONTAINMENT DIKES, AND WATER CONTROL STRUCTURES MAY BE REVISED BY THE ENGINEER THROUGHOUT THE WORK TO REFLECT CHANGES IN FIELD CONDITIONS.
5. THE CONTRACTOR SHALL PERFORM A MAGNETOMETER SURVEY OF THE DREDGE PIPELINE CORRIDOR, BORROW AREAS, WATER CONTROL STRUCTURES, ACCESS CHANNELS, AND MARSH CREATION AREAS PRIOR TO EXCAVATION OR DREDGING. DRAWINGS SHOWING THE TRACK LINES, COORDINATES, AMPLITUDE, SIGNATURE TYPE, AND DURATION OF ALL INFRASTRUCTURE AND ANOMALIES SHALL BE SUBMITTED TO THE ENGINEER IN THE PRECONSTRUCTION SURVEY.
6. THE CONTRACTOR IS RESPONSIBLE FOR CONTAINING THE HYDRAULICALLY DREDGED MATERIAL WITHIN THE BOUNDARIES OF THE MARSH CREATION AREAS.
7. THE BACKGROUND IMAGERY WAS TAKEN IN 2012.
8. THE PIPELINE AND UTILITY LOCATIONS SHOWN ON THE PLANS ARE APPROXIMATE. THE CONTRACTOR SHALL LOCATE AND MARK ALL PIPELINES AND UTILITIES LOCATED WITHIN 250 FT. OF THE WORK PRIOR TO BEGINNING CONSTRUCTION. THE CONTRACTOR SHALL MAINTAIN THESE MARKERS DURING CONSTRUCTION. VERIFIED PIPELINES REFERENCE THE PIPELINE LOCATION (X, Y, Z) DATA BASED IN THE DESIGN SURVEY(S).

NOTIFICATIONS:

1. THE CONTRACTOR SHALL BE RESPONSIBLE FOR NOTIFYING THE FOLLOWING PIPELINE AND UTILITY OPERATORS AT LEAST FIVE (5) WORKING DAYS IN ADVANCE OF THE WORK. CALL LOUISIANA ONE CALL AT 1-800-272-3020 5 DAYS PRIOR TO ANY EXCAVATION AND/OR DREDGING TO LOCATE ALL PIPELINES OR UTILITIES.

   ENTERPRISE PRODUCTS (FOR ACADIAN PIPELINE COMPANY)
   CONTACT: LEONARD THURMOND
   PHONE: (281) 887-3322

   TRANSCANADA PIPELINE LIMITED
   CONTACT: CHRIS MENEFEE
   PHONE: (615) 920-2480

2. THE CONTRACTOR SHALL NOTIFY THE LANDOWNERS LISTED BELOW AT LEAST FIVE (5) WORKING DAYS PRIOR TO PERFORMING THE WORK.

   E.A. MCILHENNY ENTERPRISES
   CONTACT: RANDY MORTLE, EDWARD M. SIMMONS
   PHONE: (337) 365-8173

   VERMILION CORPORATION
   CONTACT: BILLY BROUSSARD
   PHONE: (337) 400-0952

   NATIONAL AUDUBON SOCIETY
   CONTACT: TIM VINCENT
   PHONE: (337) 893-8810

3. MODIFICATIONS TO THE DREDGE PIPELINE CORRIDOR AND EQUIPMENT ACCESS CORRIDOR SHALL REQUIRE APPROVAL BY THE ENGINEER.

DESIGN NOTES:

1. ALL ELEVATIONS ARE GIVEN IN THE NORTH AMERICAN VERTICAL DATUM OF 1988 (NAVD 88) U.S. SURVEY FEET, GEOID 12A. ALL HORIZONTAL COORDINATES ARE GIVEN IN THE NORTH AMERICAN DATUM OF 1983 (NAD 83, LOUISIANA STATE PLANE SOUTH ZONE U.S. FEET). ALL ELEVATIONS ARE BASED ON THE FOLLOWING:

SECONDARY SURVEY MONUMENT	ELEVATION	NORTHING	EASTING
TV12-SM-01	2.69'	456,955.08	3,005,295.33

2. THE EXISTING ELEVATIONS SHOWN ON THE PLANS ARE BASED ON THE DESIGN SURVEYS PERFORMED FROM APRIL 2013 THROUGH JUNE 2013 AND OCTOBER 2014 THROUGH NOVEMBER 2014 BY HYDRO-TERRA TECHNOLOGIES. THE DESIGN SURVEY REPORT IS PROVIDED IN THE SPECIFICATIONS.
3. DATA FROM STATION CRMS2041 WAS USED TO CALCULATE THE MHW AND MLW. ELEVATIONS ARE REFERENCED TO NAVD 88, US FEET, GEOID 12A. MHW = +0.68' AND MLW = +0.48' WITHIN PROJECT AREA AND MHW = 1.86' AND MLW = 1.15' IN LITTLE VERMILION BAY AND MHW = 0.92' AND MLW = -0.12 IN OIL FIELD CANALS.
4. A GEOTECHNICAL INVESTIGATION WAS PERFORMED BY ARDAMAN & ASSOCIATES ON FEBRUARY 2013 TO APRIL 2013. THE BORING LOCATIONS ARE SHOWN ON THE PLANS. THE GEOTECHNICAL INVESTIGATION REPORT IS PROVIDED IN THE SPECIFICATIONS.

LEGEND - SECTION VIEWS

- NON-WOVEN GEOTEXTILE FABRIC AND ARTICULATED CONCRETE BLOCK MAT
- CONSTRUCTED MARSH AND IN-SITU FILL
- EARTHEN CONTAINMENT DIKE
- EARTHEN CONTAINMENT, EARTHEN PLUG, EQUIPMENT ACCESS, MARSH CREATION
- EXISTING WATER BOTTOM
- REHANDLING AREA
- TEMPORARY SPOIL
- WATER CONTROL STRUCTURE BORROW AREA AND CUT

SUMMARY OF ESTIMATED QUANTITIES

ITEM No.	DESCRIPTION	UNIT	ESTIMATED QUANTITY[1]
1	HYDRAULIC DREDGE MOBILIZATION/DEMOBILIZATION (TS-100)	LS	1
2	DREDGE PIPELINE MOBILIZATION, INSTALLATION & DEMOBILIZATION (TS-101)	LS	1
3	GENERAL MOBILIZATION/DEMOBILIZATION (TS-102)	LS	1
4	SURVEYS (TS-210)	LS	1
5	GRADE STAKES (TS-220)	EACH	87
6	SETTLEMENT PLATES (TS-250)	EACH	8
7	INSTRUMENTED SETTLEMENT PLATES (TS-251)	LS	1
8	EARTHEN CONTAINMENT DIKES (TS-300)	LF	41,571
9	EARTH WORK (TS-310)	LS	1
10	MARSH CREATION BORROW AREA ACCESS CORRIDOR (TS-330)	LS	1
11	HYDRAULIC DREDGING AND MARSH FILL (TS-400)[2]	CY	1,190,689
12	CORRUGATED METAL PIPE (TS-510)	LF	1,240
13	INLINE CHECK VALVE (TS-520)	EACH	21
14	NON-WOVEN GEOTEXTILE (TS-640)	SY	8,120
15	ARTICULATED CONCRETE BLOCK MAT (TS-750)	SY	7,390
16	TREATED TIMBER PILES (TS-950)	EACH	220
17	TREATED TIMBER (TS-955)	MBFM	7.8

1. THE QUANTITIES SHOWN WERE CALCULATED FROM THE DESIGN SURVEY. THE OWNER RESERVES THE RIGHT TO ADJUST QUANTITIES 25% HIGHER OR LOWER WITHOUT ADJUSTMENT OF THE UNIT PRICE.
2. QUANTITY IS BASED ON THE BORROW AREA CUT VOLUMES. PAYMENT QUANTITY WILL BE BASED ON PROCESS SURVEYS OF THE MARSH CREATION BORROW AREA.

LEGEND - PLAN VIEWS

- ARMORED EARTHEN CONTAINMENT DIKE
- BOARD MATS
- DREDGE PIPELINE CORRIDOR
- EARTHEN CONTAINMENT DIKE
- EARTHEN CONTAINMENT DIKE BORROW AREA
- EARTHEN PLUG
- EQUIPMENT ACCESS CORRIDOR
- GRADE STAKE
- INSTRUMENTED SETTLEMENT PLATE
- MAGNETOMETER ANOMALY
- MARSH CREATION AREA
- MARSH CREATION BORROW AREA
- MARSH CREATION BORROW AREA ACCESS CORRIDOR
- MARSH NOURISHMENT AREA
- SP-1 SETTLEMENT PLATE
- B-1 SOIL BORING
- SURVEY MONUMENT
- SURVEY TRANSECT
- TEMPORARY SPOIL
- PL VERIFIED PIPELINE
- UNVERIFIED PIPELINE
- WATER CONTROL STRUCTURE

ABBREVIATIONS:

ACB	ARTICULATED CONCRETE BLOCK
CMF	CONSTRUCTED MARSH FILL
CPT	CONE PENETRATION TEST
CY	CUBIC YARD
DP	DREDGE PIPELINE
DPC	DREDGE PIPE CORRIDOR
EAC	EQUIPMENT ACCESS CORRIDOR
ECD	EARTHEN CONTAINMENT DIKE
ECDBA	EARTHEN CONTAINMENT DIKE BORROW AREA
EP	EARTHEN PLUG
EL	ELEVATION
FT	FOOT
ISP	INSTRUMENTED SETTLEMENT PLATE
LF	LINEAR FOOT
LS	LUMP SUM
MBFM	THOUSAND BOARD FEET MEASURE
MCA	MARSH CREATION AREA
MCBA	MARSH CREATION BORROW AREA
MNA	MARSH NOURISHMENT AREA
NTS	NOT TO SCALE
PL	PIPELINE
SB	SOIL BORING
SF	SQUARE FOOT
SM	SURVEY MONUMENT
SP	SETTLEMENT PLATE
ST	SURVEY TRANSECT
SY	SQUARE YARD
TS	TEMPORARY SPOIL
WCS	WATER CONTROL STRUCTURE

STATE OF LOUISIANA
SHANNON McCLAIN HAYNES
License No. 30552
PROFESSIONAL ENGINEER IN CIVIL ENGINEERING
2/15/2018

STATE OF LOUISIANA
AMANDA M TAYLOR
License No 41999
PROFESSIONAL ENGINEER IN CIVIL ENGINEERING
2/15/2018

REV.	DATE	DESCRIPTION	BY

COASTAL PROTECTION AND RESTORATION AUTHORITY
150 TERRACE AVENUE
BATON ROUGE, LOUISIANA 70802

GENERAL NOTES

DESIGNED BY: AMANDA TAYLOR, P.E. - 0041999
APPROVED BY: SHANNON HAYNES, P.E. - 0030552

COLE'S BAYOU MARSH RESTORATION PROJECT

STATE PROJECT NUMBER: TV-63
DRAWN BY: KRISTI CANTU

DATE: FEB. 2018
SHEET 2 OF 50

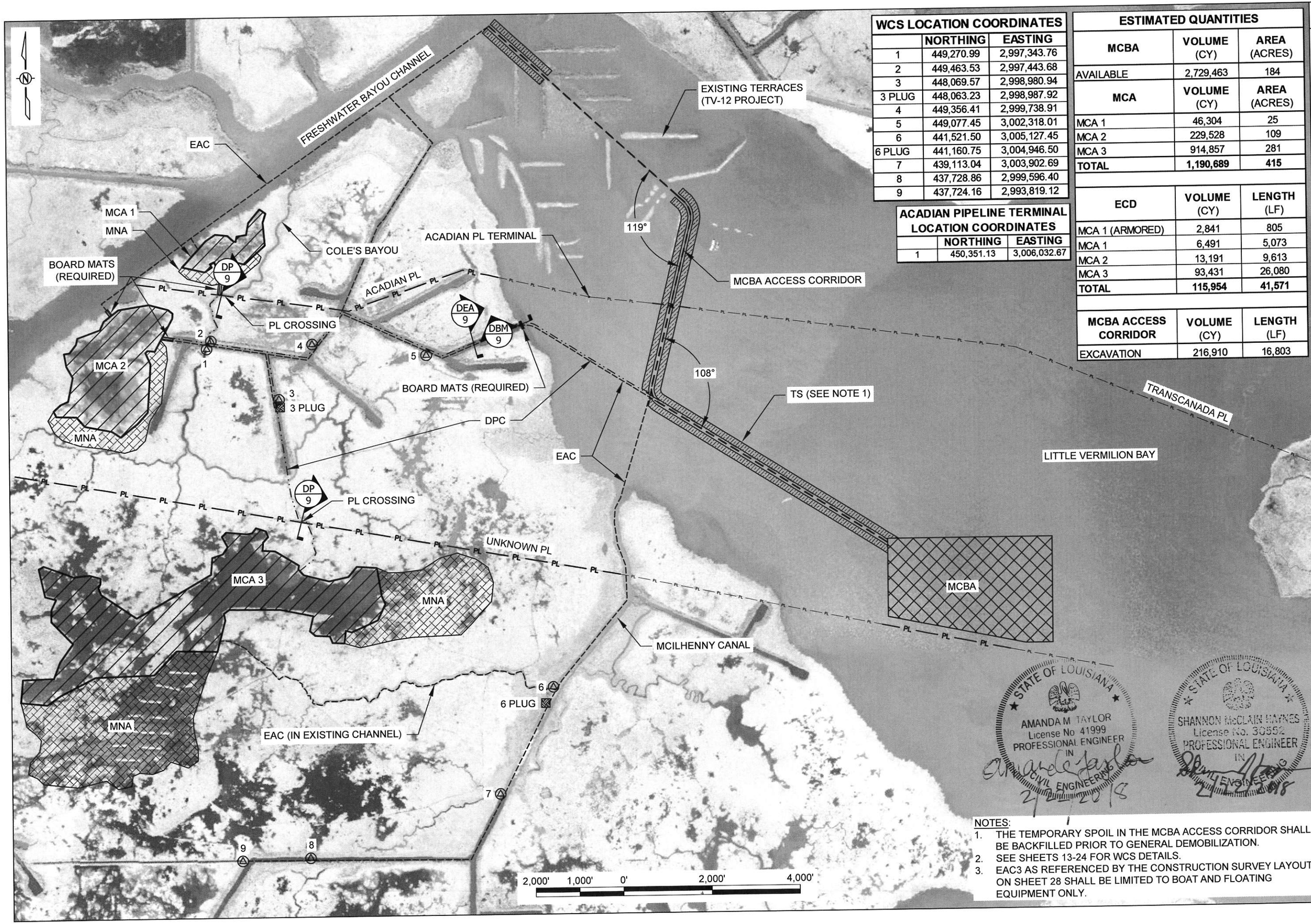

WCS LOCATION COORDINATES		
	NORTHING	EASTING
1	449,270.99	2,997,343.76
2	449,463.53	2,997,443.68
3	448,069.57	2,998,980.94
3 PLUG	448,063.23	2,998,987.92
4	449,356.41	2,999,738.91
5	449,077.45	3,002,318.01
6	441,521.50	3,005,127.45
6 PLUG	441,160.75	3,004,946.50
7	439,113.04	3,003,902.69
8	437,728.86	2,999,596.40
9	437,724.16	2,993,819.12

ACADIAN PIPELINE TERMINAL LOCATION COORDINATES		
	NORTHING	EASTING
1	450,351.13	3,006,032.67

ESTIMATED QUANTITIES		
MCBA	VOLUME (CY)	AREA (ACRES)
AVAILABLE	2,729,463	184
MCA	VOLUME (CY)	AREA (ACRES)
MCA 1	46,304	25
MCA 2	229,528	109
MCA 3	914,857	281
TOTAL	**1,190,689**	**415**
ECD	VOLUME (CY)	LENGTH (LF)
MCA 1 (ARMORED)	2,841	805
MCA 1	6,491	5,073
MCA 2	13,191	9,613
MCA 3	93,431	26,080
TOTAL	**115,954**	**41,571**
MCBA ACCESS CORRIDOR	VOLUME (CY)	LENGTH (LF)
EXCAVATION	216,910	16,803

NOTES:
1. THE TEMPORARY SPOIL IN THE MCBA ACCESS CORRIDOR SHALL BE BACKFILLED PRIOR TO GENERAL DEMOBILIZATION.
2. SEE SHEETS 13-24 FOR WCS DETAILS.
3. EAC3 AS REFERENCED BY THE CONSTRUCTION SURVEY LAYOUT ON SHEET 28 SHALL BE LIMITED TO BOAT AND FLOATING EQUIPMENT ONLY.

STATE OF LOUISIANA
AMANDA M TAYLOR
License No 41999
PROFESSIONAL ENGINEER
IN
CIVIL ENGINEERING
2/12/2018

STATE OF LOUISIANA
SHANNON McCLAIN HAYNES
License No. 30552
PROFESSIONAL ENGINEER
IN
CIVIL ENGINEERING
2/12/2018

REV.	DATE	DESCRIPTION	BY

COASTAL PROTECTION AND RESTORATION AUTHORITY
150 TERRACE AVENUE
BATON ROUGE, LOUISIANA 70802

PROJECT LAYOUT

DESIGNED BY: AMANDA TAYLOR, P.E. - 0014999
APPROVED BY: SHANNON HAYNES, P.E. - 0030552

COLE'S BAYOU
MARSH CREATION PROJECT

STATE PROJECT NUMBER: TV-63
DRAWN BY: KRISTI CANTU

DATE: FEB. 2018

SHEET 3 OF 50

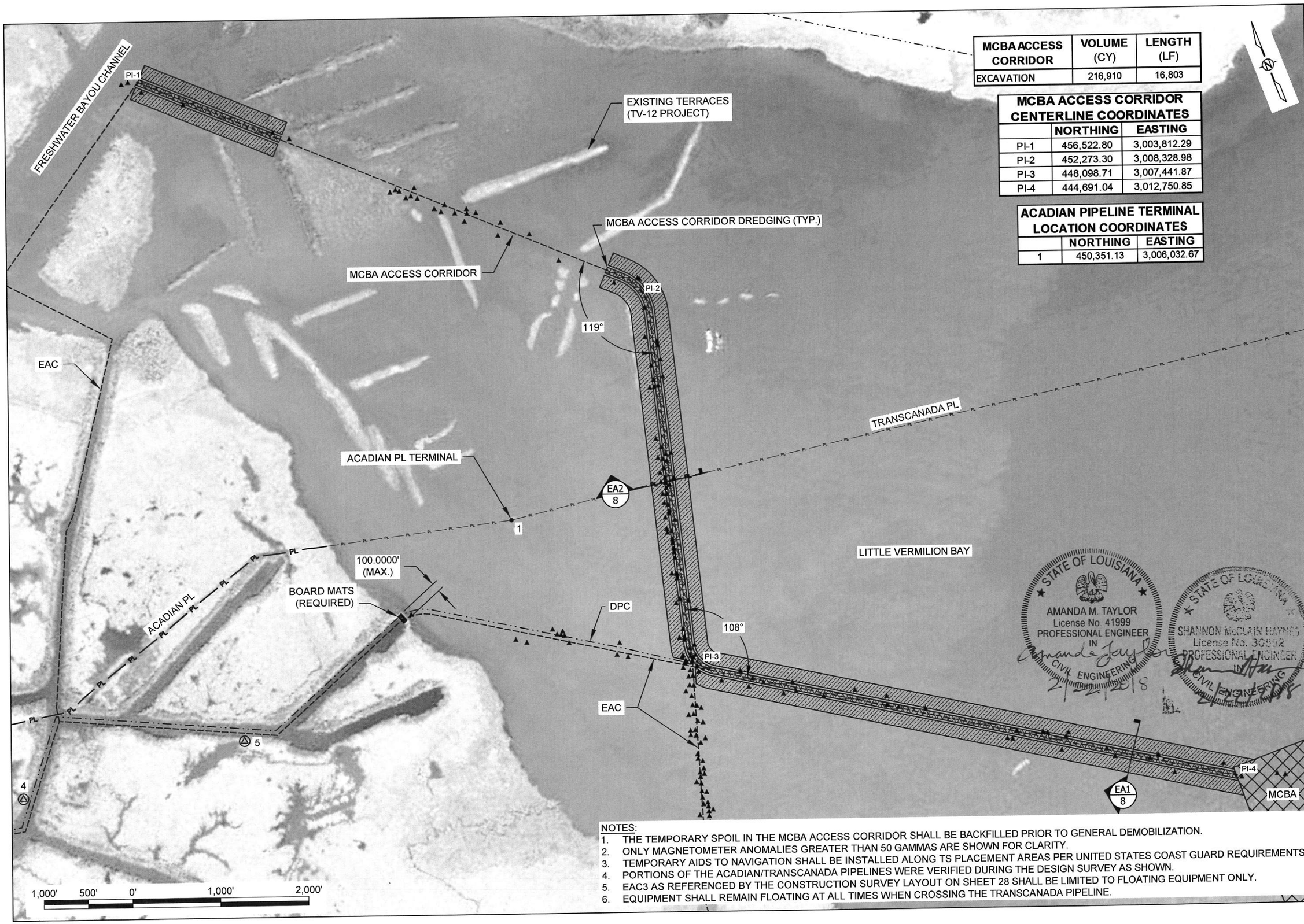

MCBA ACCESS CORRIDOR	VOLUME (CY)	LENGTH (LF)
EXCAVATION	216,910	16,803

MCBA ACCESS CORRIDOR CENTERLINE COORDINATES

	NORTHING	EASTING
PI-1	456,522.80	3,003,812.29
PI-2	452,273.30	3,008,328.98
PI-3	448,098.71	3,007,441.87
PI-4	444,691.04	3,012,750.85

ACADIAN PIPELINE TERMINAL LOCATION COORDINATES

	NORTHING	EASTING
1	450,351.13	3,006,032.67

STATE OF LOUISIANA
AMANDA M. TAYLOR
License No. 41999
PROFESSIONAL ENGINEER
IN
CIVIL ENGINEERING
2/22/2018

STATE OF LOUISIANA
SHANNON McCLAIN HAYNES
License No. 30552
PROFESSIONAL ENGINEER
IN
CIVIL ENGINEERING

NOTES:
1. THE TEMPORARY SPOIL IN THE MCBA ACCESS CORRIDOR SHALL BE BACKFILLED PRIOR TO GENERAL DEMOBILIZATION.
2. ONLY MAGNETOMETER ANOMALIES GREATER THAN 50 GAMMAS ARE SHOWN FOR CLARITY.
3. TEMPORARY AIDS TO NAVIGATION SHALL BE INSTALLED ALONG TS PLACEMENT AREAS PER UNITED STATES COAST GUARD REQUIREMENTS.
4. PORTIONS OF THE ACADIAN/TRANSCANADA PIPELINES WERE VERIFIED DURING THE DESIGN SURVEY AS SHOWN.
5. EAC3 AS REFERENCED BY THE CONSTRUCTION SURVEY LAYOUT ON SHEET 28 SHALL BE LIMITED TO FLOATING EQUIPMENT ONLY.
6. EQUIPMENT SHALL REMAIN FLOATING AT ALL TIMES WHEN CROSSING THE TRANSCANADA PIPELINE.

REV.	DATE	DESCRIPTION	BY

COASTAL PROTECTION AND RESTORATION AUTHORITY
150 TERRACE AVENUE
BATON ROUGE, LOUISIANA 70802

EQUIPMENT ACCESS CORRIDOR LAYOUT

DESIGNED BY: AMANDA TAYLOR, P.E. - 0041999
APPROVED BY: SHANNON HAYNES, P.E. - 0030552

COLE'S BAYOU MARSH CREATION PROJECT

STATE PROJECT NUMBER: TV-63
DRAWN BY: KRISTI CANTU

DATE: FEB. 2018

SHEET 4 OF 50

MCBA LOCATION COORDINATES		
1	444,785.64	3,012,750.85
2	444,785.63	3,016,500.85
3	442,386.50	3,016,500.85
4	442,386.50	3,015,887.10
5	443,014.73	3,012,750.85

ESTIMATED QUANTITIES		
MCBA	VOLUME (CY)	AREA (ACRES)
AVAILABLE	2,729,463	184

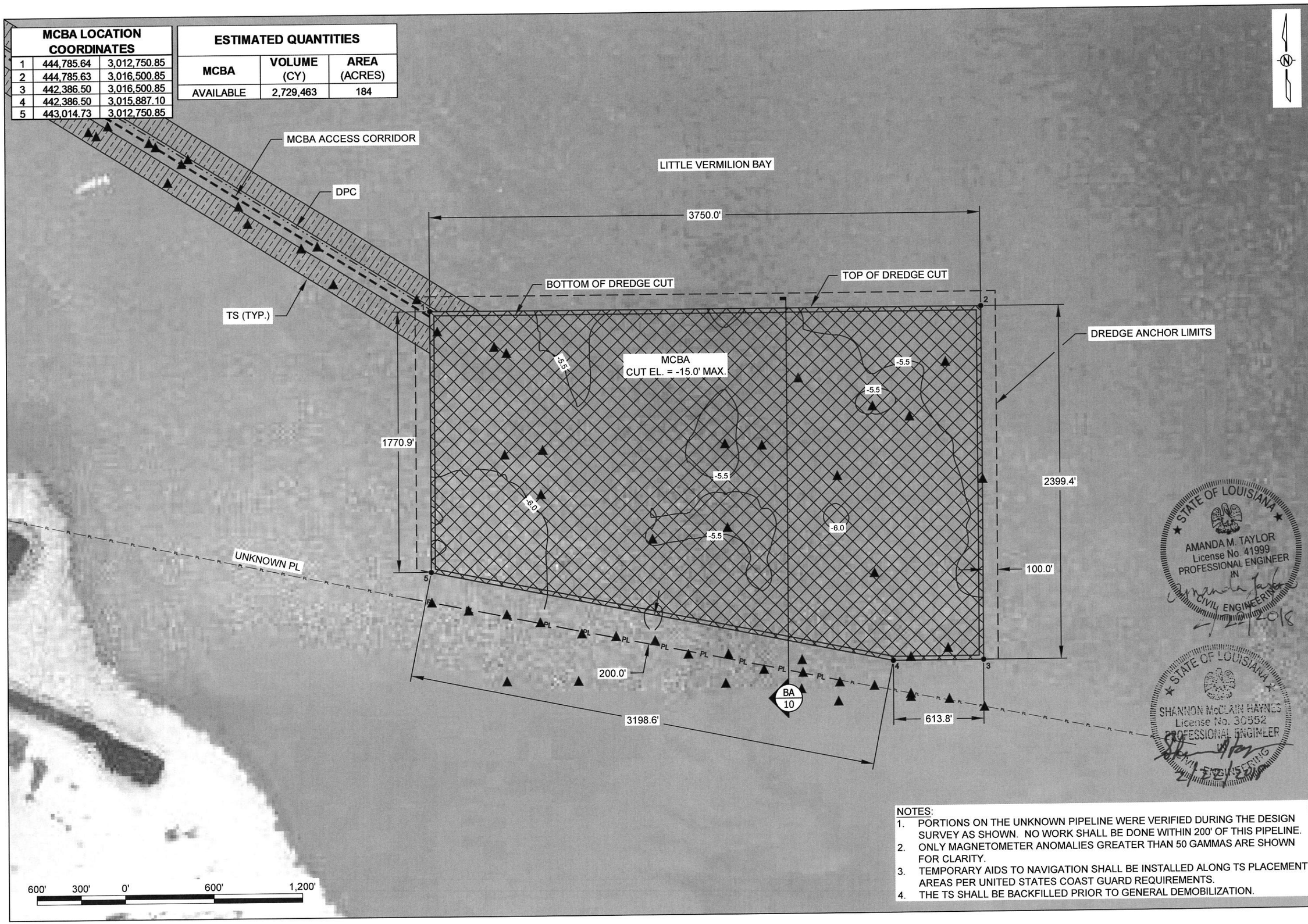

NOTES:

1. PORTIONS ON THE UNKNOWN PIPELINE WERE VERIFIED DURING THE DESIGN SURVEY AS SHOWN. NO WORK SHALL BE DONE WITHIN 200' OF THIS PIPELINE.
2. ONLY MAGNETOMETER ANOMALIES GREATER THAN 50 GAMMAS ARE SHOWN FOR CLARITY.
3. TEMPORARY AIDS TO NAVIGATION SHALL BE INSTALLED ALONG TS PLACEMENT AREAS PER UNITED STATES COAST GUARD REQUIREMENTS.
4. THE TS SHALL BE BACKFILLED PRIOR TO GENERAL DEMOBILIZATION.

STATE OF LOUISIANA
AMANDA M. TAYLOR
License No. 41999
PROFESSIONAL ENGINEER
IN
CIVIL ENGINEERING
2/27/2018

STATE OF LOUISIANA
SHANNON McCLAIN HAYNES
License No. 30552
PROFESSIONAL ENGINEER
IN
CIVIL ENGINEERING
2/27/2018

REV.	DATE	DESCRIPTION	BY

COASTAL PROTECTION AND RESTORATION AUTHORITY
150 TERRACE AVENUE
BATON ROUGE, LOUISIANA 70802

BORROW AREA PLAN VIEW

DESIGNED BY: AMANDA TAYLOR, P.E. - 0041999

APPROVED BY: SHANNON HAYNES, P.E. - 0030552

COLE'S BAYOU MARSH RESTORATION PROJECT

STATE PROJECT NUMBER: TV-63

DRAWN BY: SHANE FAUST

DATE: FEB. 2018

SHEET 5 OF 50

MCA 1
ECD CENTERLINE COORDINATES

	NORTHING	EASTING		NORTHING	EASTING
1	451,591.72	2,998,692.76	12	451,870.69	2,997,562.68
2	451,189.83	2,998,219.25	13	451,839.82	2,997,846.56
3	451,235.72	2,998,037.28	14	451,712.07	2,997,988.24
4	451,167.72	2,998,000.40	15	451,704.12	2,998,030.92
5	451,116.18	2,997,589.16	16	451,824.47	2,998,054.28
6	451,254.78	2,997,541.05	17	451,857.23	2,998,265.58
7	451,208.36	2,997,441.08	18	452,124.64	2,998,315.40
8	451,133.73	2,997,482.52	19	452,432.66	2,998,576.30
9	451,022.62	2,997,316.93	20	452,337.62	2,998,711.94
10	451,139.59	2,996,802.24	21	452,127.79	2,998,645.95
11	451,731.27	2,997,347.46			

MCA 2
ECD CENTERLINE COORDINATES

	NORTHING	EASTING		NORTHING	EASTING		NORTHING	EASTING
1	449,242.98	2,996,167.40	10	447,776.03	2,994,392.47	19	449,425.42	2,994,396.77
2	449,261.50	2,996,000.90	11	447,790.06	2,993,943.81	20	449,562.44	2,994,428.10
3	449,218.34	2,995,953.16	12	447,915.92	2,993,880.33	21	449,745.82	2,994,938.07
4	448,955.50	2,996,068.00	13	448,062.41	2,994,039.58	22	449,941.10	2,995,023.81
5	447,863.52	2,995,992.80	14	448,137.74	2,994,207.91	23	450,194.13	2,995,353.63
6	447,613.15	2,995,772.07	15	448,678.07	2,994,314.73	24	450,300.60	2,996,041.30
7	447,308.00	2,995,382.50	16	448,933.69	2,994,172.55	25	450,179.83	2,996,481.64
8	447,438.33	2,995,191.59	17	449,212.27	2,994,124.48	26	450,101.50	2,996,576.00
9	447,562.00	2,994,577.50	18	449,235.20	2,994,248.39	27	449,987.41	2,996,568.50

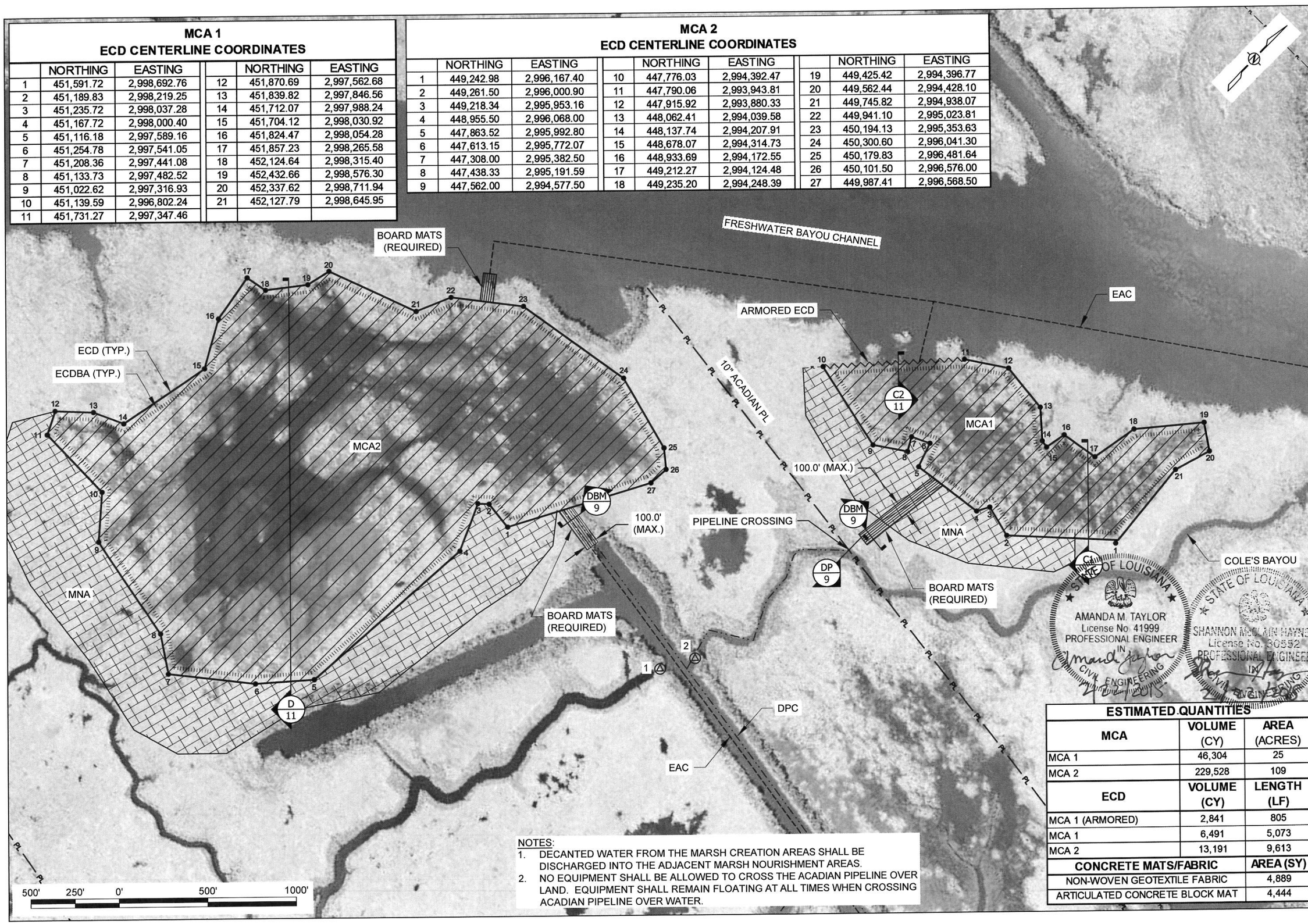

NOTES:
1. DECANTED WATER FROM THE MARSH CREATION AREAS SHALL BE DISCHARGED INTO THE ADJACENT MARSH NOURISHMENT AREAS.
2. NO EQUIPMENT SHALL BE ALLOWED TO CROSS THE ACADIAN PIPELINE OVER LAND. EQUIPMENT SHALL REMAIN FLOATING AT ALL TIMES WHEN CROSSING ACADIAN PIPELINE OVER WATER.

ESTIMATED QUANTITIES

MCA	VOLUME (CY)	AREA (ACRES)
MCA 1	46,304	25
MCA 2	229,528	109
ECD	**VOLUME (CY)**	**LENGTH (LF)**
MCA 1 (ARMORED)	2,841	805
MCA 1	6,491	5,073
MCA 2	13,191	9,613
CONCRETE MATS/FABRIC		**AREA (SY)**
NON-WOVEN GEOTEXTILE FABRIC		4,889
ARTICULATED CONCRETE BLOCK MAT		4,444

REV.	DATE	DESCRIPTION	BY

COASTAL PROTECTION AND RESTORATION AUTHORITY
150 TERRACE AVENUE
BATON ROUGE, LOUISIANA 70802

MARSH CREATION AREAS 1 & 2 PLAN VIEW

DESIGNED BY: AMANDA TAYLOR, P.E. - 0041999
APPROVED BY: SHANNON HAYNES, P.E. - 0030552

COLE'S BAYOU MARSH RESTORATION PROJECT

STATE PROJECT NUMBER: TV-63
DRAWN BY: SHANE FAUST

DATE: FEB. 2018

SHEET 6 OF 50

MCA 3 ECD CENTERLINE COORDINATES

	NORTHING	EASTING		NORTHING	EASTING		NORTHING	EASTING		NORTHING	EASTING		NORTHING	EASTING		NORTHING	EASTING		NORTHING	EASTING
1	444,088.23	2,999,478.45	10	442,909.01	3,000,403.58	19	443,290.79	2,997,634.51	28	441,802.15	2,993,158.75	37	444,360.82	2,993,626.12	46	444,140.06	2,997,430.48	55	445,100.26	2,998,617.39
2	443,935.31	3,000,065.93	11	442,609.96	3,000,366.22	20	443,119.85	2,997,669.17	29	441,818.65	2,993,858.33	38	444,108.52	2,994,283.95	47	444,514.88	2,997,464.76	56	445,013.15	2,998,650.51
3	444,036.16	3,000,525.55	12	442,619.45	3,000,165.31	21	442,459.25	2,997,495.81	30	442,207.88	2,994,006.29	39	444,142.41	2,994,641.65	48	444,588.74	2,997,693.23	57	444,893.02	2,998,541.63
4	444,258.20	3,000,715.32	13	442,770.08	3,000,100.73	22	442,480.72	2,996,572.95	31	442,646.99	2,994,314.03	40	444,084.67	2,994,856.03	49	444,782.64	2,997,825.66	58	444,653.48	2,998,522.35
5	444,230.53	3,001,114.43	14	442,786.13	2,999,768.44	23	441,944.12	2,996,065.86	32	443,164.67	2,993,819.71	41	443,998.34	2,994,850.07	50	445,011.70	2,997,704.19	59	444,634.58	2,998,840.86
6	443,626.21	3,001,215.63	15	442,871.55	2,999,671.01	24	441,906.89	2,994,749.59	33	443,397.23	2,993,823.87	42	443,901.44	2,994,799.15	51	445,071.34	2,997,763.97	60	444,328.98	2,999,346.17
7	443,445.50	3,001,295.47	16	443,224.68	2,999,753.51	25	441,510.25	2,993,962.59	34	443,666.27	2,993,948.75	43	443,714.68	2,994,874.43	52	445,029.58	2,998,208.99	61	444,250.91	2,999,328.92
8	443,113.40	3,001,134.26	17	443,386.43	2,998,956.34	26	441,302.03	2,993,667.84	35	443,744.22	2,993,686.39	44	443,149.33	2,995,702.14	53	445,053.19	2,998,358.74			
9	442,857.15	3,000,565.24	18	443,399.96	2,997,782.78	27	441,359.68	2,993,120.27	36	444,322.98	2,993,555.46	45	443,549.24	2,996,399.79	54	445,156.70	2,998,439.45			

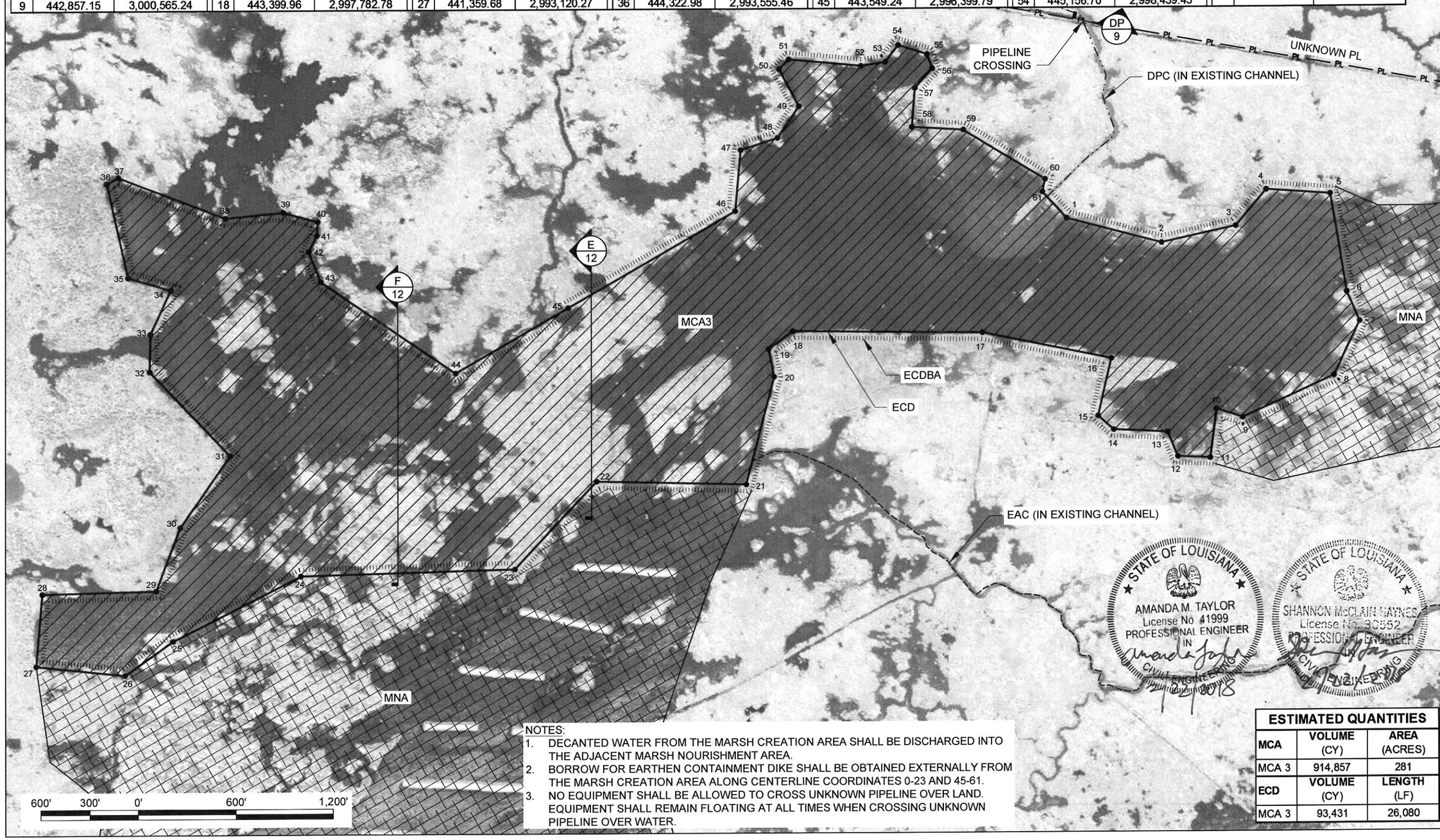

NOTES:
1. DECANTED WATER FROM THE MARSH CREATION AREA SHALL BE DISCHARGED INTO THE ADJACENT MARSH NOURISHMENT AREA.
2. BORROW FOR EARTHEN CONTAINMENT DIKE SHALL BE OBTAINED EXTERNALLY FROM THE MARSH CREATION AREA ALONG CENTERLINE COORDINATES 0-23 AND 45-61.
3. NO EQUIPMENT SHALL BE ALLOWED TO CROSS UNKNOWN PIPELINE OVER LAND. EQUIPMENT SHALL REMAIN FLOATING AT ALL TIMES WHEN CROSSING UNKNOWN PIPELINE OVER WATER.

STATE OF LOUISIANA
AMANDA M. TAYLOR
License No 41999
PROFESSIONAL ENGINEER
IN
CIVIL ENGINEERING

STATE OF LOUISIANA
SHANNON McCLAIN HAYNES
License No. 30552
PROFESSIONAL ENGINEER
IN
CIVIL ENGINEERING

ESTIMATED QUANTITIES		
MCA	VOLUME (CY)	AREA (ACRES)
MCA 3	914,857	281
ECD	VOLUME (CY)	LENGTH (LF)
MCA 3	93,431	26,080

REV.	DATE	DESCRIPTION	BY

COASTAL PROTECTION AND RESTORATION AUTHORITY
150 TERRACE AVENUE
BATON ROUGE, LOUISIANA 70802

MARSH CREATION AREA 3 PLAN VIEW

DESIGNED BY: AMANDA TAYLOR, P.E. - 0041999
APPROVED BY: SHANNON HAYNES, P.E. - 0030552

COLE'S BAYOU MARSH RESTORATION PROJECT

STATE PROJECT NUMBER: TV-63
DRAWN BY: SHANE FAUST

DATE: FEB. 2018

SHEET 7 OF 50

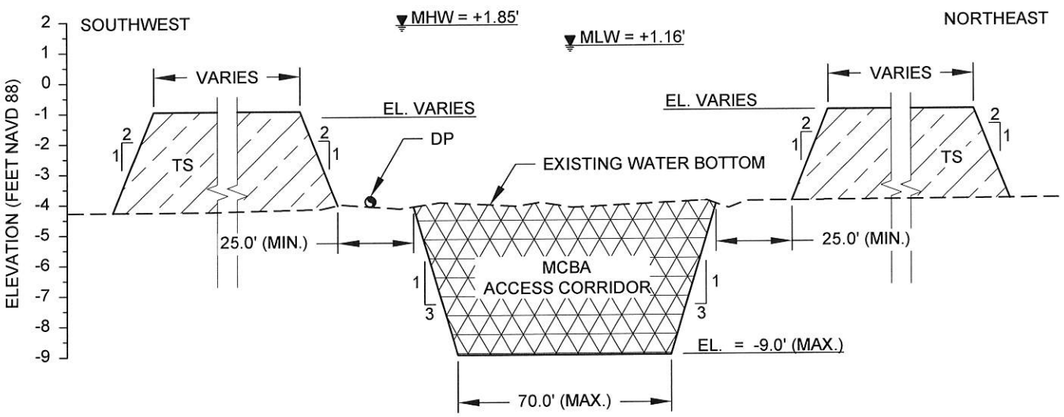

EA1 / 4 **MCBA ACCESS CORRIDOR TYPICAL SECTION**

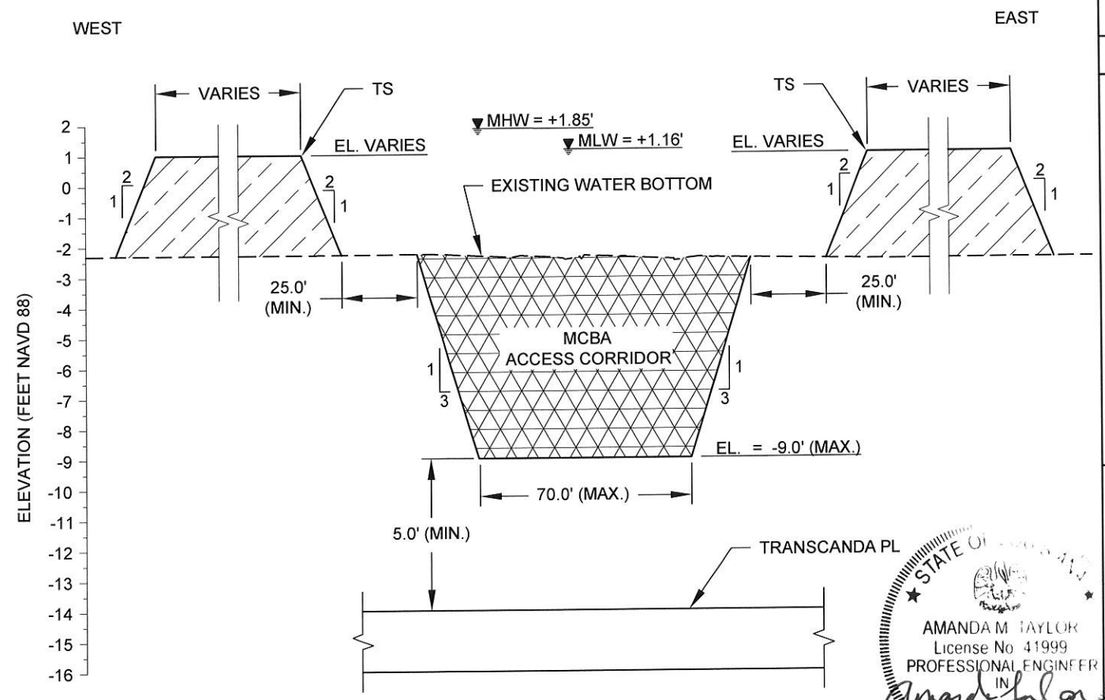

EA2 / 4 **MCBA ACCESS CORRIDOR ACROSS TRANSCANADA PIPELINE TYPICAL SECTION**

STATE OF LOUISIANA
AMANDA M. TAYLOR
License No. 41999
PROFESSIONAL ENGINEER
IN
CIVIL ENGINEERING
2/22/2018

STATE OF LOUISIANA
SHANNON McCLAIN HAYNES
License No. 30552
PROFESSIONAL ENGINEER
IN
CIVIL ENGINEERING
2/22/2018

NOTES:

1. THE CONTRACTOR IS NOT REQUIRED TO EXCAVATE MCBA ACCESS CORRIDOR TO THE FULL WIDTH OR DEPTH SHOWN.
2. PIPELINE INFORMATION SHOWN ON PLANS IS APPROXIMATE. THE CONTRACTOR SHALL VERIFY EXACT LOCATIONS PRIOR TO BEGINNING CONSTRUCTION.
3. TEMPORARY AIDS TO NAVIGATION SHALL BE INSTALLED ALONG TS PLACEMENT AREAS PER UNITED STATES COAST GUARD REQUIREMENTS.
4. TS SHALL BE BACKFILLED PRIOR TO GENERAL DEMOBILIZATION.

HORIZONTAL GRAPHIC SCALE
50' 25' 0 50' 100'
5' 2.5' 0 5' 10'
VERTICAL GRAPHIC SCALE

REV.	DATE	DESCRIPTION	BY

COASTAL PROTECTION AND RESTORATION AUTHORITY
150 TERRACE AVENUE
BATON ROUGE, LOUISIANA 70802

EQUIPEMENT ACCESS TYPICAL SECTIONS

DESIGNED BY: AMANDA TAYLOR, P.E. - 0041999
APPROVED BY: SHANNON HAYNES, P.E. - 0030552

COLE'S BAYOU MARSH CREATION PROJECT

STATE PROJECT NUMBER: TV-63
DRAWN BY: SHANE FAUST

DATE: FEB. 2018

SHEET 8 OF 50

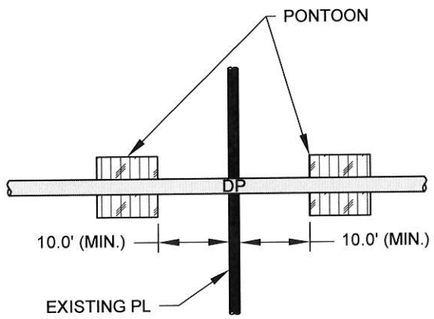

PLAN VIEW

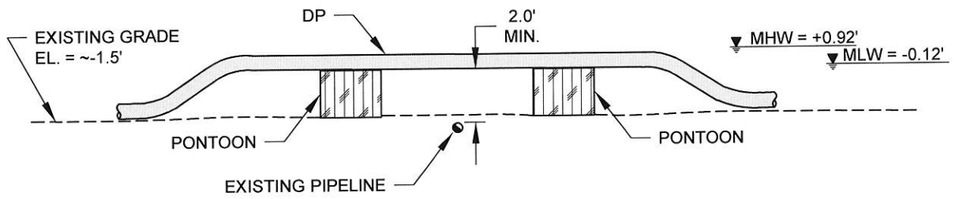

SECTION VIEW

DP 3, 6, 7 **DP CROSSING AT UNKNOWN AND ACADIAN PL**
NTS

NOTE:
PIPELINE INFORMATION SHOWN ON PLANS IS APPROXIMATE.
THE CONTRACTOR SHALL VERIFY EXACT LOCATIONS PRIOR TO BEGINNING CONSTRUCTION.

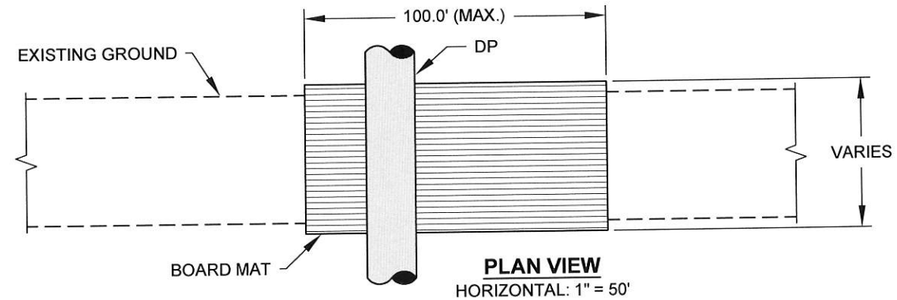

PLAN VIEW
HORIZONTAL: 1" = 50'
VERTICAL: 1" = 50'

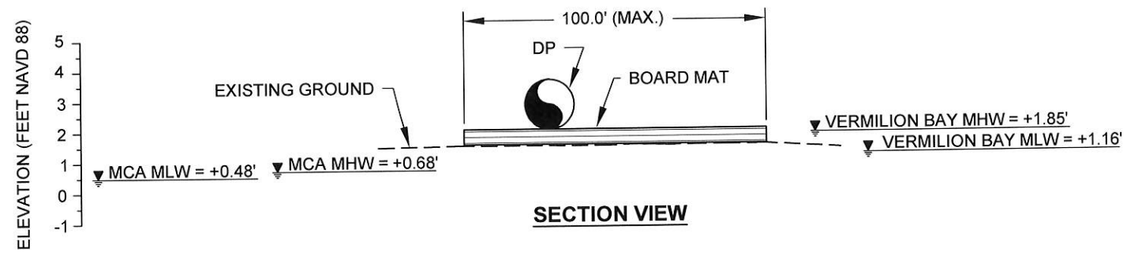

SECTION VIEW

DBM 3, 6 **DP BOARD MAT CROSSING TYPICAL SECTION**

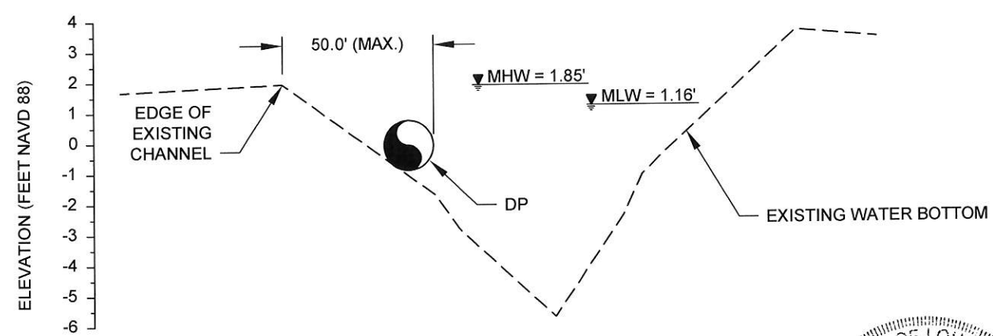

DEA 3 **DPC AND EAC TYPICAL SECTION**

STATE OF LOUISIANA
AMANDA M. TAYLOR
License No 41999
PROFESSIONAL ENGINEER
IN
CIVIL ENGINEERING
2/12/2018

HORIZONTAL GRAPHIC SCALE
50' 25' 0 50' 100'
5' 2.5' 0 5' 10'
VERTICAL GRAPHIC SCALE

STATE OF LOUISIANA
SHANNON McCLAIN HAYNES
License No. 30552
PROFESSIONAL ENGINEER
IN
CIVIL ENGINEERING
2/12/2018

REV.	DATE	DESCRIPTION	BY

COASTAL PROTECTION AND RESTORATION AUTHORITY
150 TERRACE AVENUE
BATON ROUGE, LOUISIANA 70802

DREDGE PIPELINE CORRIDOR & CROSSINGS TYPICAL SECTIONS

DESIGNED BY: AMANDA TAYLOR, P.E. - 0041999
APPROVED BY: SHANNON HAYNES, P.E. - 0030552

COLE'S BAYOU
MARSH CREATION PROJECT

STATE PROJECT NUMBER: TV-63
DRAWN BY: SHANE FAUST

DATE: FEB. 2018

SHEET 9 OF 50

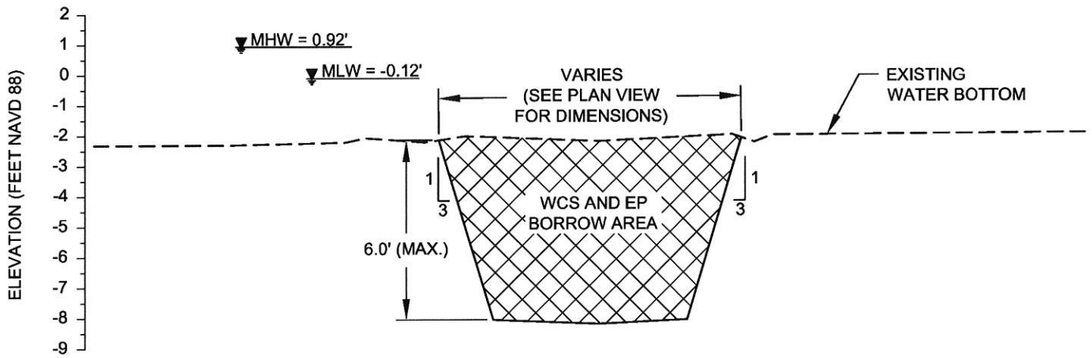

SBA 15-18, 20-21 **WCS AND EP BORROW AREA TYPICAL SECTION**

HORIZONTAL GRAPHIC SCALE
50' 25' 0 50' 100'
5' 2.5' 0 5' 10'
VERTICAL GRAPHIC SCALE

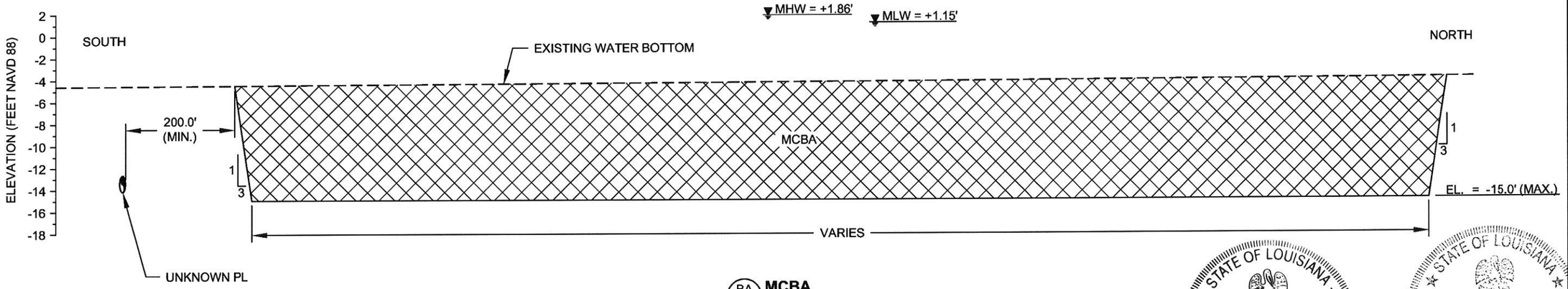

BA 5 **MCBA TYPICAL SECTION**

HORIZONTAL GRAPHIC SCALE
200' 100' 0 200' 400'
10' 5' 0 10' 20'
VERTICAL GRAPHIC SCALE

STATE OF LOUISIANA
AMANDA M. TAYLOR
License No 41999
PROFESSIONAL ENGINEER
IN
CIVIL ENGINEERING

STATE OF LOUISIANA
SHANNON McCLAIN HAYNES
License No. 30552
PROFESSIONAL ENGINEER
IN
CIVIL ENGINEERING

NOTE:
PIPELINE INFORMATION SHOWN ON PLANS IS APPROXIMATE. THE CONTRACTOR SHALL VERIFY EXACT LOCATIONS PRIOR TO BEGINNING CONSTRUCTION.

REV.	DATE	DESCRIPTION	BY

COASTAL PROTECTION AND RESTORATION AUTHORITY
150 TERRACE AVENUE
BATON ROUGE, LOUISIANA 70802

DREDGE PIPELINE CROSSING & BORROW AREA TYPICAL SECTIONS

DESIGNED BY: AMANDA TAYLOR, P.E. - 0041999
APPROVED BY: SHANNON HAYNES, P.E. - 0030552

COLE'S BAYOU MARSH CREATION PROJECT

STATE PROJECT NUMBER: TV-63
DRAWN BY: SHANE FAUST

DATE: FEB. 2018

SHEET 10 OF 50

ECD AND BORROW AREA GEOMETRIES

ECD	MARSH CREATION AREA	DIKE			BORROW			
		CREST WIDTH (FT)	CREST HEIGHT (FT)	SIDE SLOPES (RISE:RUN)	DIKE OFFSET (FT)	TROUGH WIDTH (FT)	TROUGH DEPTH (EL)	SIDE SLOPES
MCA1 ARMORED	1	5	4.0 (MAX)	1:4	25 (MIN)	VARIES	-5 (MAX)	1:2
MCA1	1	5	4.0 (MAX)	1:4	25 (MIN)	VARIES	-5 (MAX)	1:2
MCA2	2	5	4.0 (MAX)	1:4	25 (MIN)	VARIES	-5 (MAX)	1:2

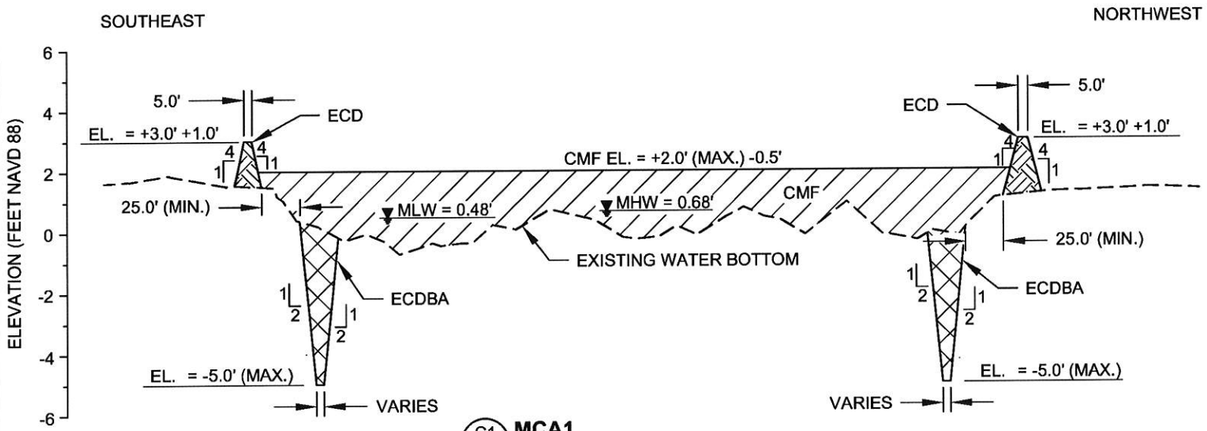

C1/6 **MCA1 TYPICAL SECTION**

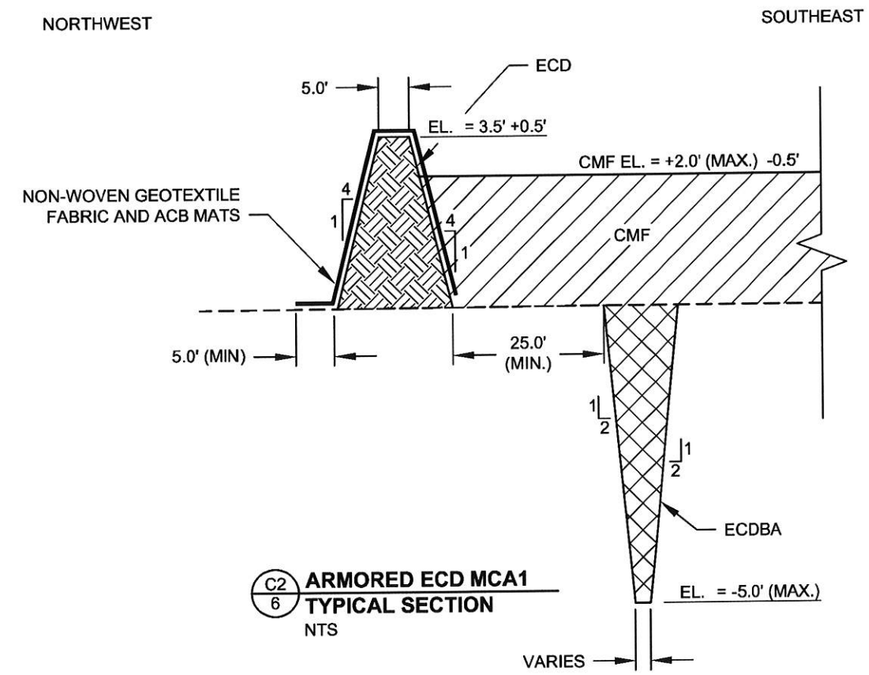

C2/6 **ARMORED ECD MCA1 TYPICAL SECTION**
NTS

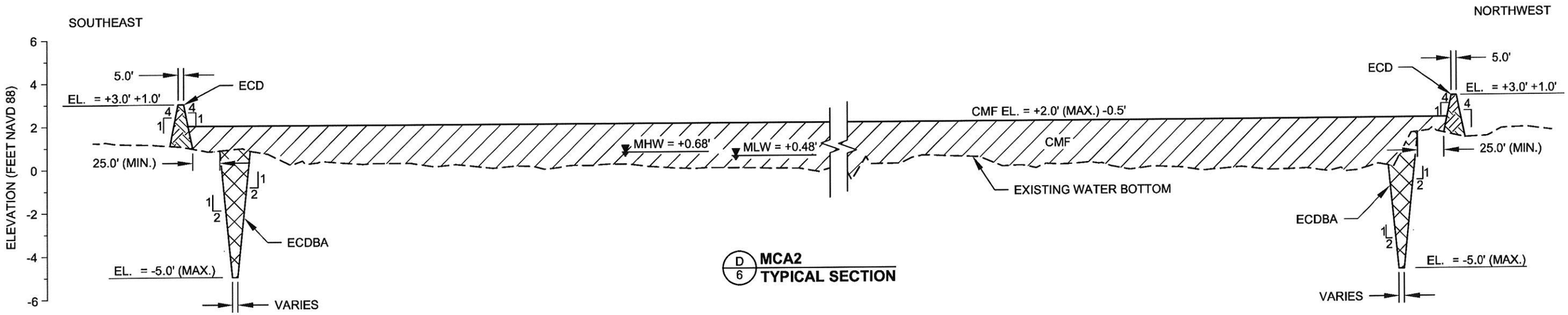

D/6 **MCA2 TYPICAL SECTION**

HORIZONTAL GRAPHIC SCALE
100' 50' 0 100' 200'
5' 2.5' 0 5' 10'
VERTICAL GRAPHIC SCALE

STATE OF LOUISIANA
AMANDA M. TAYLOR
License No 41999
PROFESSIONAL ENGINEER
IN
CIVIL ENGINEERING
2/19/2018

STATE OF LOUISIANA
SHANNON McCLAIN HAYNES
License No. 30552
PROFESSIONAL ENGINEER
IN
CIVIL ENGINEERING
2/19/2018

REV.	DATE	DESCRIPTION	BY

COASTAL PROTECTION AND RESTORATION AUTHORITY
150 TERRACE AVENUE
BATON ROUGE, LOUISIANA 70802

MARSH CREATION AREA TYPICAL SECTIONS

DESIGNED BY: AMANDA TAYLOR, P.E. - 0041999
APPROVED BY: SHANNON HAYNE, P.E. - 0030552

COLE'S BAYOU MARSH RESTORATION PROJECT

STATE PROJECT NUMBER: TV-63
DRAWN BY: SHANE FAUST

DATE: FEB. 2018

SHEET 11 OF 50

ECD AND BORROW AREA GEOMETRIES

ECD	MARSH CREATION AREA	DIKE			BORROW			
		CREST WIDTH (FT)	CREST HEIGHT (FT)	SIDE SLOPES (RISE:RUN)	DIKE OFFSET (FT)	TROUGH WIDTH (FT)	TROUGH DEPTH (EL)	SIDE SLOPES
MCA 3 (EXTERIOR DIKE BORROW)	3	5	4.5 (MAX)	1:4	25 (MIN)	VARIES	VARIES	1:4
MCA 3 (INTERIOR DIKE BORROW)	3	5	4.5 (MAX)	1:4	25 (MIN)	VARIES	-5 (MAX)	1:2

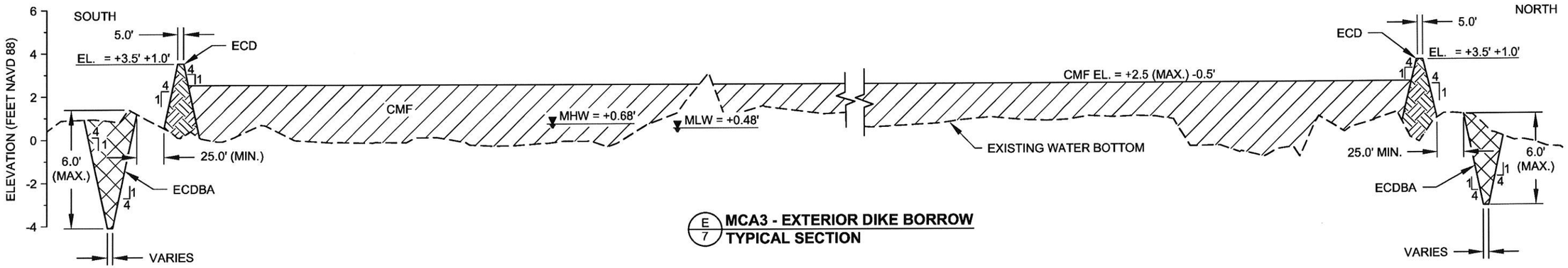

E/7 **MCA3 - EXTERIOR DIKE BORROW TYPICAL SECTION**

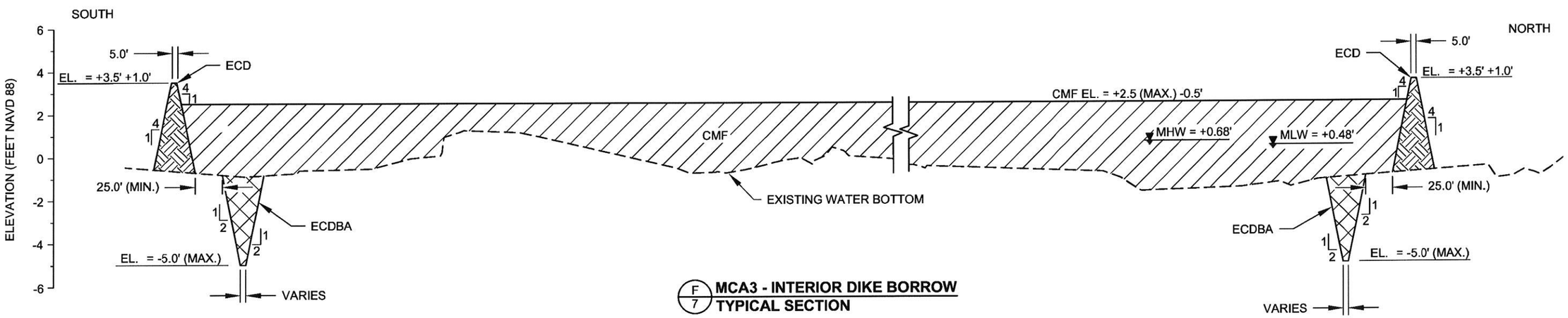

F/7 **MCA3 - INTERIOR DIKE BORROW TYPICAL SECTION**

HORIZONTAL GRAPHIC SCALE
100' 50' 0 100' 200'
5' 2.5' 0 5' 10'
VERTICAL GRAPHIC SCALE

STATE OF LOUISIANA
AMANDA M TAYLOR
License No 41999
PROFESSIONAL ENGINEER
IN
CIVIL ENGINEERING
2/22/2018

STATE OF LOUISIANA
SHANNON McCLAIN HAYNES
License No. 30552
PROFESSIONAL ENGINEER
IN
CIVIL ENGINEERING
2/22/2018

REV.	DATE	DESCRIPTION	BY

COASTAL PROTECTION AND RESTORATION AUTHORITY
150 TERRACE AVENUE
BATON ROUGE, LOUISIANA 70802

MARSH CREATION AREA TYPICAL SECTIONS

DESIGNED BY: AMANDA TAYLOR, P.E. - 0041999
APPROVED BY: SHANNON HAYNE, P.E. - 0030552

COLE'S BAYOU MARSH RESTORATION PROJECT

STATE PROJECT NUMBER: TV-63
DRAWN BY: SHANE FAUST

DATE: FEB. 2018

SHEET 12 OF 50

WCS 1				
	INTAKE		OUTFALL	
CMP	NORTHING	EASTING	NORTHING	EASTING
A	449,294.79	2,997,347.49	449,242.25	2,997,318.52
B	449,290.68	2,997,354.93	449,238.14	2,997,325.96
C	449,286.58	2,997,362.37	449,234.04	2,997,333.40

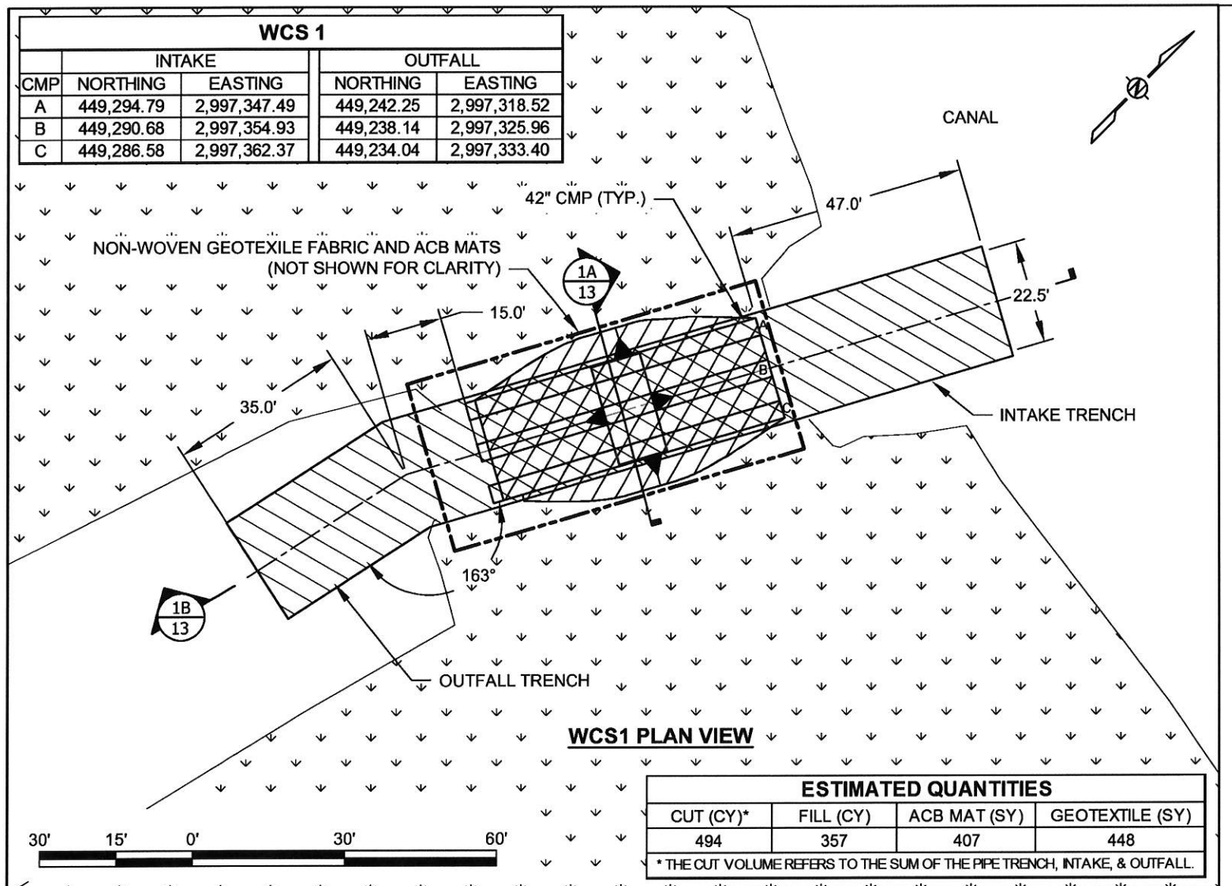

WCS1 PLAN VIEW

ESTIMATED QUANTITIES			
CUT (CY)*	FILL (CY)	ACB MAT (SY)	GEOTEXTILE (SY)
494	357	407	448

* THE CUT VOLUME REFERS TO THE SUM OF THE PIPE TRENCH, INTAKE, & OUTFALL.

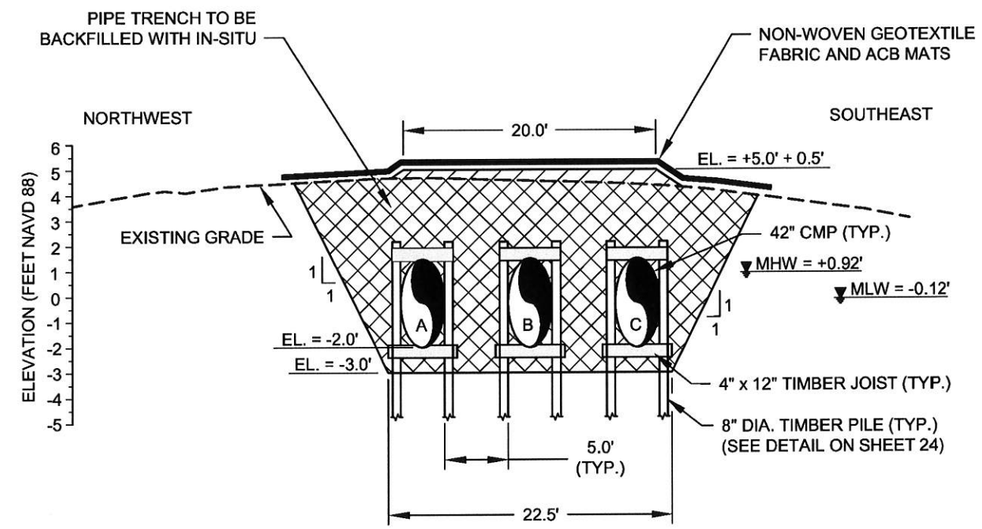

1A/13 WCS1 SECTION

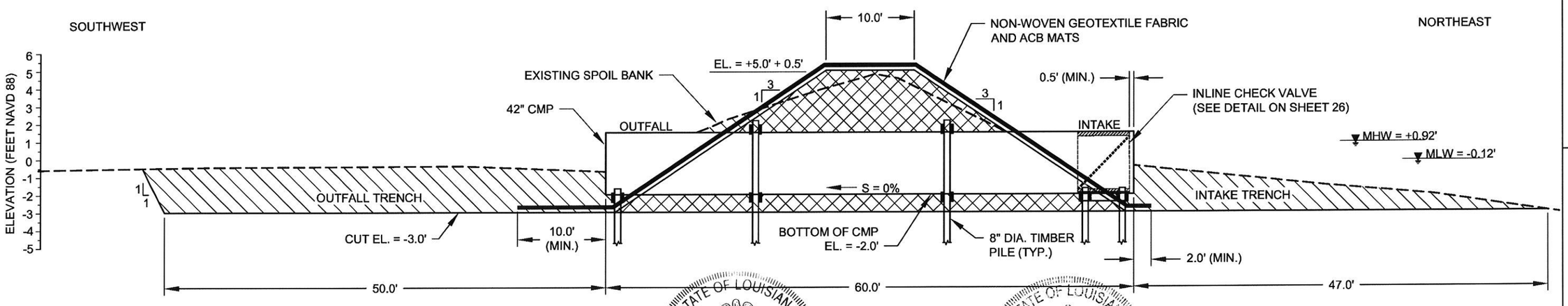

1B/13 WCS1 PROFILE

NOTES:
1. THE INLINE CHECK VALVE SHALL BE PLACED INSIDE THE CMP A MINIMUM OF 6" FROM THE EDGE OF PIPE.
2. INTAKE AND OUTFALL COORDINATES DENOTE CENTERLINE OF PIPE.
3. ACB MAT DIMENSIONS SHALL BE 8' X 20'.
4. ACB MATS TO BE FIT/CUT AT EACH CMP INTAKE/OUTFALL.
5. SEE SHEET 24 FOR TIMBER PILE AND TIMBER JOIST DETAILS.

STATE OF LOUISIANA
AMANDA M. TAYLOR
License No. 41999
PROFESSIONAL ENGINEER
IN CIVIL ENGINEERING
2/9/2018

STATE OF LOUISIANA
SHANNON McCLAIN HAYNES
License No. 30552
PROFESSIONAL ENGINEER
IN CIVIL ENGINEERING
2/9/2018

HORIZONTAL GRAPHIC SCALE
12' 6' 0 12' 24'
6' 3' 0 6' 12'
VERTICAL GRAPHIC SCALE

REV.	DATE	DESCRIPTION	BY

COASTAL PROTECTION AND RESTORATION AUTHORITY
150 TERRACE AVENUE
BATON ROUGE, LOUISIANA 70802

WATER STRUCTURE 1
PLAN, PROFILE & SECTION

DESIGNED BY: AMANDA TAYLOR, P.E. - 0041999
APPROVED BY: SHANNON HAYNES, P.E. - 0030552

COLE'S BAYOU
MARSH RESTORATION PROJECT

STATE PROJECT NUMBER: TV-63
DRAWN BY: SHANE FAUST

DATE: FEB. 2018

SHEET 13 OF 50

WCS 2				
	INTAKE		OUTFALL	
	NORTHING	EASTING	NORTHING	EASTING
A	449,498.18	2,997,433.20	449,498.18	2,997,441.70
B	449,438.18	2,997,433.20	449,438.18	2,997,441.70

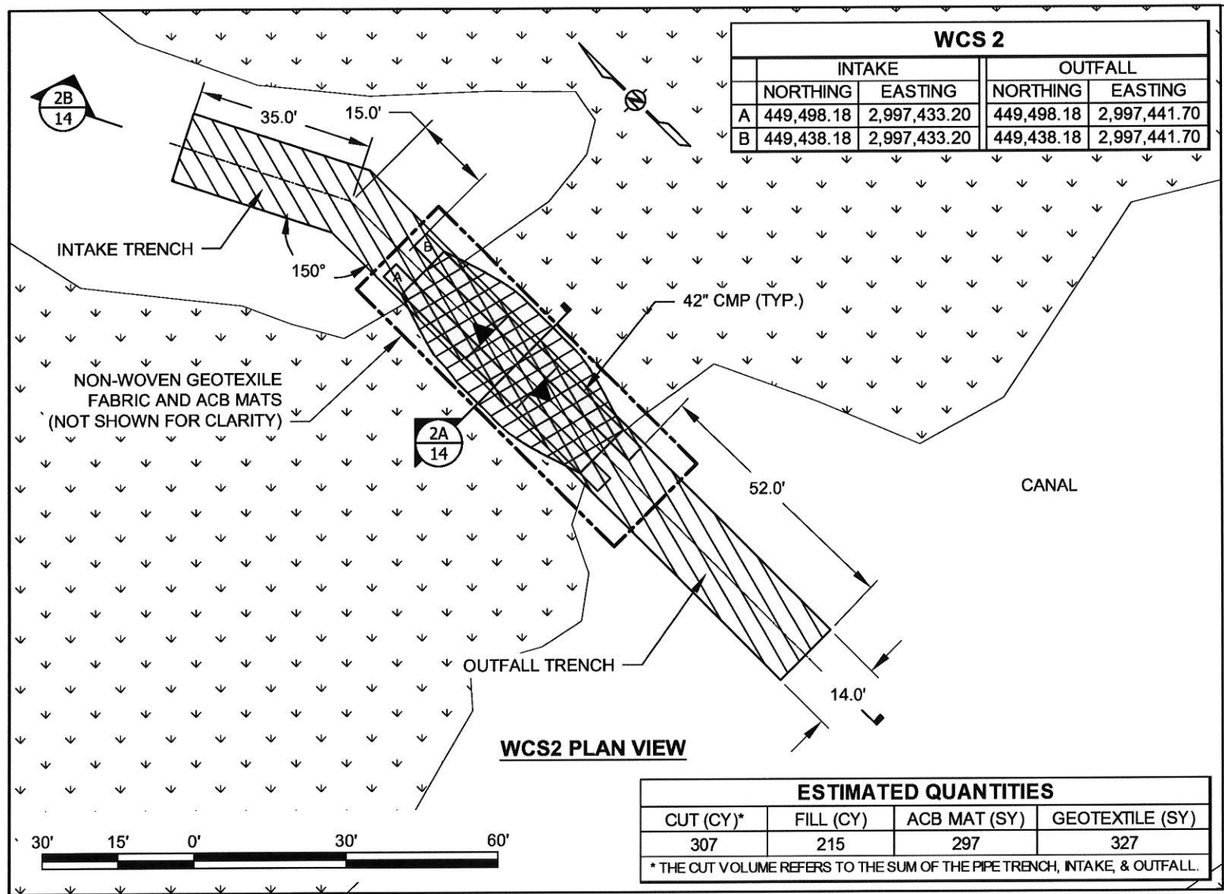

WCS2 PLAN VIEW

ESTIMATED QUANTITIES			
CUT (CY)*	FILL (CY)	ACB MAT (SY)	GEOTEXTILE (SY)
307	215	297	327
* THE CUT VOLUME REFERS TO THE SUM OF THE PIPE TRENCH, INTAKE, & OUTFALL.			

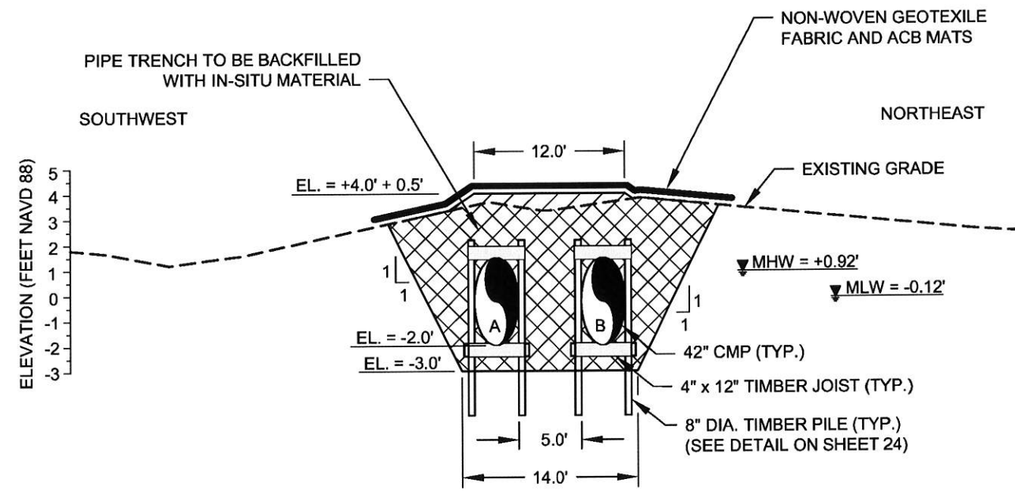

2A 14 WCS2 SECTION

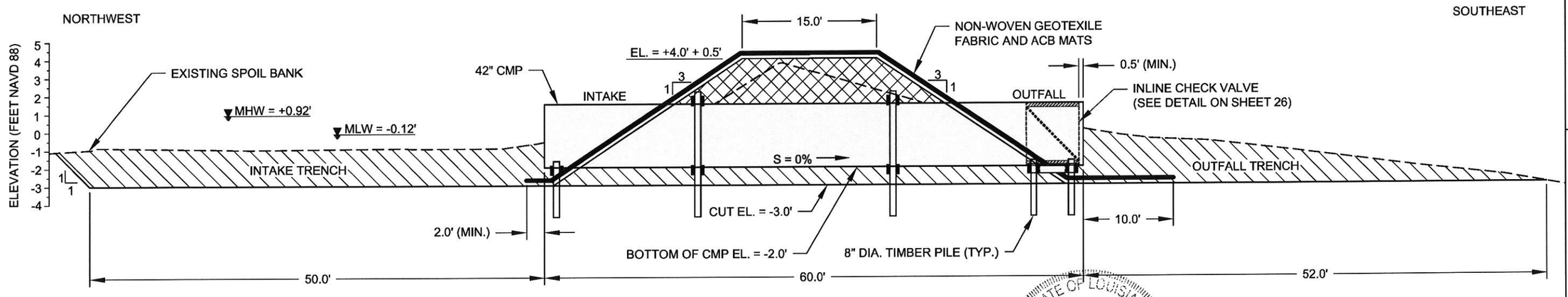

2B 14 WCS2 PROFILE

NOTES:
1. THE INLINE CHECK VALVE SHALL BE PLACED INSIDE THE CMP A MINIMUM OF 6" FROM THE EDGE OF PIPE.
2. INTAKE AND OUTFALL COORDINATES DENOTE CENTERLINE OF PIPE.
3. ACB MAT DIMENSIONS SHALL BE 8' X 20'.
4. ACB MATS TO BE FIT/CUT AT EACH CMP INTAKE/OUTFALL.
5. SEE SHEET 24 FOR TIMBER PILE AND TIMBER JOIST DETAILS.

STATE OF LOUISIANA
AMANDA M. TAYLOR
License No. 41999
PROFESSIONAL ENGINEER
IN
CIVIL ENGINEERING

STATE OF LOUISIANA
SHANNON McCLAIN HAYNES
License No. 30552
PROFESSIONAL ENGINEER
IN
CIVIL ENGINEERING

HORIZONTAL GRAPHIC SCALE
12' 6' 0 12' 24'
6' 3' 0 6' 12'
VERTICAL GRAPHIC SCALE

REV.	DATE	DESCRIPTION	BY

COASTAL PROTECTION AND RESTORATION AUTHORITY
150 TERRACE AVENUE
BATON ROUGE, LOUISIANA 70802

WATER STRUCTURE 2
PLAN, PROFILE & SECTION

DESIGNED BY: AMANDA TAYLOR, P.E. - 0041999
APPROVED BY: SHANNON HAYNES, P.E. - 0030552

COLE'S BAYOU
MARSH RESTORATION PROJECT

STATE PROJECT NUMBER: TV-63
DRAWN BY: SHANE FAUST

DATE: FEB. 2018

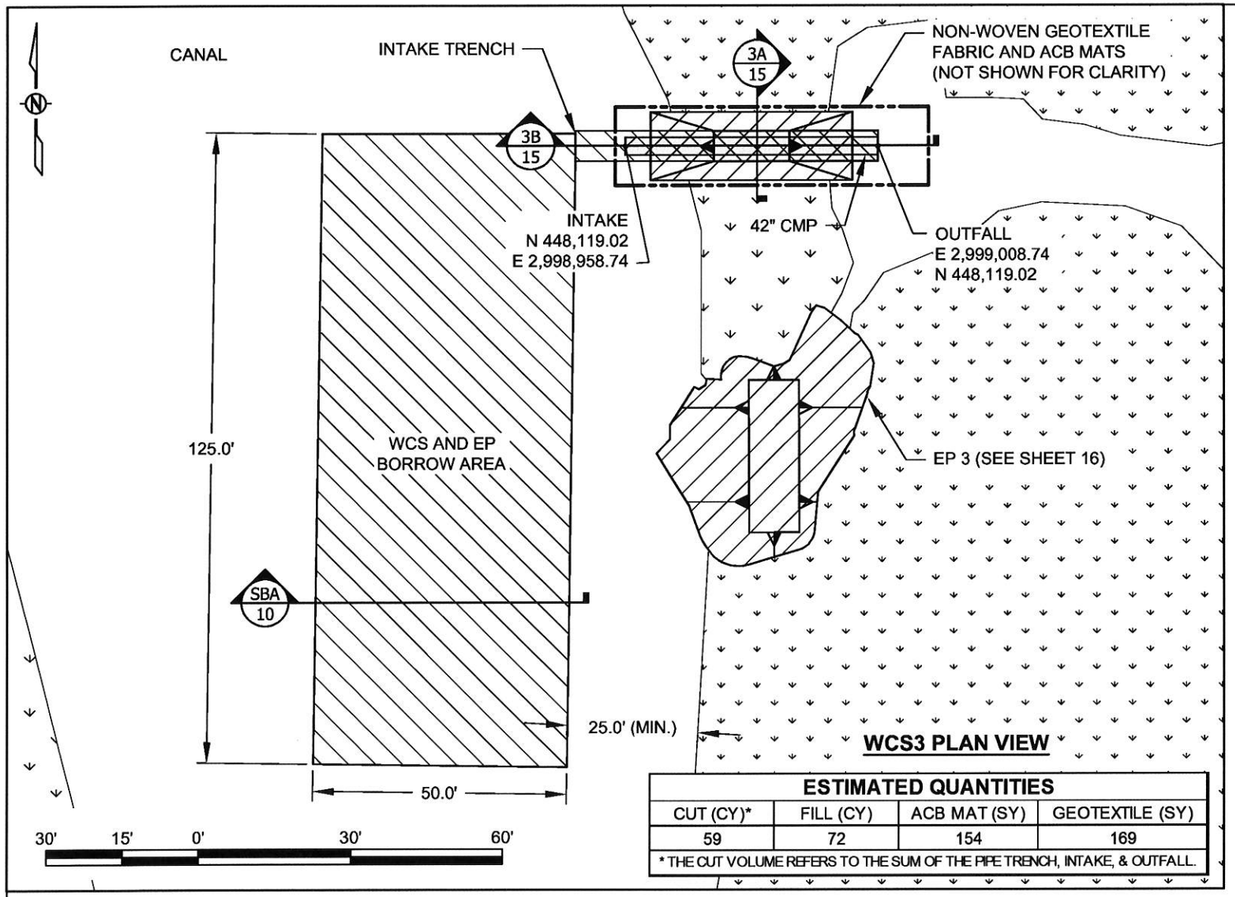

WCS3 PLAN VIEW

ESTIMATED QUANTITIES			
CUT (CY)*	FILL (CY)	ACB MAT (SY)	GEOTEXTILE (SY)
59	72	154	169

* THE CUT VOLUME REFERS TO THE SUM OF THE PIPE TRENCH, INTAKE, & OUTFALL.

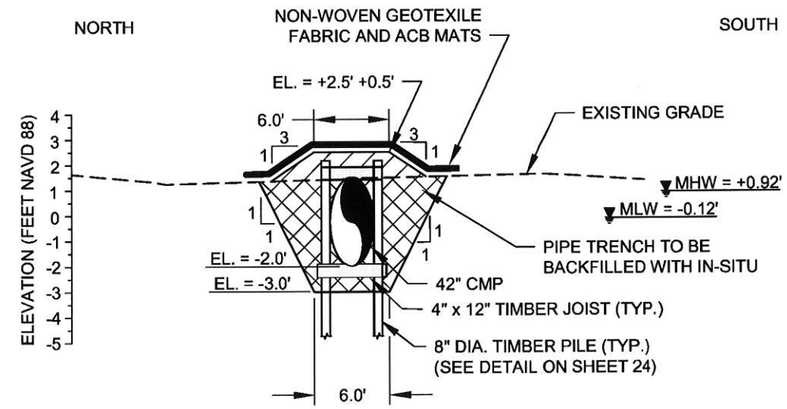

3A 15 **WCS3 SECTION**

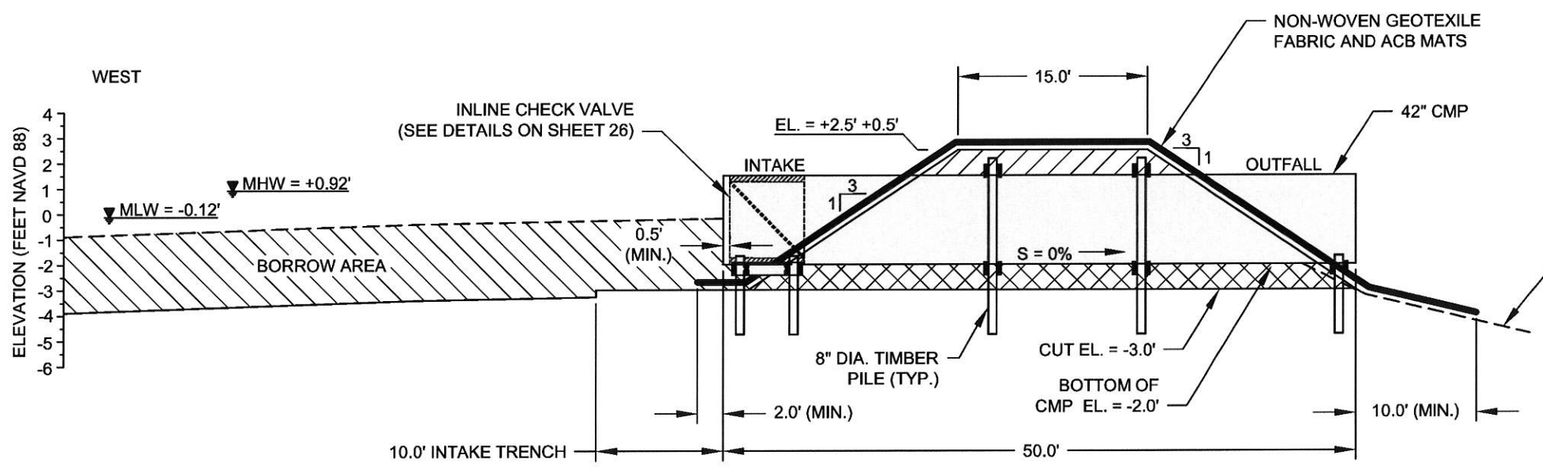

3B 15 **WCS3 PROFILE**

HORIZONTAL GRAPHIC SCALE
12' 6' 0 12' 24'
6' 3' 0 6' 12'
VERTICAL GRAPHIC SCALE

NOTES:
1. THE INLINE CHECK VALVE SHALL BE PLACED INSIDE THE CMP A MINIMUM OF 6" FROM THE EDGE OF PIPE.
2. INTAKE AND OUTFALL COORDINATES DENOTE CENTERLINE OF PIPE.
3. ACB MAT DIMENSIONS SHALL BE 8' X 20'.
4. ACB MATS TO BE FIT/CUT AT EACH CMP INTAKE/OUTFALL.
5. SEE SHEET 24 FOR TIMBER PILE AND TIMBER JOIST DETAILS.

STATE OF LOUISIANA
AMANDA M. TAYLOR
License No 41999
PROFESSIONAL ENGINEER
IN
CIVIL ENGINEERING
2/22/2018

STATE OF LOUISIANA
SHANNON McCLAIN HAYNES
License No. 30552
PROFESSIONAL ENGINEER
CIVIL ENGINEERING

REV.	DATE	DESCRIPTION	BY

COASTAL PROTECTION AND RESTORATION AUTHORITY
150 TERRACE AVENUE
BATON ROUGE, LOUISIANA 70802

WATER STRUCTURE 3
PLAN, PROFILE & SECTION

DESIGNED BY: AMANDA TAYLOR, P.E. - 0041999
APPROVED BY: SHANNON HAYNES, P.E. - 0030552

COLE'S BAYOU
MARSH RESTORATION PROJECT

STATE PROJECT NUMBER: TV-63
DRAWN BY: SHANE FAUST

DATE: FEB. 2018

SHEET 15 OF 50

ESTIMATED QUANTITIES	
CUT (CY)*	FILL (CY)
0	164

* THE CUT VOLUME REFERS TO THE SUM OF THE PIPE TRENCH, INTAKE, AND OUTFALL.

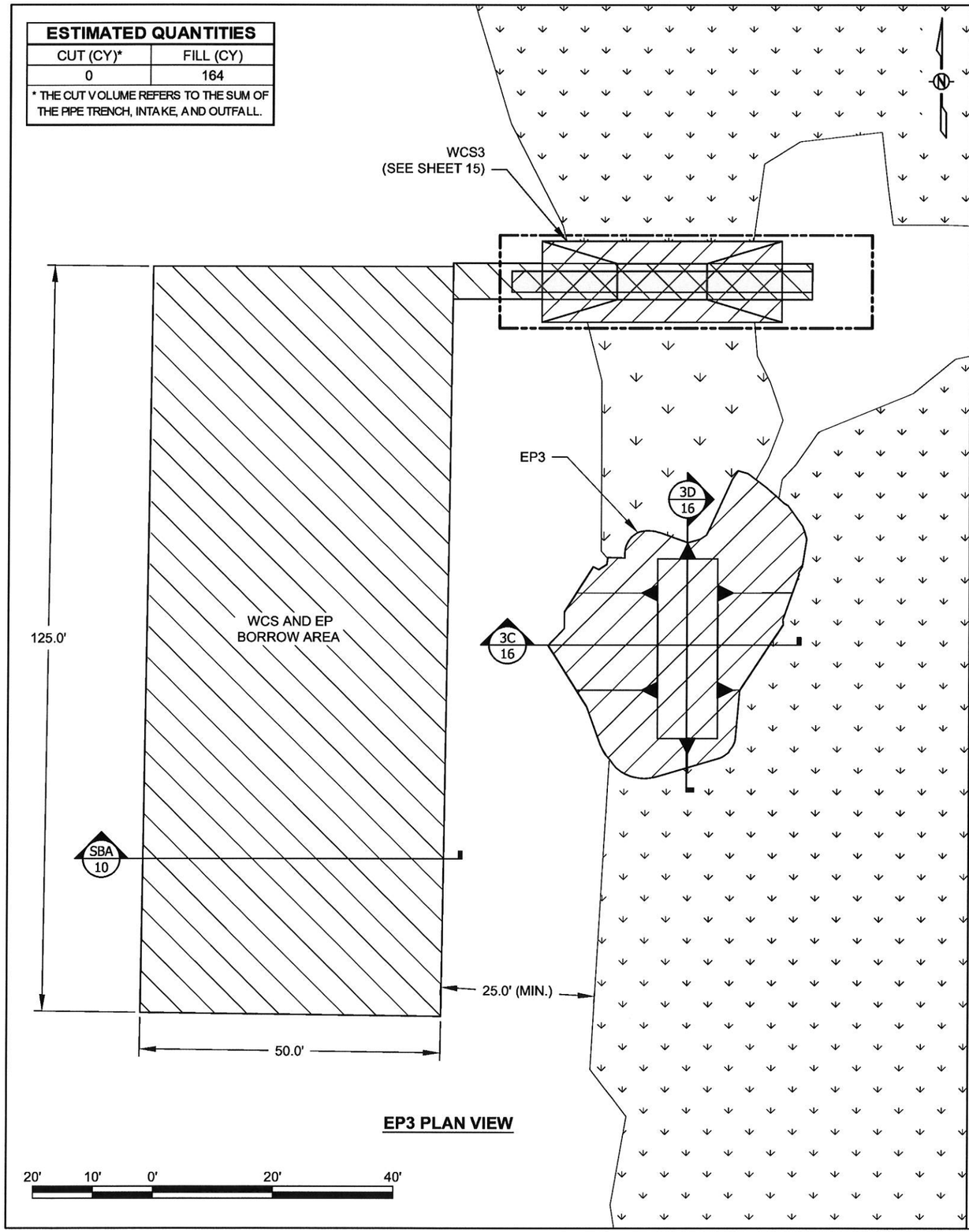

EP3 PLAN VIEW

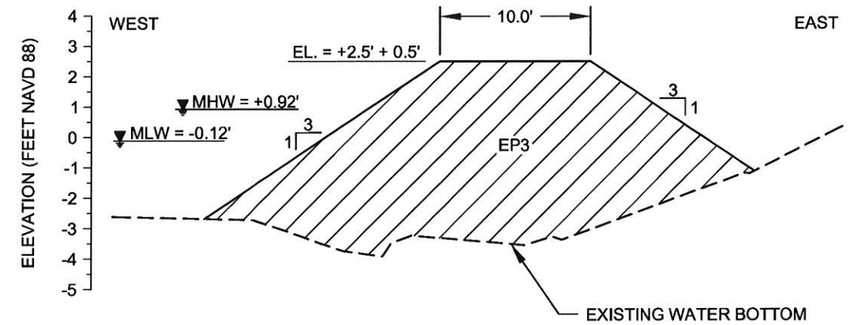

3C 16 EP3 SECTION

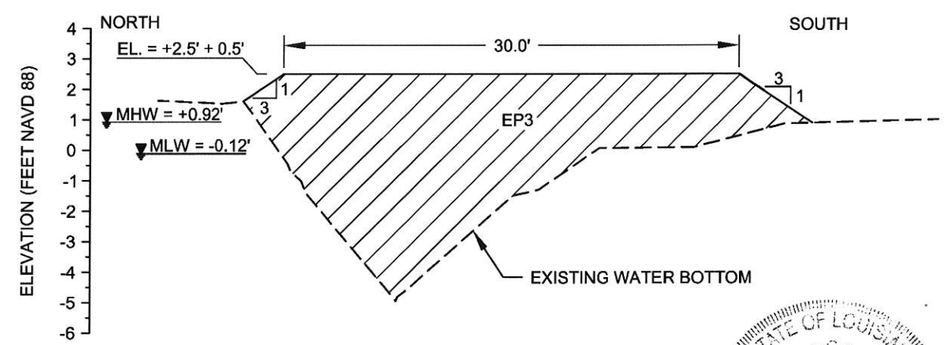

3D 16 EP3 PROFILE

STATE OF LOUISIANA
AMANDA M. TAYLOR
License No. 41999
PROFESSIONAL ENGINEER
IN
CIVIL ENGINEERING
2/22/2018

STATE OF LOUISIANA
SHANNON McCLAIN HAYNES
License No. 30552
PROFESSIONAL ENGINEER
IN
CIVIL ENGINEERING

HORIZONTAL GRAPHIC SCALE
10' 5' 0 10' 20'
5' 2.5' 0 5' 10'
VERTICAL GRAPHIC SCALE

REV.	DATE	DESCRIPTION	BY

COASTAL PROTECTION AND RESTORATION AUTHORITY
150 TERRACE AVENUE
BATON ROUGE, LOUISIANA 70802

EARTHEN PLUG 3
PLAN, PROFILE & SECTION

DESIGNED BY: AMANDA TAYLOR, P.E. - 0041999
APPROVED BY: SHANNON HAYNES, P.E. - 0030552

COLE'S BAYOU
MARSH RESTORATION PROJECT

STATE PROJECT NUMBER: TV-63
DRAWN BY: SHANE FAUST

DATE: FEB. 2018

SHEET 16 OF 50

ESTIMATED QUANTITIES			
CUT (CY)*	FILL (CY)	ACB MAT (SY)	GEOTEXTILE (SY)
22	206	341	375

* THE CUT VOLUME REFERS TO THE SUM OF THE PIPE TRENCH, INTAKE, & OUTFALL.

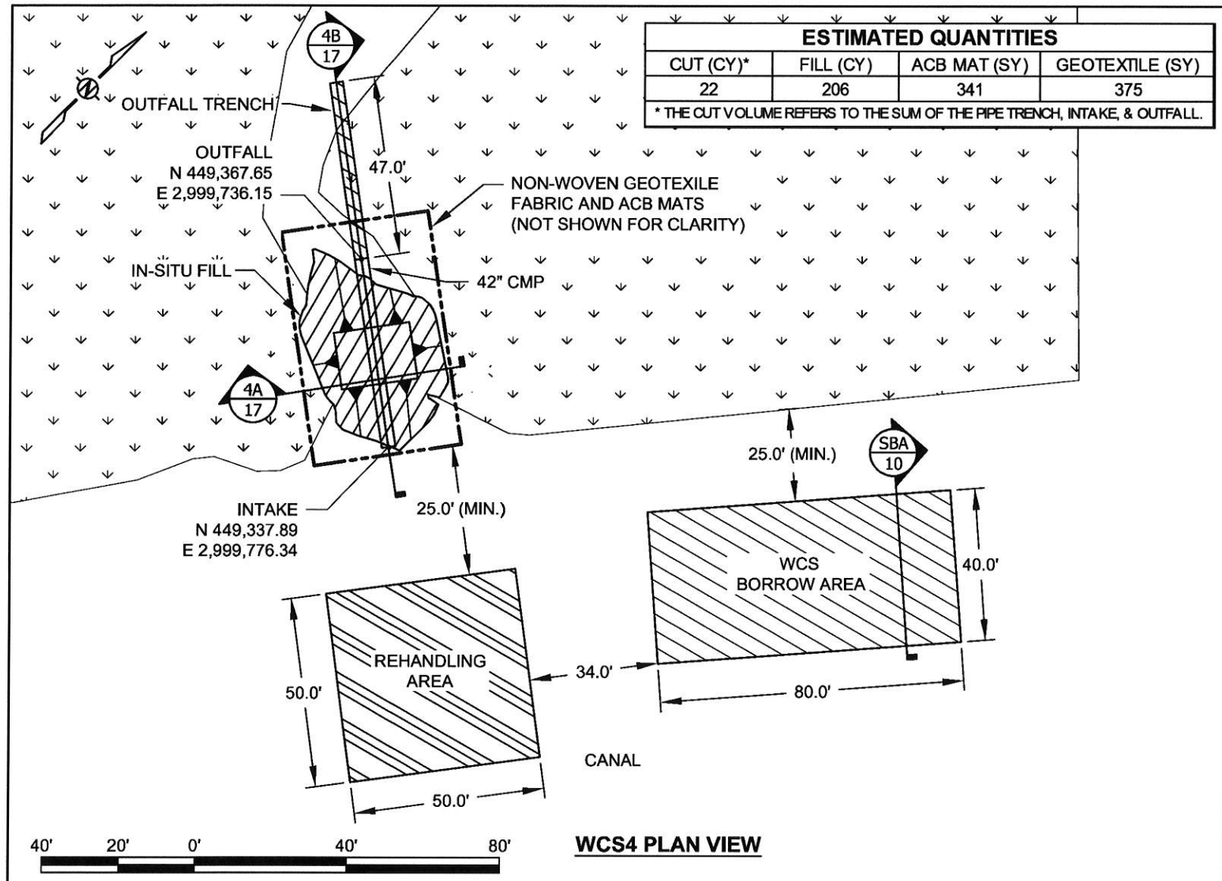

WCS4 PLAN VIEW

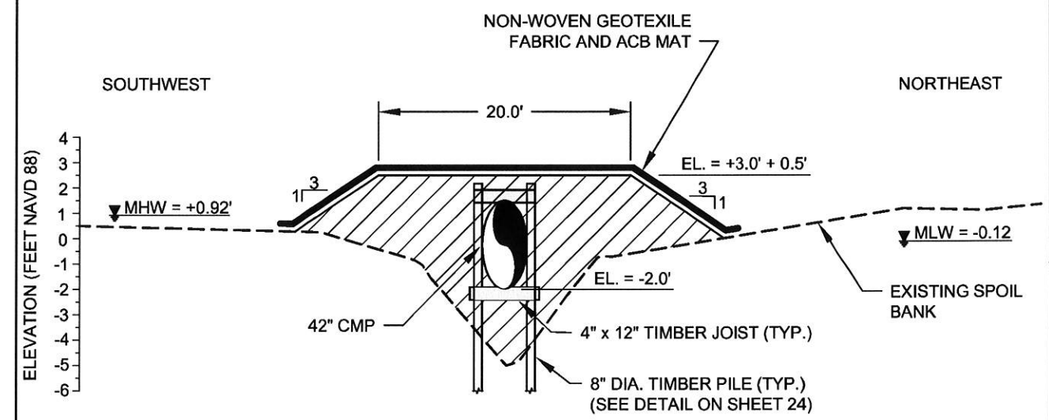

4A 17 WCS4 SECTION

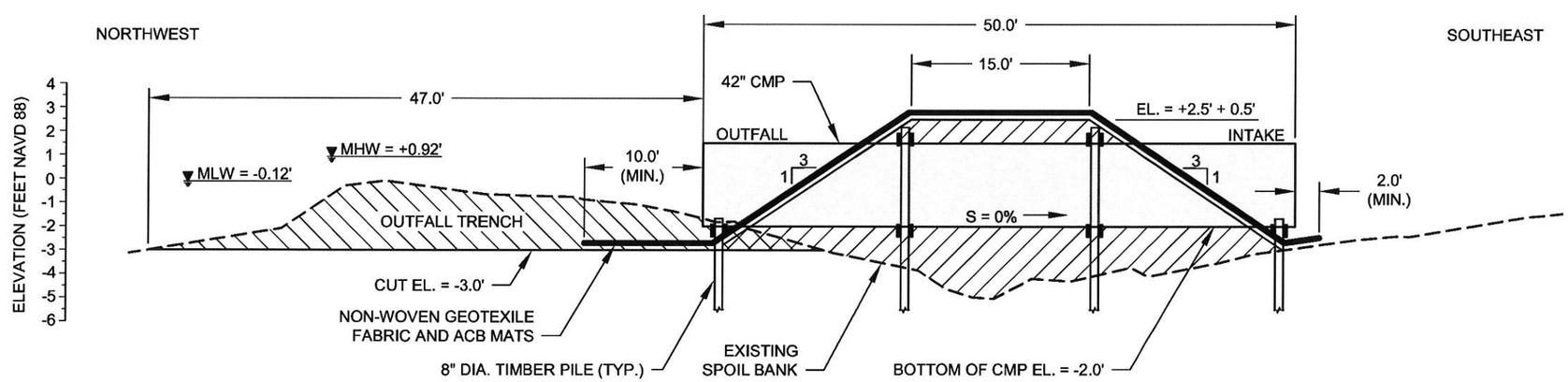

4B 17 WCS4 PROFILE

NOTES:
1. INTAKE AND OUTFALL COORDINATES DENOTE CENTERLINE OF PIPE.
2. ACB MAT DIMENSIONS SHALL BE 8' X 20'.
3. ACB MATS TO BE FIT/CUT AT EACH CMP INTAKE/OUTFALL.
4. SEE SHEET 24 FOR TIMBER PILE AND TIMBER JOIST DETAILS.

HORIZONTAL GRAPHIC SCALE
12' 6' 0 12' 24'
6' 3' 0 6' 12'
VERTICAL GRAPHIC SCALE

STATE OF LOUISIANA
AMANDA M. TAYLOR
License No 41999
PROFESSIONAL ENGINEER
IN
CIVIL ENGINEERING

STATE OF LOUISIANA
SHANNON McCLAIN HAYNES
License No. 30552
PROFESSIONAL ENGINEER
IN
CIVIL ENGINEERING

REV.	DATE	DESCRIPTION	BY

COASTAL PROTECTION AND RESTORATION AUTHORITY
150 TERRACE AVENUE
BATON ROUGE, LOUISIANA 70802

WATER STRUCTURE 4
PLAN, PROFILE & SECTION

DESIGNED BY: AMANDA TAYLOR, P.E. - 0041999
APPROVED BY: SHANNON HAYNES, P.E. - 0030552

COLE'S BAYOU
MARSH RESTORATION PROJECT

STATE PROJECT NUMBER: TV-63
DRAWN BY: SHANE FAUST

DATE: FEB. 2018

SHEET 17 OF 50

WCS 5				
	INTAKE		OUTFALL	
	NORTHING	EASTING	NORTHING	EASTING
A	449,100.32	3,002,321.71	449,055.41	3,002,299.78
B	449,096.82	3,002,328.85	449,051.89	3,002,306.92
C	449,093.35	3,002,335.99	449,048.41	3,002,314.06

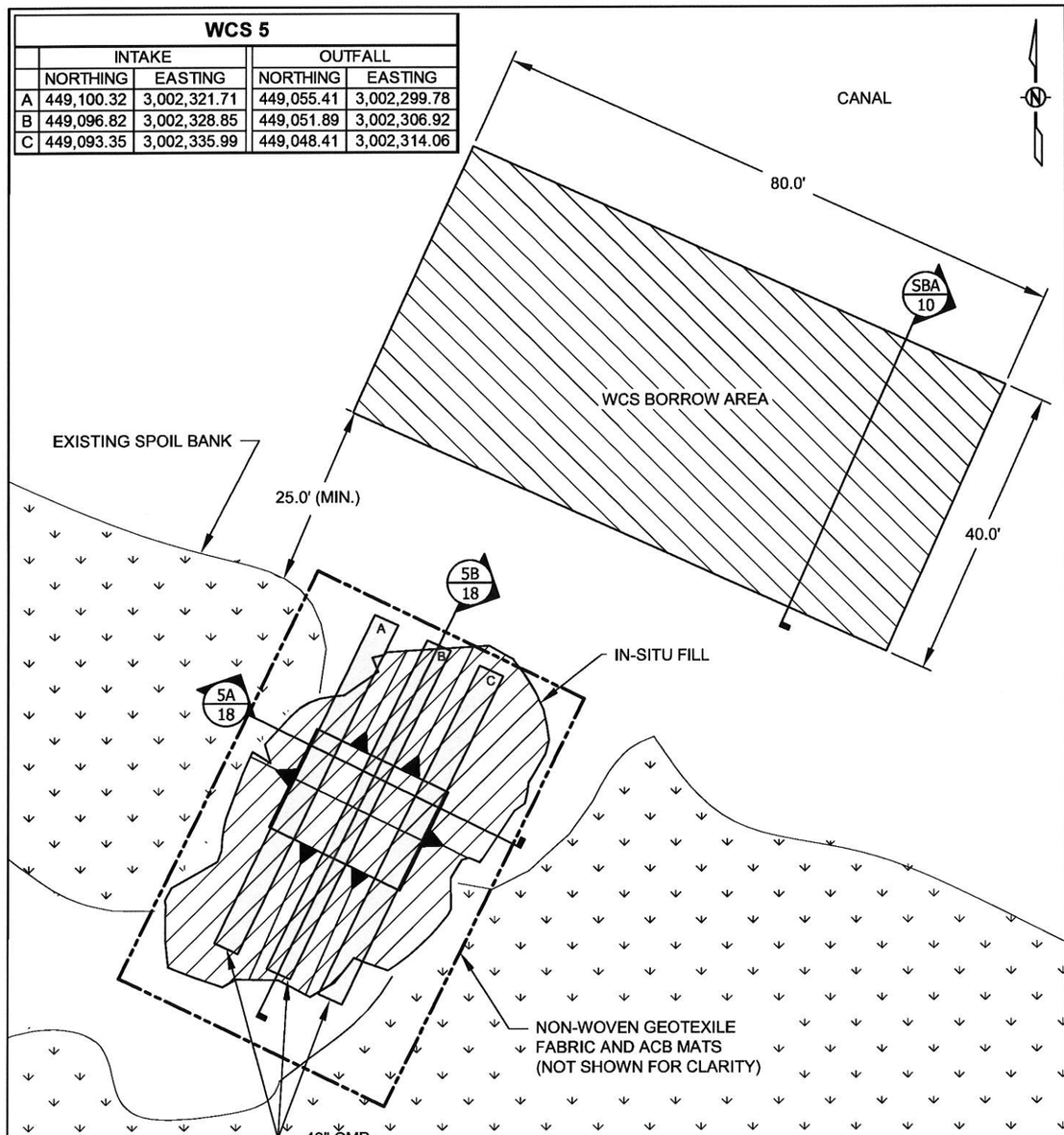

WCS5 PLAN VIEW

20' 10' 0' 20' 40'

NOTES:
1. THE INLINE CHECK VALVE SHALL BE PLACED INSIDE THE CMP A MINIMUM OF 6" FROM THE EDGE OF PIPE.
2. INTAKE AND OUTFALL COORDINATES DENOTE CENTERLINE OF PIPE.
3. ACB MAT DIMENSIONS SHALL BE 8' X 20'.
4. ACB MATS TO BE FIT/CUT AT EACH CMP INTAKE/OUTFALL.
5. SEE SHEET 24 FOR TIMBER PILE AND TIMBER JOIST DETAILS.

ESTIMATED QUANTITIES			
CUT (CY)*	FILL (CY)	ACB MAT (SY)	GEOTEXTILE (SY)
23	353	352	387

* THE CUT VOLUME REFERS TO THE SUM OF THE PIPE TRENCH, INTAKE, & OUTFALL.

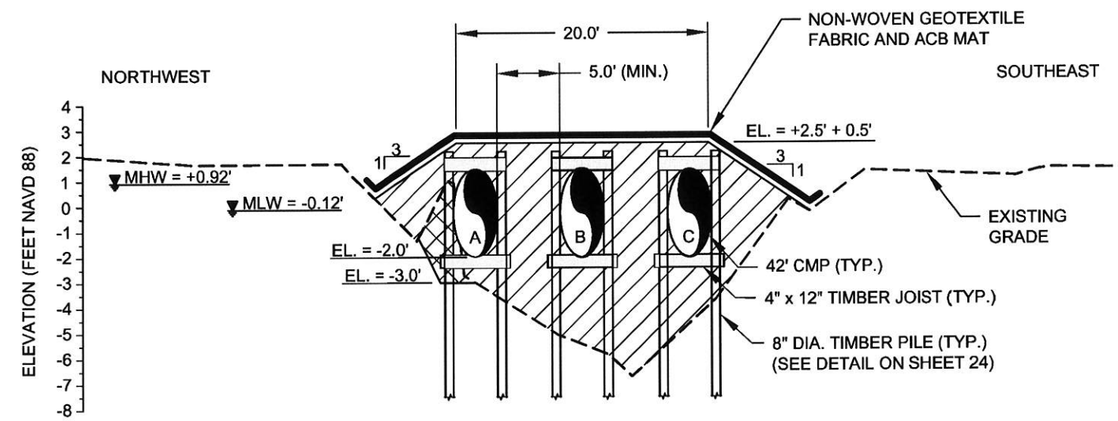

5A/18 WCS5 SECTION

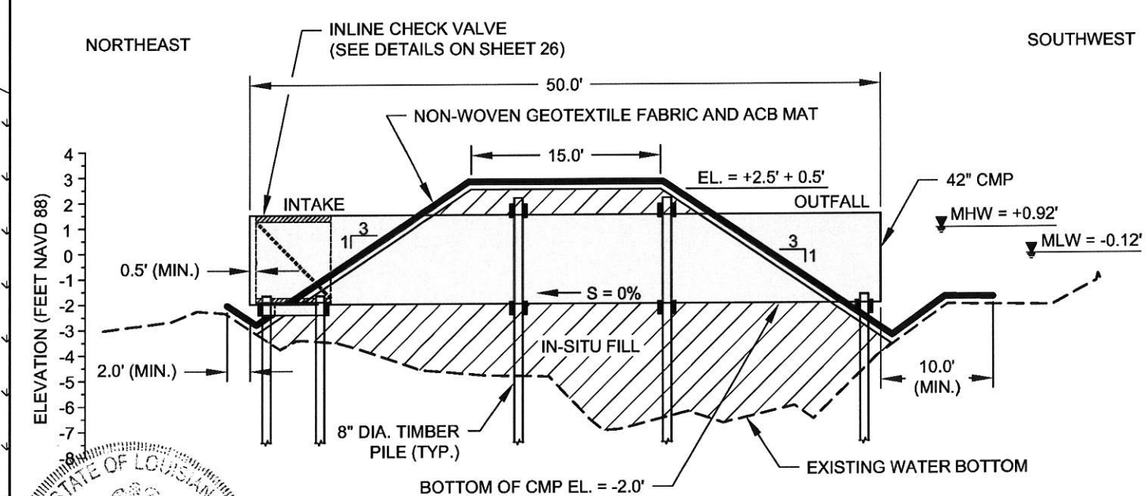

5B/18 WCS5 PROFILE

HORIZONTAL GRAPHIC SCALE
12' 6' 0 12' 24'
6' 3' 0 6' 12'
VERTICAL GRAPHIC SCALE

STATE OF LOUISIANA
AMANDA M. TAYLOR
License No. 41999
PROFESSIONAL ENGINEER
IN
CIVIL ENGINEERING

STATE OF LOUISIANA
SHANNON McCLAIN HAYNES
License No. 30552
PROFESSIONAL ENGINEER
IN
CIVIL ENGINEERING

REV.	DATE	DESCRIPTION	BY

COASTAL PROTECTION AND RESTORATION AUTHORITY
150 TERRACE AVENUE
BATON ROUGE, LOUISIANA 70802

WATER STRUCTURE 5
PLAN, PROFILE & SECTION

DESIGNED BY: AMANDA TAYLOR, P.E. - 0041999
APPROVED BY: SHANNON HAYNES, P.E. - 0030552

COLE'S BAYOU
MARSH RESTORATION PROJECT

STATE PROJECT NUMBER: TV-63
DRAWN BY: SHANE FAUST

DATE: FEB. 2018

SHEET 18 OF 50

ESTIMATED QUANTITIES			
CUT (CY)*	FILL (CY)	ACB MAT (SY)	GEOTEXTILE (SY)
423	219	308	339

* THE CUT VOLUME REFERS TO THE SUM OF THE PIPE TRENCH, INTAKE, & OUTFALL.

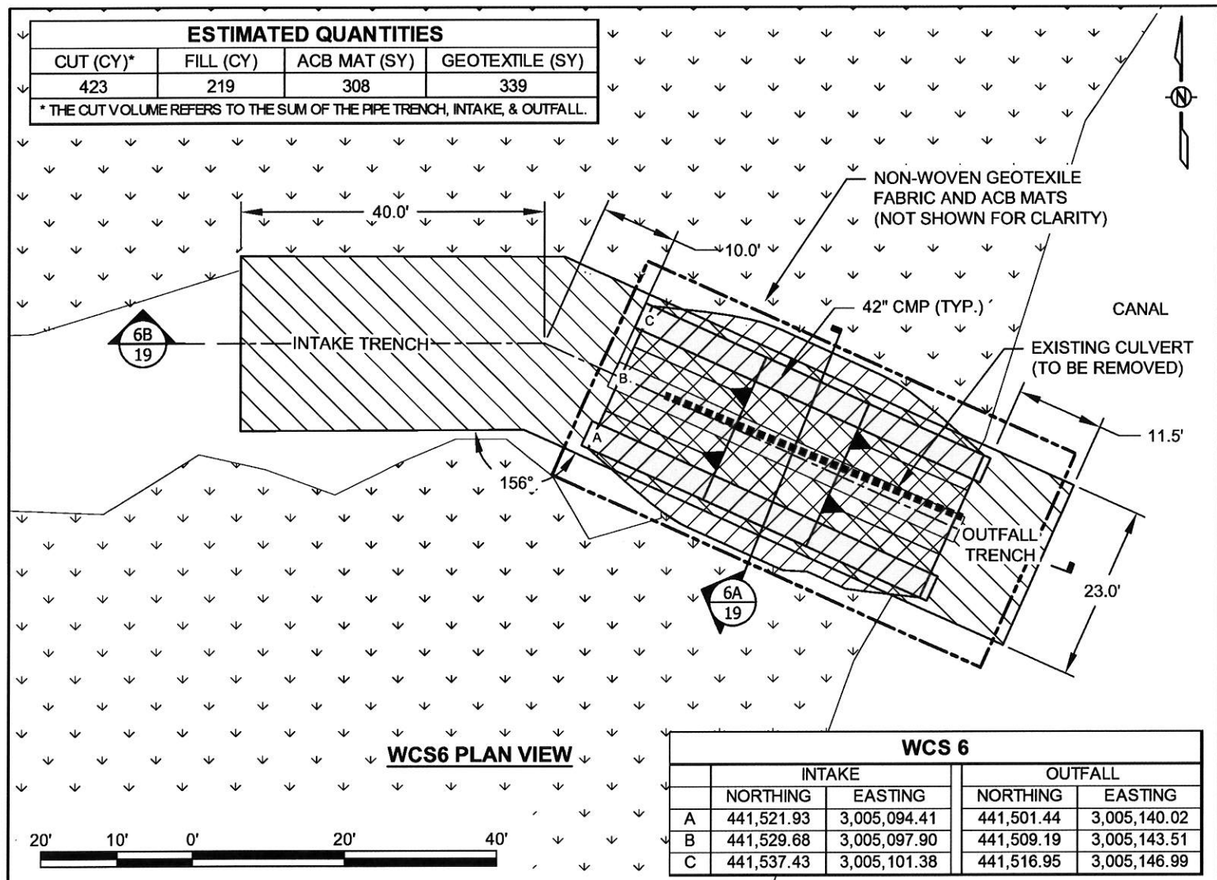

WCS6 PLAN VIEW

WCS 6				
	INTAKE		OUTFALL	
	NORTHING	EASTING	NORTHING	EASTING
A	441,521.93	3,005,094.41	441,501.44	3,005,140.02
B	441,529.68	3,005,097.90	441,509.19	3,005,143.51
C	441,537.43	3,005,101.38	441,516.95	3,005,146.99

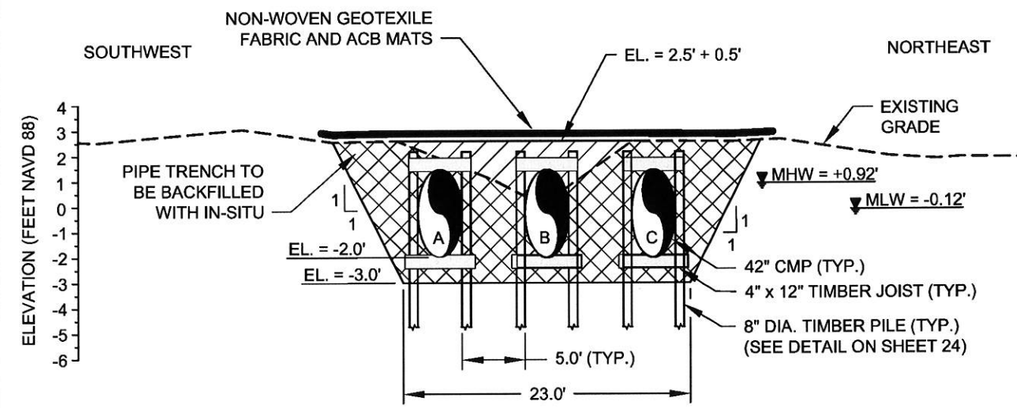

6A 19 **WCS6 SECTION**

STATE OF LOUISIANA
AMANDA M. TAYLOR
License No 41999
PROFESSIONAL ENGINEER
IN
CIVIL ENGINEERING

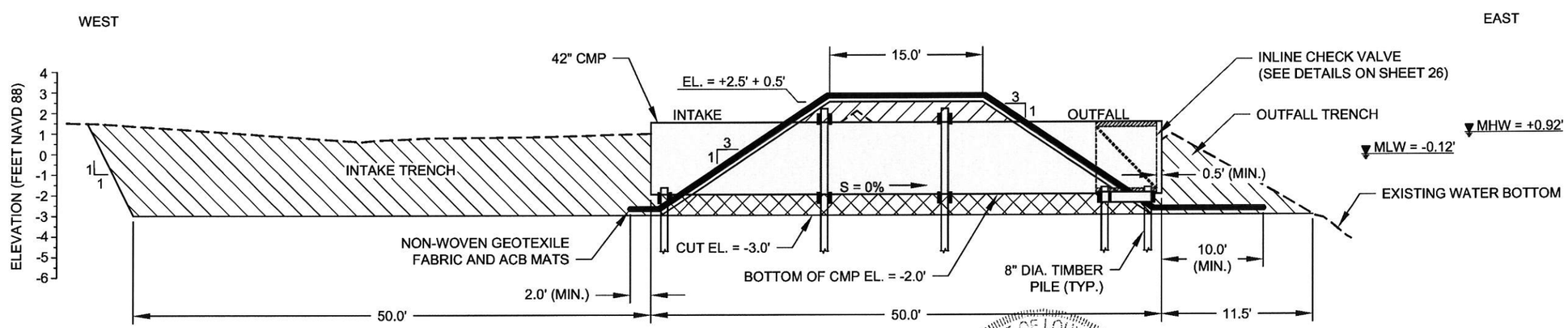

6B 19 **WCS6 PROFILE**

STATE OF LOUISIANA
SHANNON McCLAIN HAYNES
License No. 30552
PROFESSIONAL ENGINEER
IN
CIVIL ENGINEERING

HORIZONTAL GRAPHIC SCALE
12' 6' 0 12' 24'
6' 3' 0 6' 12'
VERTICAL GRAPHIC SCALE

NOTES:
1. THE INLINE CHECK VALVE SHALL BE PLACED INSIDE THE CMP A MINIMUM OF 6" FROM THE EDGE OF PIPE.
2. INTAKE AND OUTFALL COORDINATES DENOTE CENTERLINE OF PIPE.
3. ACB MAT DIMENSIONS SHALL BE 8' X 20'.
4. ACB MATS TO BE FIT/CUT AT EACH CMP INTAKE/OUTFALL.
5. SEE SHEET 24 FOR TIMBER PILE AND TIMBER JOIST DETAILS.

REV.	DATE	DESCRIPTION	BY

COASTAL PROTECTION AND RESTORATION AUTHORITY
150 TERRACE AVENUE
BATON ROUGE, LOUISIANA 70802

WATER STRUCTURE 6
PLAN, PROFILE & SECTION

DESIGNED BY: AMANDA TAYLOR, P.E. - 0041999
APPROVED BY: SHANNON HAYNES, P.E. - 0030552

COLE'S BAYOU
MARSH RESTORATION PROJECT

STATE PROJECT NUMBER: TV-63
DRAWN BY: SHANE FAUST

DATE: FEB. 2018

SHEET 19 OF 50

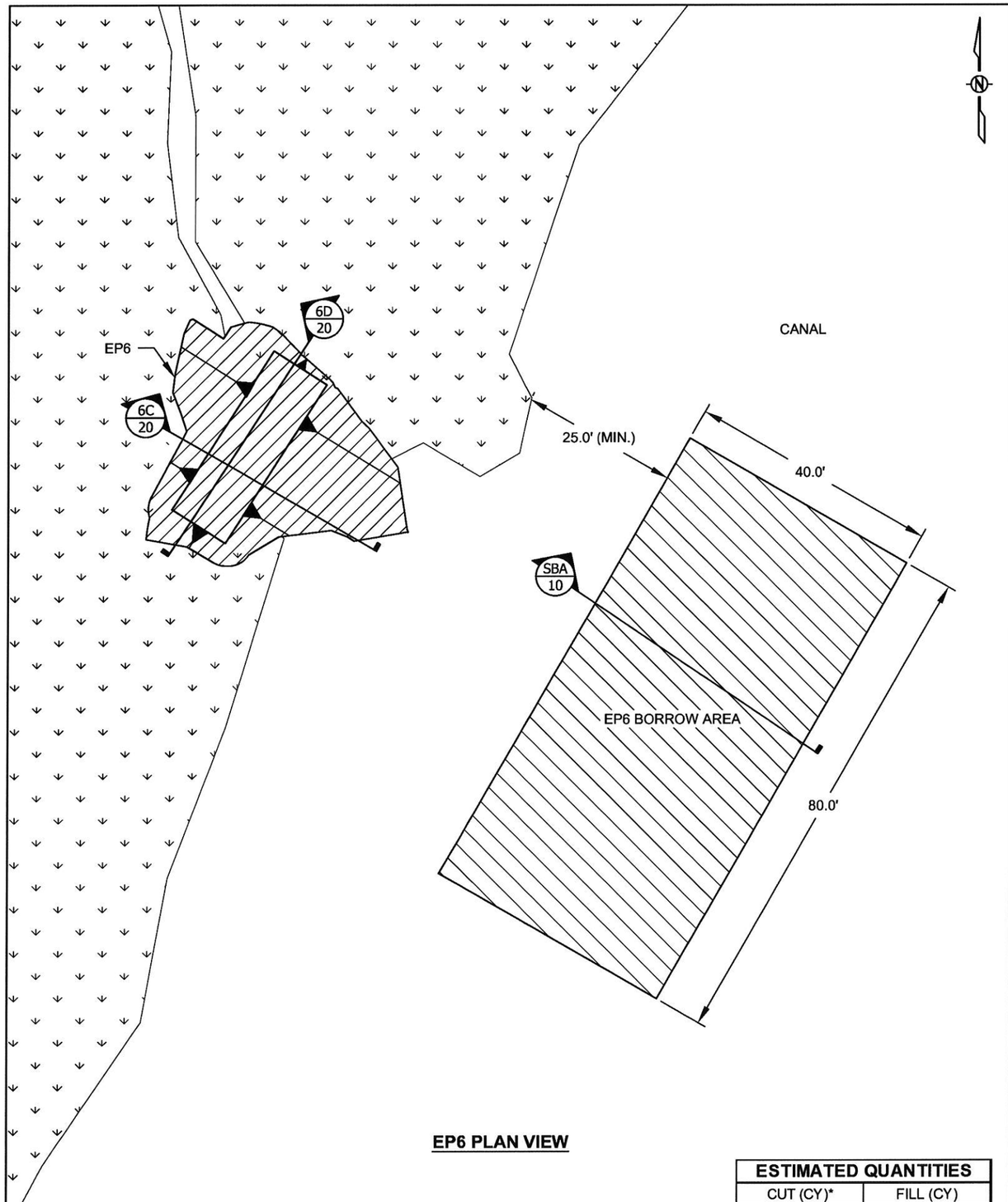

EP6 PLAN VIEW

ESTIMATED QUANTITIES	
CUT (CY)*	FILL (CY)
0	166

* THE CUT VOLUME REFERS TO THE SUM OF THE PIPE TRENCH, INTAKE, AND OUTFALL.

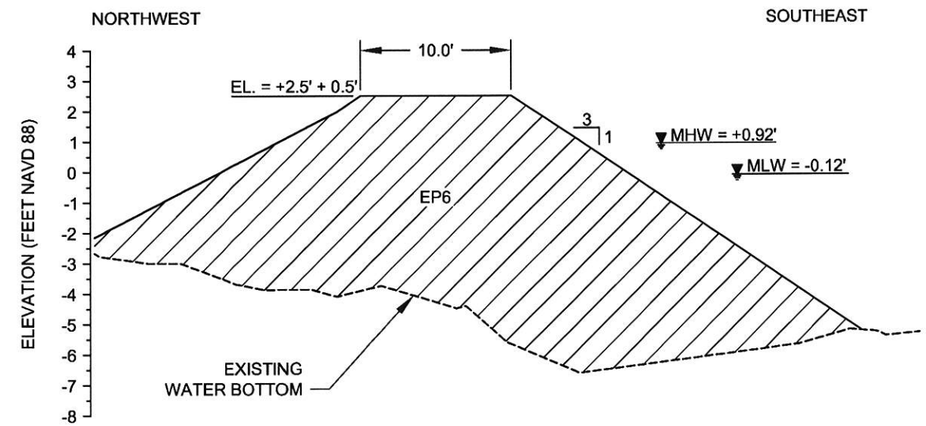

6C 20 **EP6 SECTION**

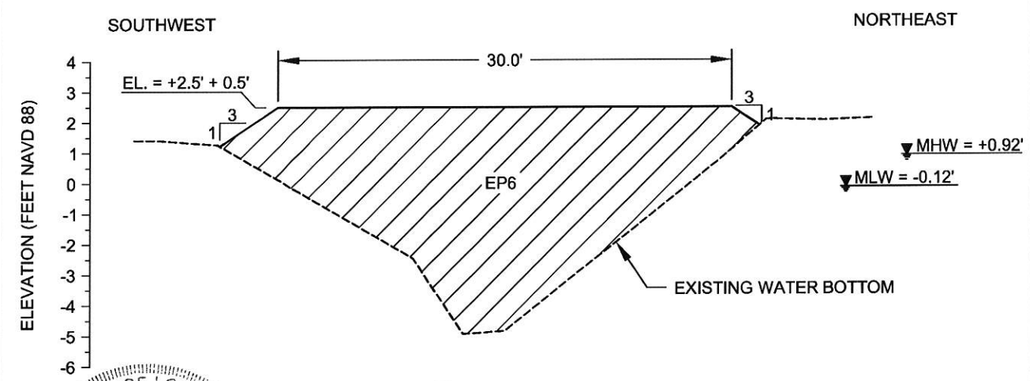

6D 20 **EP6 PROFILE**

HORIZONTAL GRAPHIC SCALE
10' 5' 0 10' 20'
5' 2.5' 0 5' 10'
VERTICAL GRAPHIC SCALE

STATE OF LOUISIANA
AMANDA M. TAYLOR
License No. 41999
PROFESSIONAL ENGINEER
IN
CIVIL ENGINEERING
2/22/2018

STATE OF LOUISIANA
SHANNON McCLAIN HAYNES
License No. 30852
PROFESSIONAL ENGINEER
IN
CIVIL ENGINEERING

REV.	DATE	DESCRIPTION	BY

COASTAL PROTECTION AND RESTORATION AUTHORITY
150 TERRACE AVENUE
BATON ROUGE, LOUISIANA 70802

EARTHEN PLUG 6
PLAN, PROFILE & SECTION

DESIGNED BY: AMANDA TAYLOR, P.E. - 0041999
APPROVED BY: SHANNON HAYNES, P.E. - 0030552

COLE'S BAYOU
MARSH RESTORATION PROJECT

STATE PROJECT NUMBER: TV-63
DRAWN BY: SHANE FAUST

DATE: FEB. 2018

SHEET 20 OF 50

WCS 7				
	INTAKE		OUTFALL	
	NORTHING	EASTING	NORTHING	EASTING
A	439,133.87	3,003,867.90	439,092.21	3,003,911.08
B	439,140.00	3,003,873.81	439,098.37	3,003,917.01
C	439,146.12	3,003,879.71	439,104.46	3,003,922.89

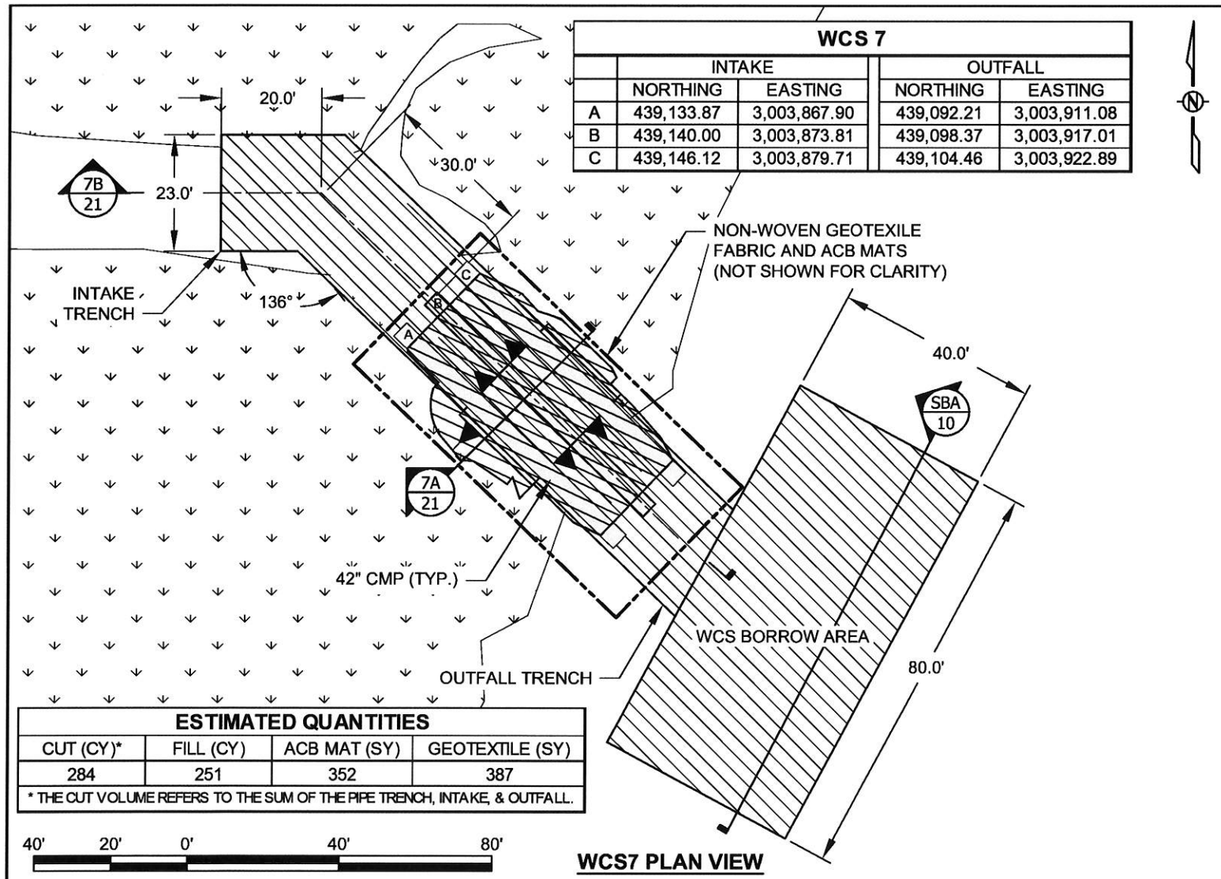

ESTIMATED QUANTITIES			
CUT (CY)*	FILL (CY)	ACB MAT (SY)	GEOTEXTILE (SY)
284	251	352	387
* THE CUT VOLUME REFERS TO THE SUM OF THE PIPE TRENCH, INTAKE, & OUTFALL.			

WCS7 PLAN VIEW

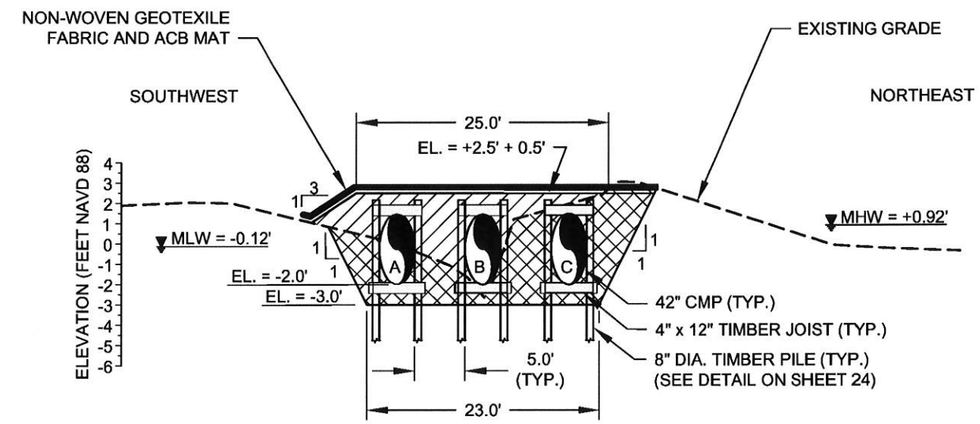

7A/21 WCS7 SECTION

STATE OF LOUISIANA
AMANDA M TAYLOR
License No 41999
PROFESSIONAL ENGINEER
IN
CIVIL ENGINEERING
2/22/2018

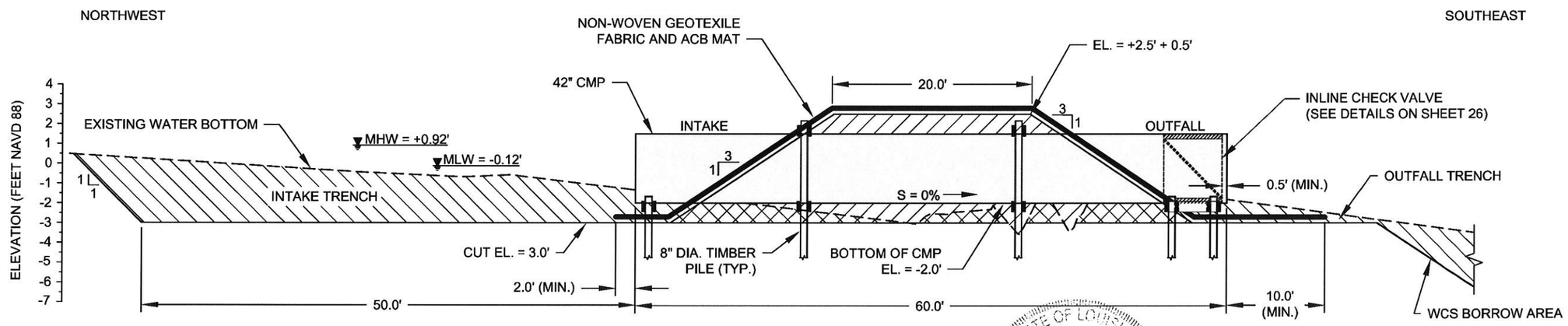

NOTES:
1. THE INLINE CHECK VALVE SHALL BE PLACED INSIDE THE CMP A MINIMUM OF 6" FROM THE EDGE OF PIPE.
2. INTAKE AND OUTFALL COORDINATES DENOTE CENTERLINE OF PIPE.
3. ACB MAT DIMENSIONS SHALL BE 8' X 20'.
4. ACB MATS TO BE FIT/CUT AT EACH CMP INTAKE/OUTFALL.
5. SEE SHEET 24 FOR TIMBER PILE AND TIMBER JOIST DETAILS.

7B/21 WCS7 PROFILE

STATE OF LOUISIANA
SHANNON McCLAIN HAYNES
License No. 30552
PROFESSIONAL ENGINEER
IN
2/22/2018

HORIZONTAL GRAPHIC SCALE
12' 6' 0 12' 24'
6' 3' 0 6' 12'
VERTICAL GRAPHIC SCALE

REV.	DATE	DESCRIPTION	BY

COASTAL PROTECTION AND RESTORATION AUTHORITY
150 TERRACE AVENUE
BATON ROUGE, LOUISIANA 70802

WATER STRUCTURE 7
PLAN, PROFILE & SECTION

DESIGNED BY: AMANDA TAYLOR, P.E. - 0041999
APPROVED BY: SHANNON HAYNES, P.E. - 0030552

COLE'S BAYOU
MARSH RESTORATION PROJECT

STATE PROJECT NUMBER: TV-63
DRAWN BY: SHANE FAUST

DATE: FEB. 2018

SHEET 21 OF 50

WCS 8				
	INTAKE		OUTFALL	
	NORTHING	EASTING	NORTHING	EASTING
A	437,798.01	2,999,654.70	437,738.39	2,999,648.27
B	437,797.03	2,999,663.07	437,737.47	2,999,656.73
C	437,796.17	2,999,671.60	437,736.56	2,999,665.09

ESTIMATED QUANTITIES			
CUT (CY)*	FILL (CY)	ACB MAT (SY)	GEOTEXTILE (SY)
580	173	363	399

* THE CUT VOLUME REFERS TO THE SUM OF THE PIPE TRENCH, INTAKE, & OUTFALL.

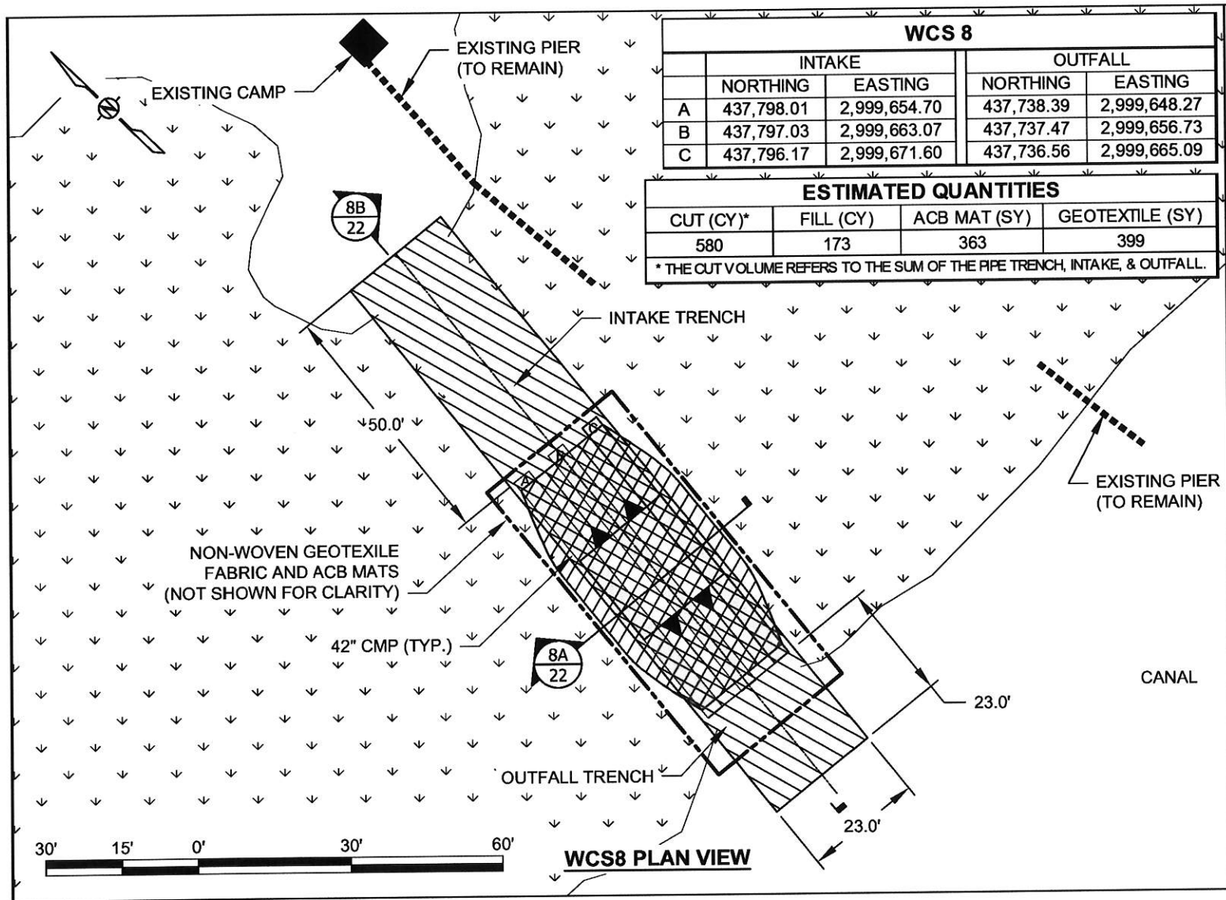

WCS8 PLAN VIEW

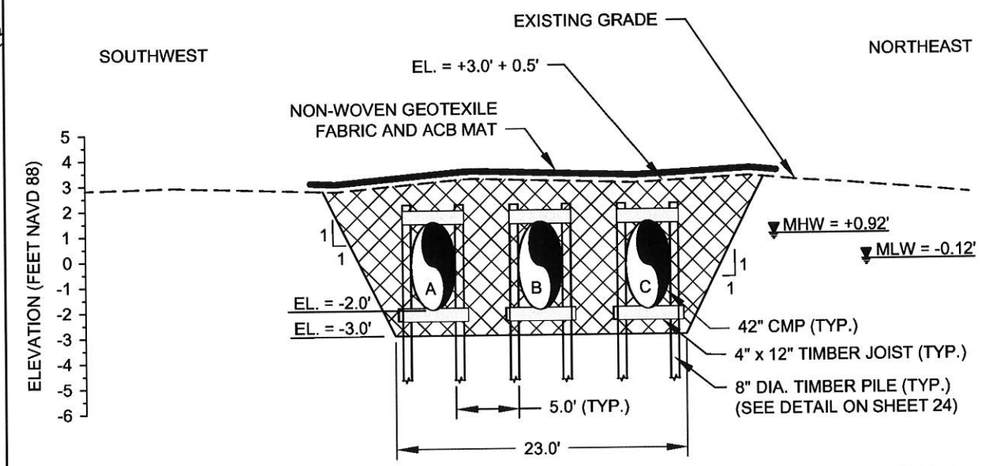

8A 22 WCS8 SECTION

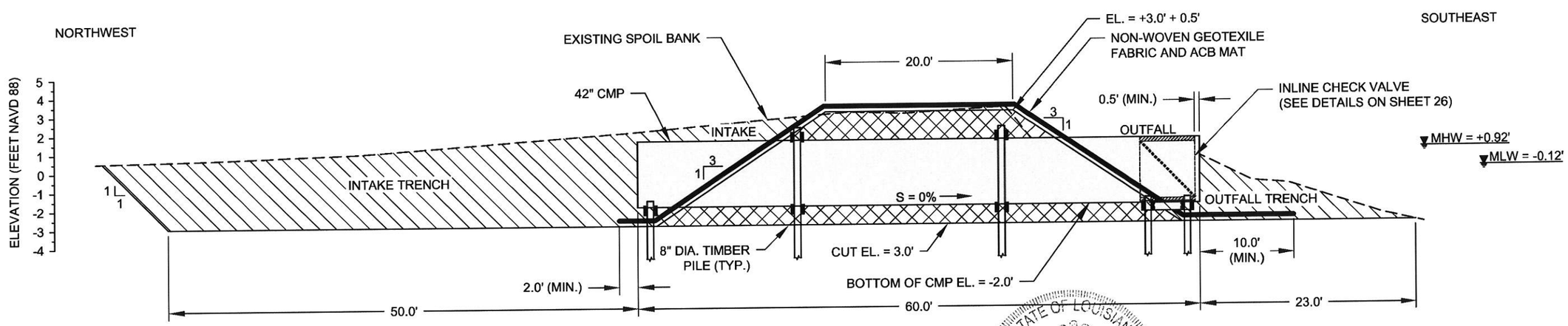

8B 22 WCS8 PROFILE

HORIZONTAL GRAPHIC SCALE
12' 6' 0 12' 24'
6' 3' 0 6' 12'
VERTICAL GRAPHIC SCALE

NOTES:
1. THE INLINE CHECK VALVE SHALL BE PLACED INSIDE THE CMP A MINIMUM OF 6" FROM THE EDGE OF PIPE.
2. INTAKE AND OUTFALL COORDINATES DENOTE CENTERLINE OF PIPE.
3. ACB MAT DIMENSIONS SHALL BE 8' X 20'.
4. ACB MATS TO BE FIT/CUT AT EACH CMP INTAKE/OUTFALL.
5. SEE SHEET 24 FOR TIMBER PILE AND TIMBER JOIST DETAILS.

STATE OF LOUISIANA
AMANDA M. TAYLOR
License No. 41999
PROFESSIONAL ENGINEER IN CIVIL ENGINEERING
2/22/2018

STATE OF LOUISIANA
SHANNON McCLAIN HAYNES
License No. 30552
PROFESSIONAL ENGINEER IN CIVIL ENGINEERING

REV.	DATE	DESCRIPTION	BY

COASTAL PROTECTION AND RESTORATION AUTHORITY
150 TERRACE AVENUE
BATON ROUGE, LOUISIANA 70802

WATER STRUCTURE 8
PLAN, PROFILE & SECTION

DESIGNED BY: AMANDA TAYLOR, P.E. - 0041999
APPROVED BY: SHANNON HAYNES, P.E. - 0030552

COLE'S BAYOU
MARSH RESTORATION PROJECT

STATE PROJECT NUMBER: TV-63
DRAWN BY: SHANE FAUST

DATE: FEB. 2018

SHEET 22 OF 50

WCS 9				
	INTAKE		OUTFALL	
	NORTHING	EASTING	NORTHING	EASTING
A	437,665.10	2,998,101.58	437,661.21	2,998,161.45
B	437,656.62	2,998,101.02	437,652.73	2,998,160.90
C	437,648.14	2,998,100.47	437,644.24	2,998,160.35

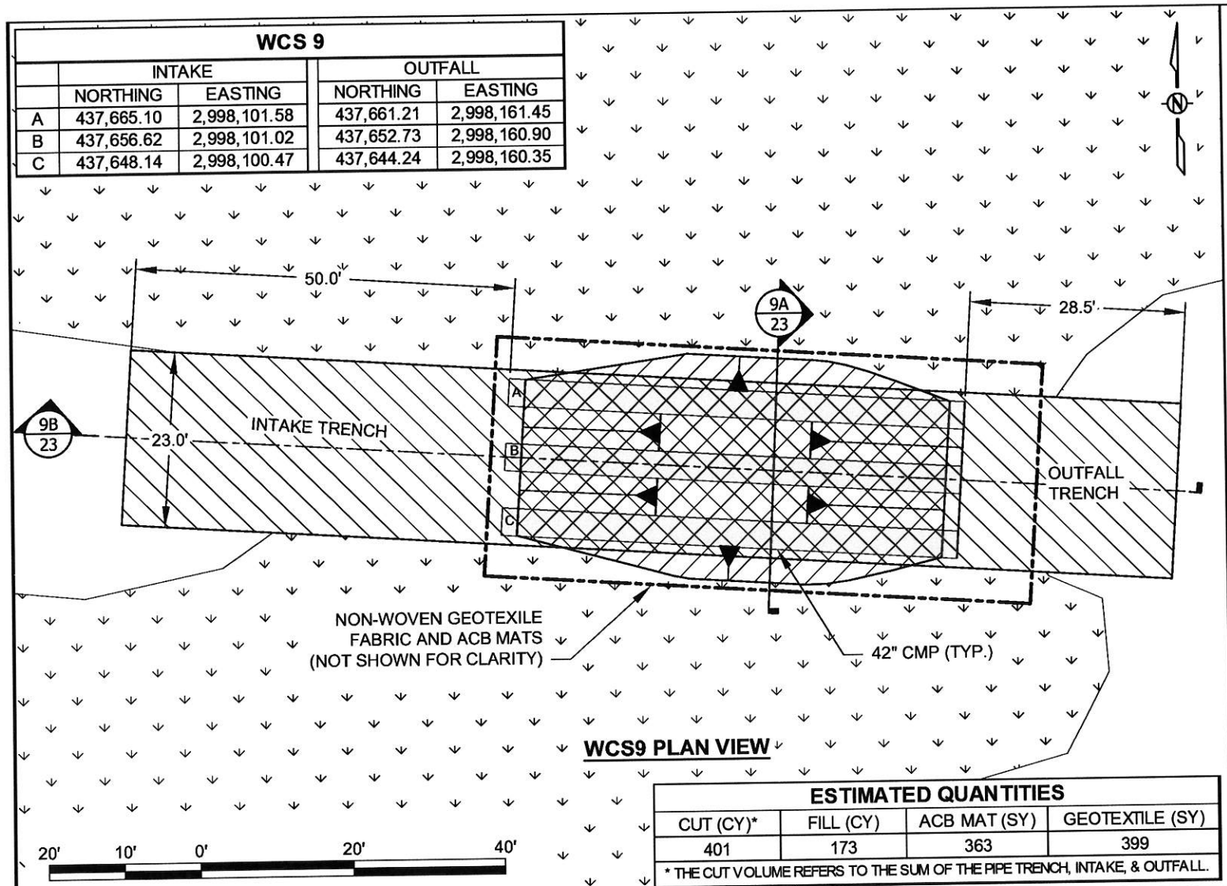

WCS9 PLAN VIEW

ESTIMATED QUANTITIES			
CUT (CY)*	FILL (CY)	ACB MAT (SY)	GEOTEXTILE (SY)
401	173	363	399

* THE CUT VOLUME REFERS TO THE SUM OF THE PIPE TRENCH, INTAKE, & OUTFALL.

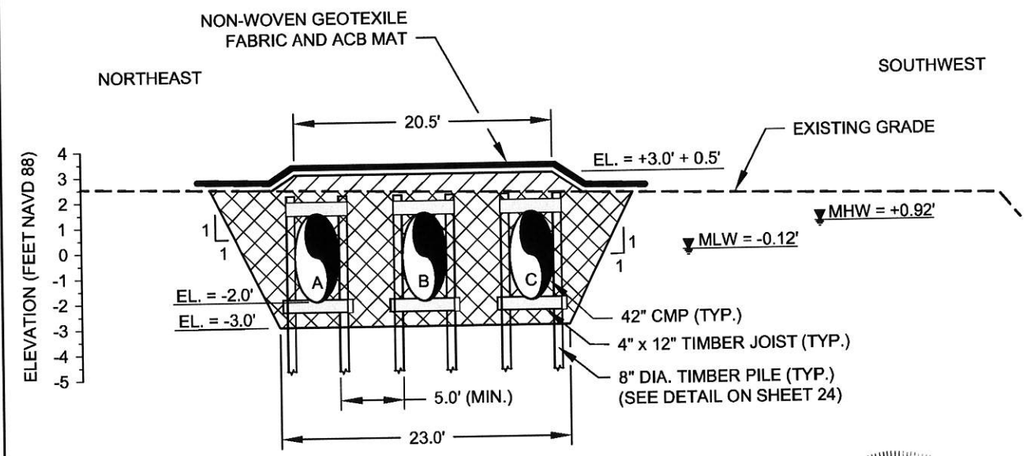

9A 23 WCS9 SECTION

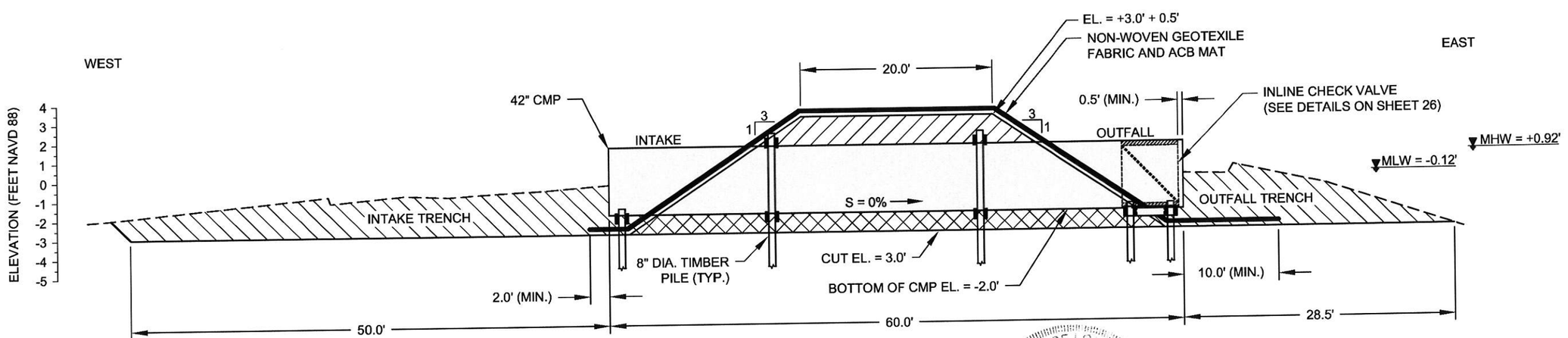

9B 23 WCS9 PROFILE

NOTES:
1. THE INLINE CHECK VALVE SHALL BE PLACED INSIDE THE CMP A MINIMUM OF 6" FROM THE EDGE OF PIPE.
2. INTAKE AND OUTFALL COORDINATES DENOTE CENTERLINE OF PIPE.
3. ACB MAT DIMENSIONS SHALL BE 8' X 20'.
4. ACB MATS TO BE FIT/CUT AT EACH CMP INTAKE/OUTFALL.
5. SEE SHEET 24 FOR TIMBER PILE AND TIMBER JOIST DETAILS.

STATE OF LOUISIANA
AMANDA M. TAYLOR
License No. 41999
PROFESSIONAL ENGINEER
IN
CIVIL ENGINEERING

STATE OF LOUISIANA
SHANNON McCLAIN HAYNES
License No. 30552
PROFESSIONAL ENGINEER
IN
CIVIL ENGINEERING

HORIZONTAL GRAPHIC SCALE
12' 6' 0 12' 24'
6' 3' 0 6' 12'
VERTICAL GRAPHIC SCALE

REV.	DATE	DESCRIPTION	BY

COASTAL PROTECTION AND RESTORATION AUTHORITY
150 TERRACE AVENUE
BATON ROUGE, LOUISIANA 70802

WATER STRUCTURE 9
PLAN, PROFILE & SECTION

DESIGNED BY: AMANDA TAYLOR, P.E. - 0041999
APPROVED BY: SHANNON HAYNES, P.E. - 0030552

COLE'S BAYOU
MARSH RESTORATION PROJECT

STATE PROJECT NUMBER: TV-63
DRAWN BY: SHANE FAUST

DATE: FEB. 2018

SHEET 23 OF 50

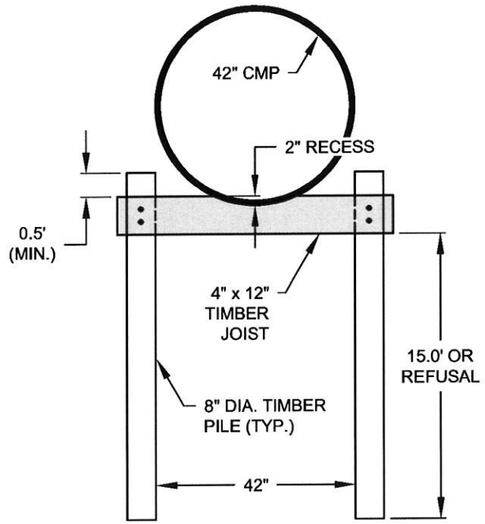

END OF PIPE
N.T.S

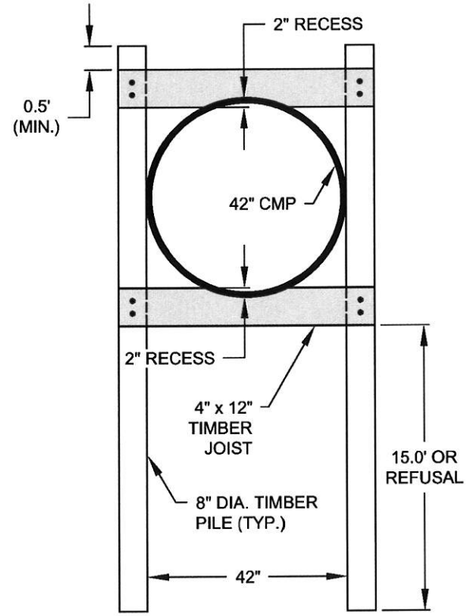

MIDDLE OF PIPE
N.T.S

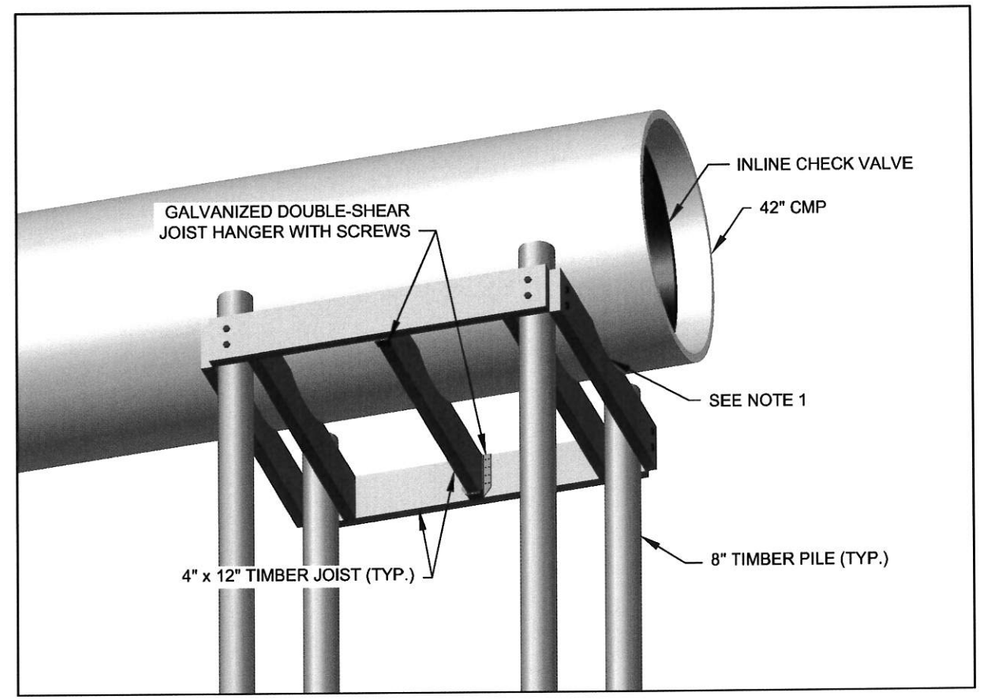

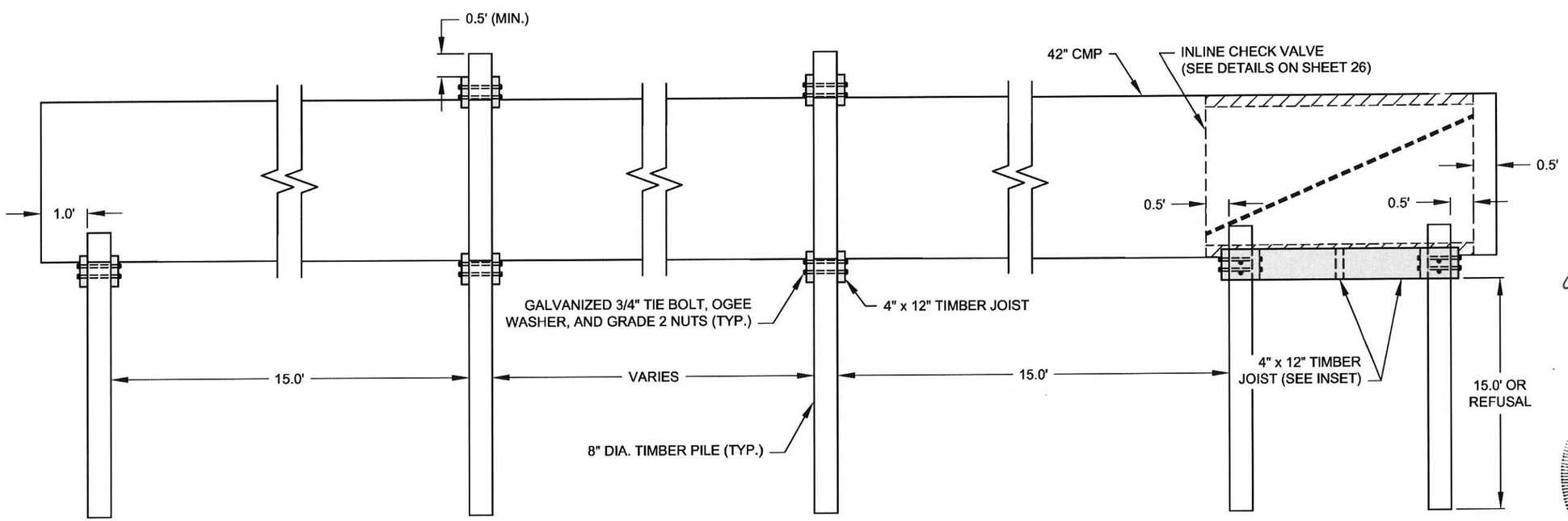

NOTES:
1. ALL CROSS WALERS SHALL BE RECESSED 2" AT THE LOCATION OF THE PIPE.

PROFILE OF PIPE
N.T.S

STATE OF LOUISIANA
AMANDA M. TAYLOR
License No. 41999
PROFESSIONAL ENGINEER
IN
CIVIL ENGINEERING
2/23/2018

STATE OF LOUISIANA
SHANNON McCLAIN HAYNES
License No. 30552
PROFESSIONAL ENGINEER
IN
CIVIL ENGINEERING

REV.	DATE	DESCRIPTION	BY

COASTAL PROTECTION AND RESTORATION AUTHORITY
150 TERRACE AVENUE
BATON ROUGE, LOUISIANA 70802

TIMBER PILE DETAILS

DESIGNED BY: AMANDA TAYLOR, P.E. - 0041999
APPROVED BY: SHANNON HAYNES, P.E. - 0030552

COLE'S BAYOU
MARSH RESTORATION PROJECT

STATE PROJECT NUMBER: TV-63
DRAWN BY: KRISTI CANTU

DATE: FEB. 2018

SHEET 24 OF 50

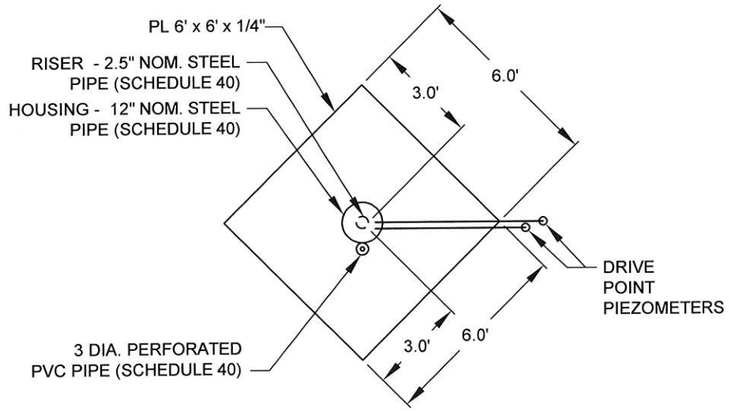

PLAN VIEW

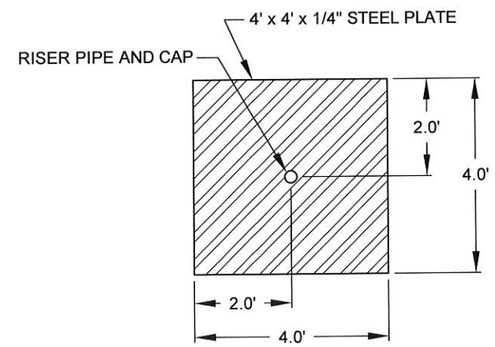

PLAN VIEW

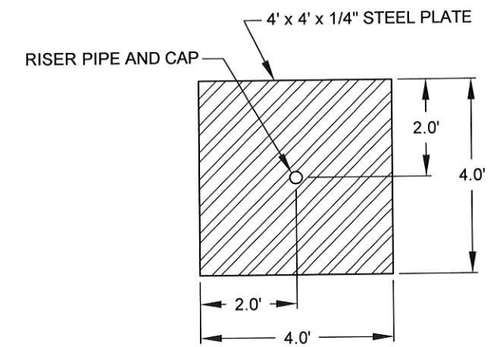

PLAN VIEW

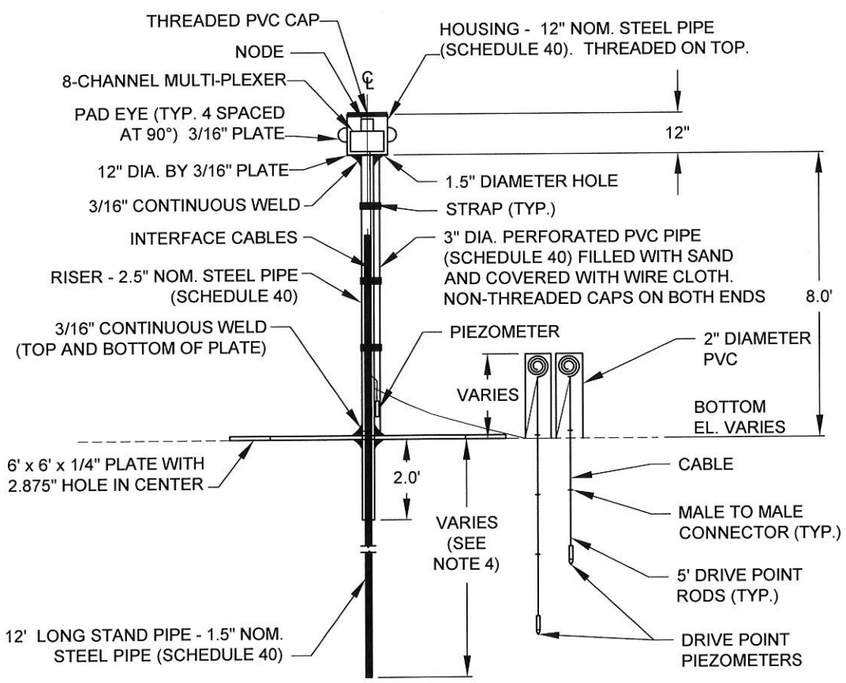

PROFILE VIEW

ISP
NTS

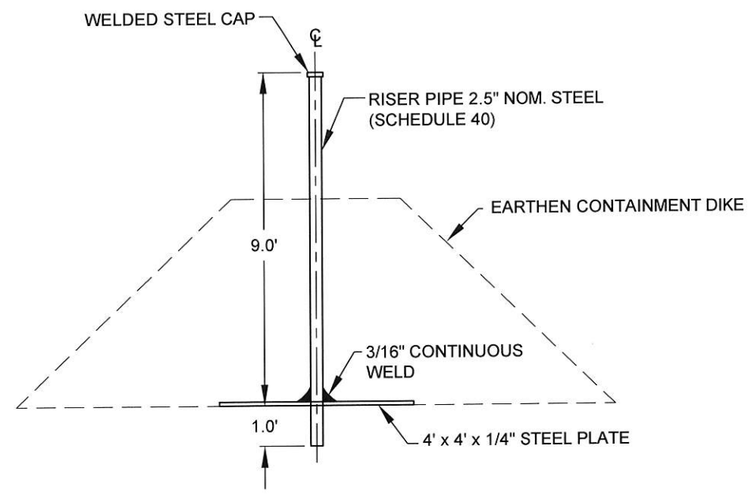

PROFILE VIEW

ECD SP
NTS

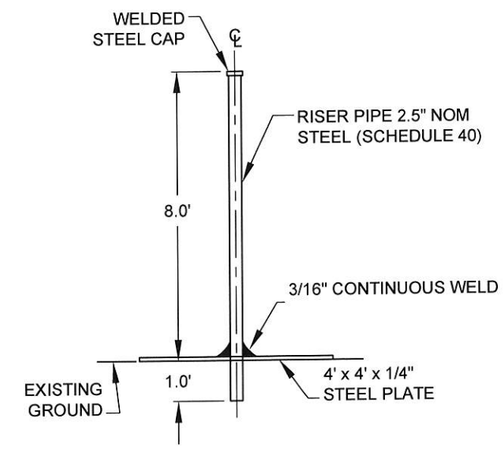

PROFILE VIEW

MCA SP
NTS

STATE OF LOUISIANA
AMANDA M. TAYLOR
License No 41999
PROFESSIONAL ENGINEER
IN
CIVIL ENGINEERING
2/22/2018

STATE OF LOUISIANA
SHANNON McCLAIN HAYNES
License No. 30552
PROFESSIONAL ENGINEER
IN
CIVIL ENGINEERING

NOTES:
1. SETTLEMENT PLATES SHALL BE INSTALLED AT THE LOCATIONS SHOWN ON THE PLANS.
2. INSTRUMENTED SETTLEMENT PLATES TO BE INSTALLED IN MCA3 AT THE LOCATIONS SHOWN ON THE PLANS.
3. CONTRACTOR SHALL FABRICATE INSTRUMENTED SETTLEMENT PLATES AND PROCURE INSTRUMENTATION. CPRA IS TO INSTALL INSTRUMENTATION ONTO SETTLEMENT PLATES IN THE FIELD WITH ASSISTANCE FROM CONTRACTOR.
4. CONTRACTOR TO DRIVE STAND PIPE BELOW GRADE TO THE DEPTH DETERMINED BY THE ENGINEER IN THE FIELD.

REV.	DATE	DESCRIPTION	BY

COASTAL PROTECTION AND RESTORATION AUTHORITY
150 TERRACE AVENUE
BATON ROUGE, LOUISIANA 70802

SETTLEMENT PLATE DETAILS

DESIGNED BY: AMANDA TAYLOR, P.E. - 0041999
APPROVED BY: SHANNON HAYNES, P.E. - 0030502

COLE'S BAYOU
MARSH RESTORATION PROJECT

STATE PROJECT NUMBER: TV-63
DRAWN BY: SHANE FAUST

DATE: FEB. 2018

SHEET 25 OF 50

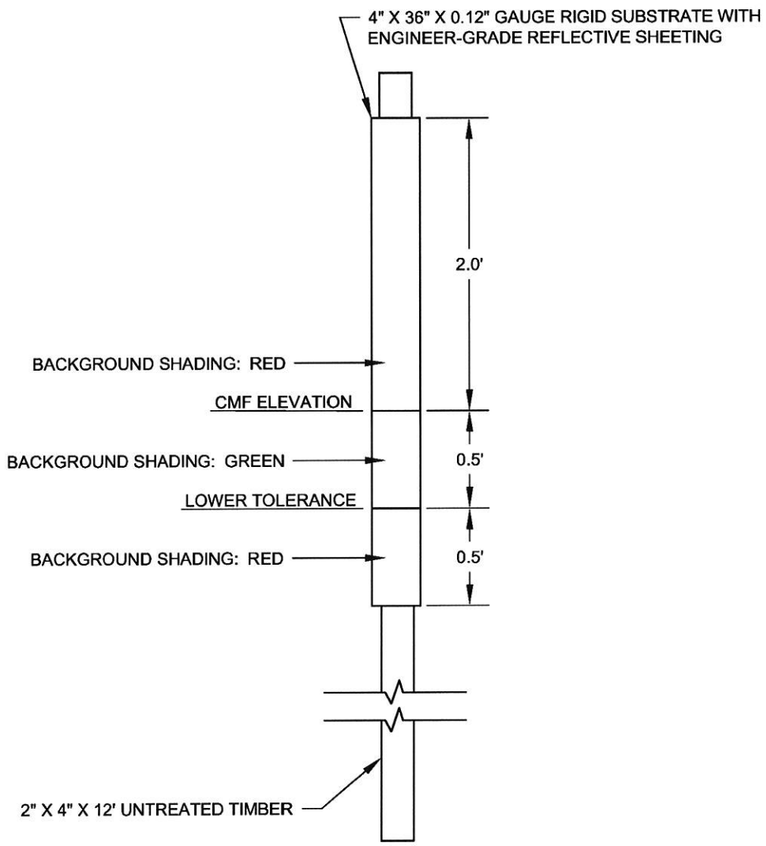

GRADE STAKE
NTS

GRADE STAKES	
MCA	CMF ELEVATION (NAVD88)
1	+2.0
2	+2.0
3	+2.5

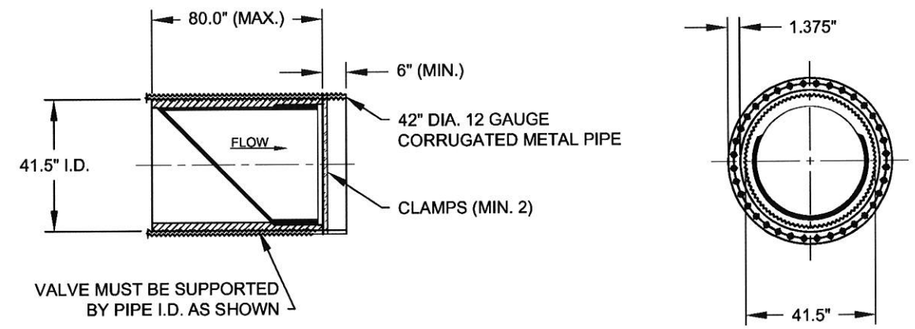

42" INLINE CHECK VALVE
NTS

NOTE:
CONTRACTOR TO COORDINATE WITH IN-LINE VALVE MANUFACTURER PRIOR TO PROCUREMENT.

STATE OF LOUISIANA
AMANDA M. TAYLOR
License No 41999
PROFESSIONAL ENGINEER
IN
CIVIL ENGINEERING
2/22/2018

STATE OF LOUISIANA
SHANNON McCLAIN HAYNES
License No. 30552
PROFESSIONAL ENGINEER
IN
CIVIL ENGINEERING

REV.	DATE	DESCRIPTION	BY

COASTAL PROTECTION AND RESTORATION AUTHORITY
150 TERRACE AVENUE
BATON ROUGE, LOUISIANA 70802

GRADE STAKE & INLINE CHECK VALVE DETAILS

DESIGNED BY: AMANDA TAYLOR, P.E. - 0041999
APPROVED BY: SHANNON HAYNES, P.E. - 0030502

COLE'S BAYOU
MARSH RESTORATION PROJECT

STATE PROJECT NUMBER: TV-63
DRAWN BY: SHANE FAUST

DATE: FEB. 2018

SHEET 26 OF 50

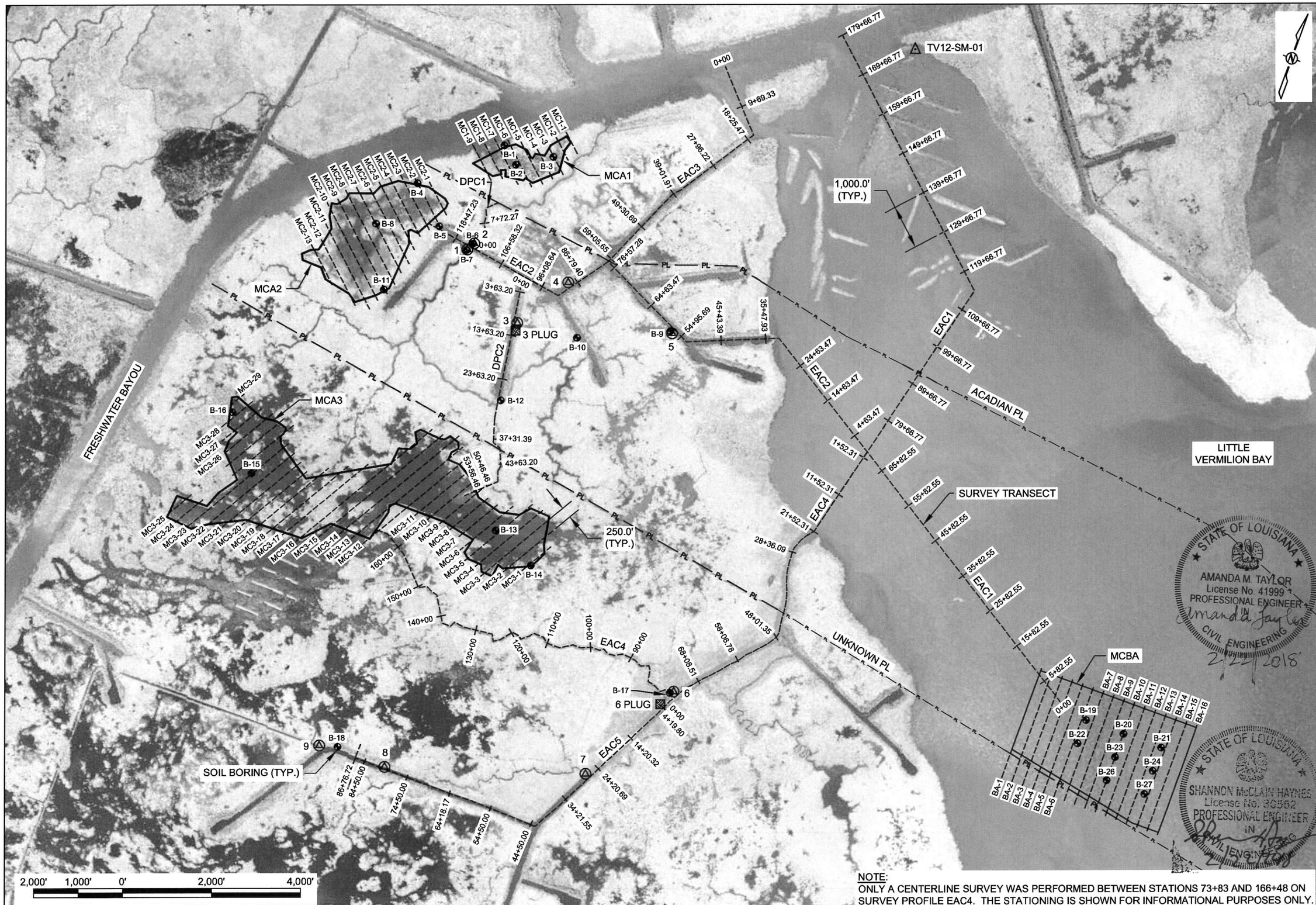

NOTE:
ONLY A CENTERLINE SURVEY WAS PERFORMED BETWEEN STATIONS 73+83 AND 166+48 ON SURVEY PROFILE EAC4. THE STATIONING IS SHOWN FOR INFORMATIONAL PURPOSES ONLY.

REV.	DATE	DESCRIPTION	BY

COASTAL PROTECTION AND RESTORATION AUTHORITY
150 TERRACE AVENUE
BATON ROUGE, LOUISIANA 70802

DESIGN SURVEY LAYOUT

DESIGNED BY: AMANDA TAYLOR, P.E. - 0041999
APPROVED BY: SHANNON HAYNES, P.E. - 0030552

COLE'S BAYOU
MARSH RESTORATION PROJECT

STATE PROJECT NUMBER: TV-63
DRAWN BY: SHANE FAUST

DATE: FEB. 2018

SHEET 27 OF 50

SETTLEMENT PLATE COORDINATES

	NORTHING	EASTING
SP-1	451,655.80	2,997,106.64
SP-2	452,160.14	2,998,519.67
SP-3	448,931.05	2,995,046.62
SP-4	448,128.78	2,996,010.04
SP-5	443,244.72	2,999,453.59
SP-6	443,618.28	2,999,804.81
SP-7	442,678.16	2,994,771.76
SP-8	444,342.97	2,993,784.37

INSTRUMENTED SETTLEMENT PLATE COORDINATES

	NORTHING	EASTING
ISP-1	443,837.33	2,993,763.05
ISP-2	442,661.88	2,994,471.44
ISP-3	443,344.39	3,001,297.98
ISP-4	443,434.39	2,999,893.51

GRADE STAKES

MCA	NUMBER IN EACH AREA
1	8
2	22
3	57

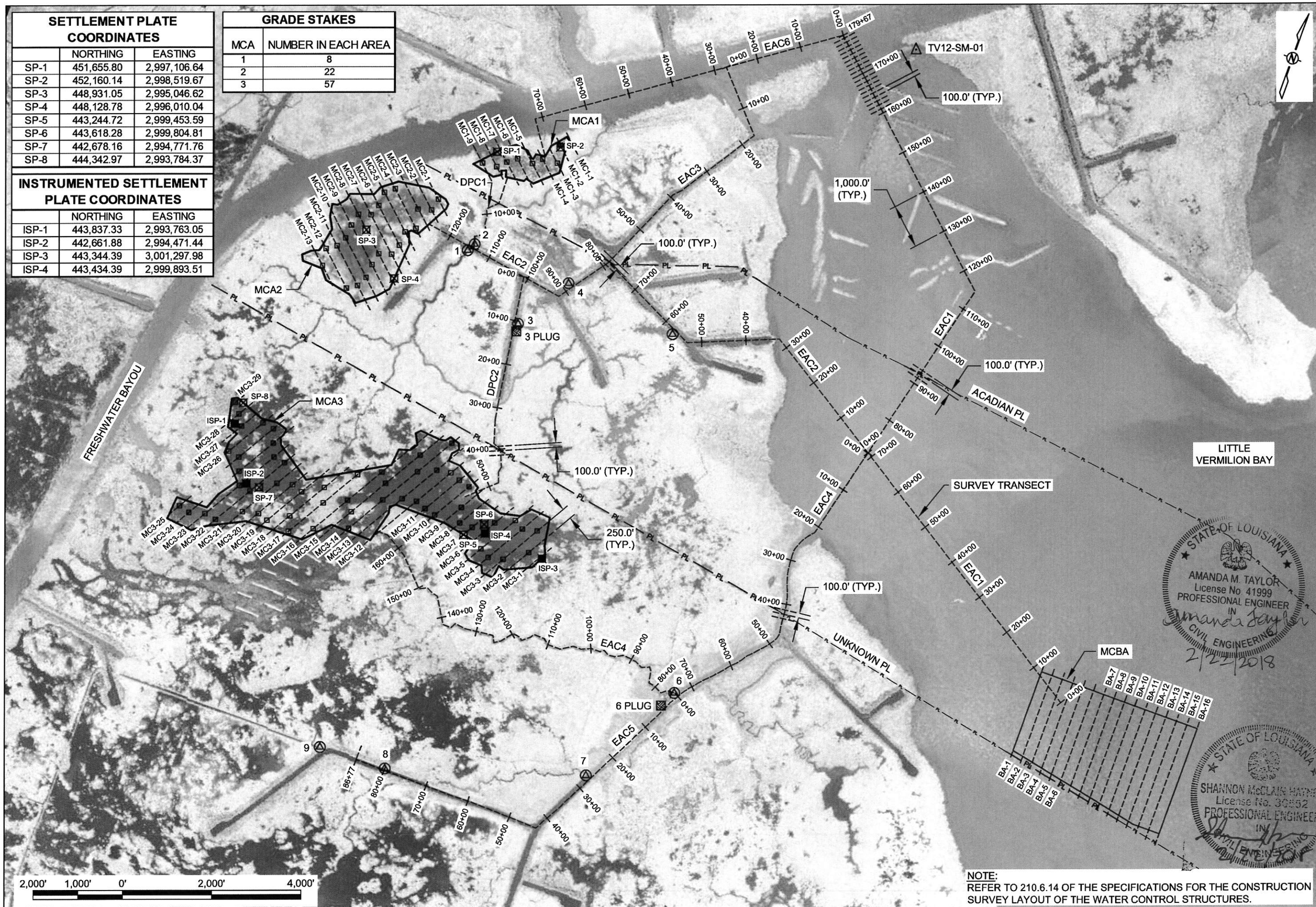

NOTE:
REFER TO 210.6.14 OF THE SPECIFICATIONS FOR THE CONSTRUCTION SURVEY LAYOUT OF THE WATER CONTROL STRUCTURES.

REV.	DATE	DESCRIPTION	BY

COASTAL PROTECTION AND RESTORATION AUTHORITY
150 TERRACE AVENUE
BATON ROUGE, LOUISIANA 70802

CONSTRUCTION SURVEY LAYOUT

DESIGNED BY: AMANDA TAYLOR, P.E. - 0041999
APPROVED BY: SHANNON HAYNES, P.E. - 0030552

COLE'S BAYOU MARSH RESTORATION PROJECT

STATE PROJECT NUMBER: TV-63
DRAWN BY: SHANE FAUST

DATE: FEB. 2018

SHEET 28 OF 50

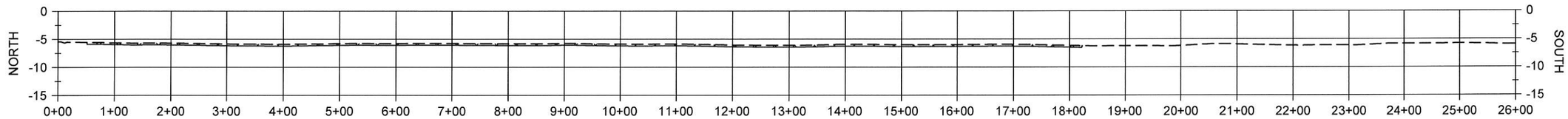

BA-1

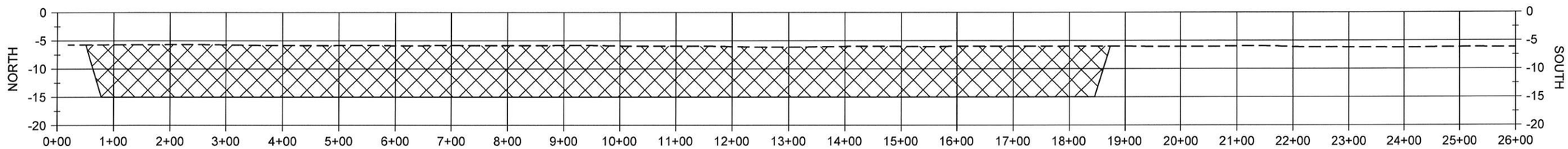

BA-2

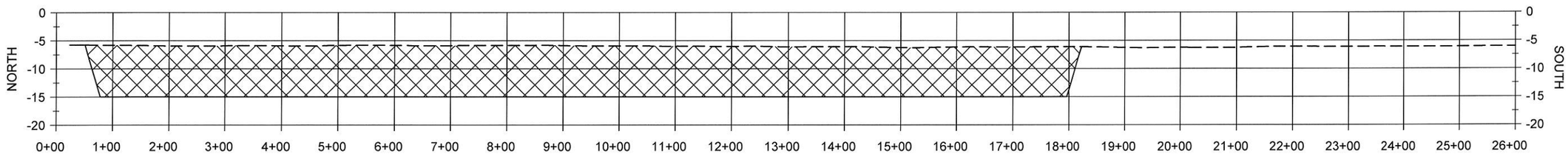

BA-3

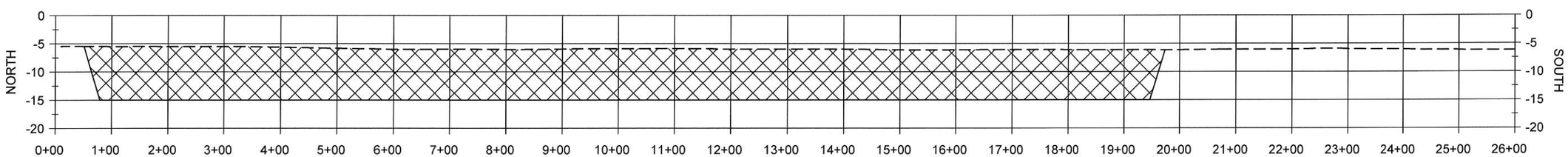

BA-4

HORIZONTAL GRAPHIC SCALE
200' 100' 0 200' 400'
20' 10' 0 20' 40'
VERTICAL GRAPHIC SCALE

STATE OF LOUISIANA
AMANDA M. TAYLOR
License No 41999
PROFESSIONAL ENGINEER
IN
CIVIL ENGINEERING
2/22/2018

STATE OF LOUISIANA
SHANNON McCLAIN HAYNES
License No. 30552
PROFESSIONAL ENGINEER
IN
CIVIL ENGINEERING

REV.	DATE	DESCRIPTION	BY

COASTAL PROTECTION AND RESTORATION AUTHORITY
150 TERRACE AVENUE
BATON ROUGE, LOUISIANA 70802

BORROW AREA SECTIONS

DESIGNED BY: AMANDA TAYLOR, P.E. - 0041999
APPROVED BY: SHANNON HAYNES, P.E. - 0030552

COLE'S BAYOU
MARSH RESTORATION PROJECT

STATE PROJECT NUMBER: TV-63
DRAWN BY: SHANE FAUST

DATE: FEB. 2018

SHEET 29 OF 50

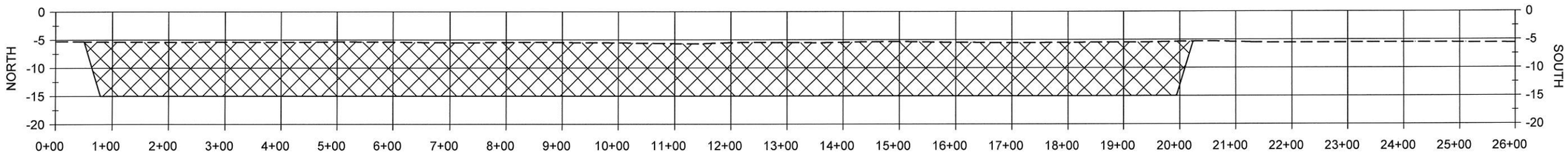

BA-5

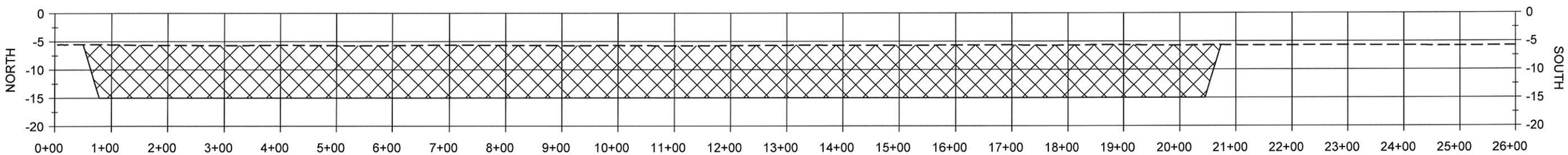

BA-6

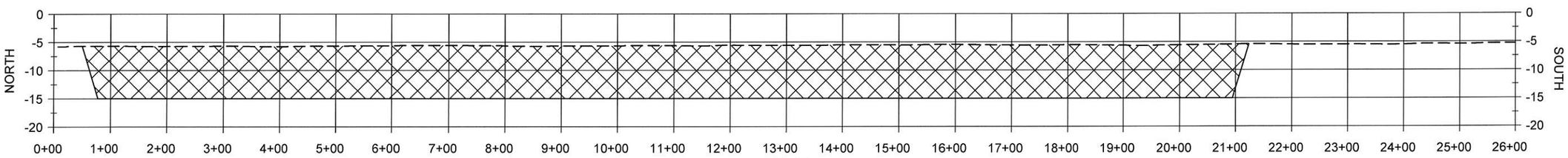

BA-7

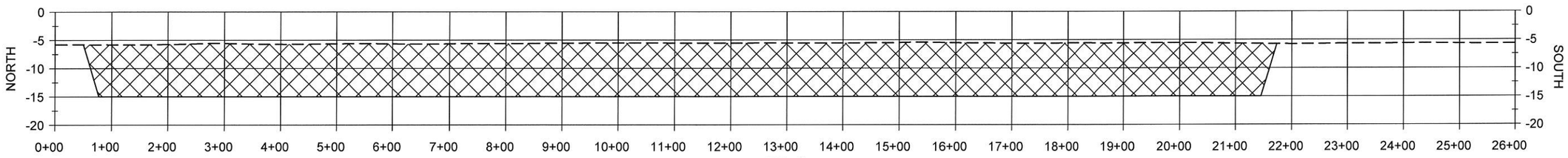

BA-8

HORIZONTAL GRAPHIC SCALE
200' 100' 0 200' 400'
20' 10' 0 20' 40'
VERTICAL GRAPHIC SCALE

STATE OF LOUISIANA
AMANDA M. TAYLOR
License No 41999
PROFESSIONAL ENGINEER
IN
CIVIL ENGINEERING
2/22/2018

STATE OF LOUISIANA
SHANNON McCLAIN HAYNES
License No. 30552
PROFESSIONAL ENGINEER
IN
CIVIL ENGINEERING
2/22/2018

REV.	DATE	DESCRIPTION	BY

COASTAL PROTECTION AND RESTORATION AUTHORITY
150 TERRACE AVENUE
BATON ROUGE, LOUISIANA 70802

BORROW AREA SECTIONS

DESIGNED BY: AMANDA TAYLOR, P.E. - 0041999
APPROVED BY: SHANNON HAYNES, P.E. - 0030552

COLE'S BAYOU
MARSH RESTORATION PROJECT

STATE PROJECT NUMBER: TV-63
DRAWN BY: SHANE FAUST

DATE: FEB. 2018

SHEET 30 OF 50

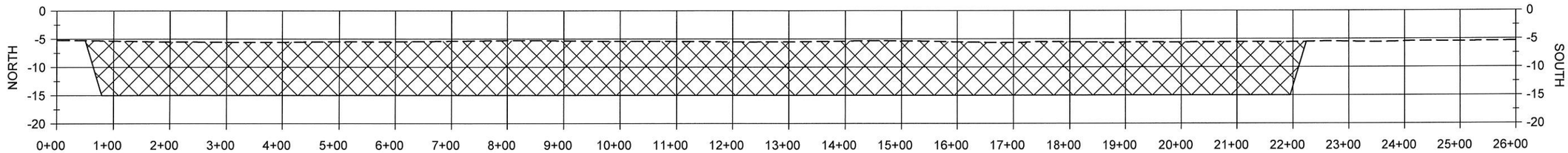

BA-9

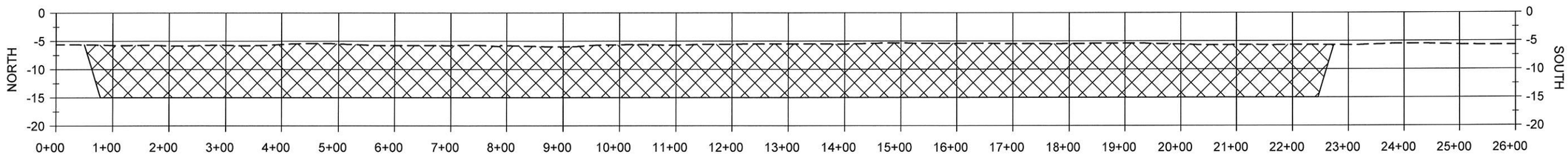

BA-10

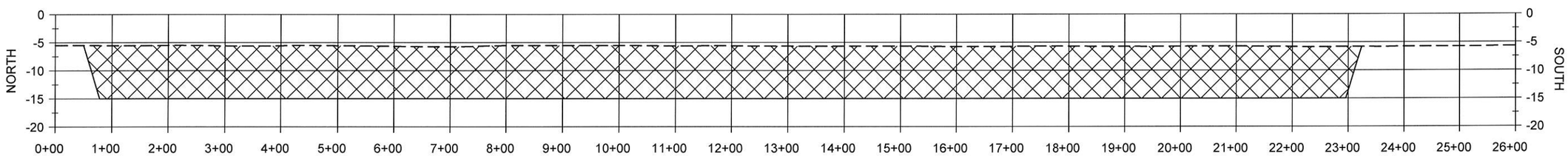

BA-11

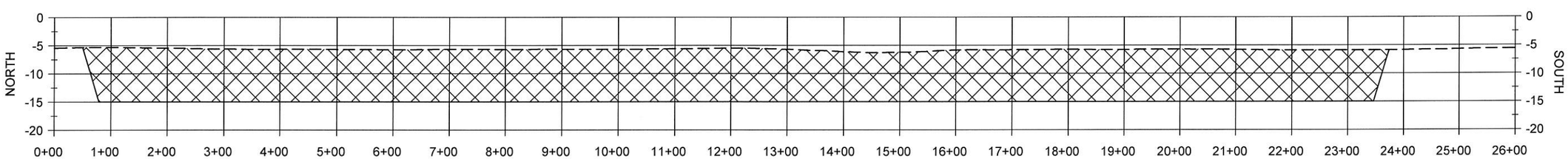

BA-12

HORIZONTAL GRAPHIC SCALE

200' 100' 0 200' 400'

20' 10' 0 20' 40'

VERTICAL GRAPHIC SCALE

STATE OF LOUISIANA
AMANDA M. TAYLOR
License No 41999
PROFESSIONAL ENGINEER
IN
CIVIL ENGINEERING
2/22/2018

STATE OF LOUISIANA
SHANNON McCLAIN HAYNES
License No. 30552
PROFESSIONAL ENGINEER
IN
CIVIL ENGINEERING
2/22/2018

REV.	DATE	DESCRIPTION	BY

COASTAL PROTECTION AND RESTORATION AUTHORITY
150 TERRACE AVENUE
BATON ROUGE, LOUISIANA 70802

BORROW AREA SECTIONS

DESIGNED BY: AMANDA TAYLOR, P.E. - 0041999

APPROVED BY: SHANNON HAYNES, P.E. - 0030552

COLE'S BAYOU
MARSH RESTORATION PROJECT

STATE PROJECT NUMBER: TV-63

DRAWN BY: SHANE FAUST

DATE: FEB. 2018

SHEET 31 OF 50

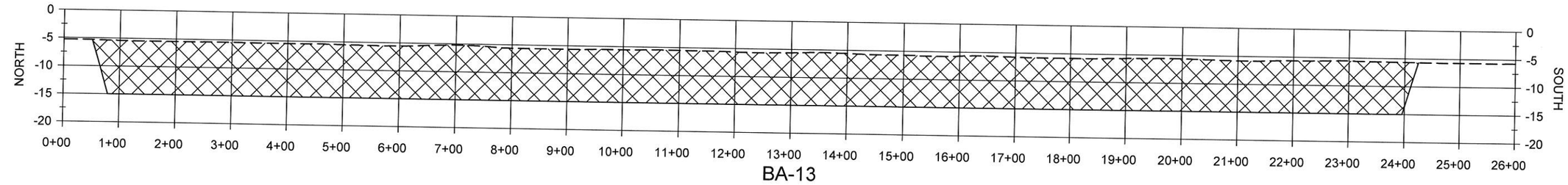

BA-13

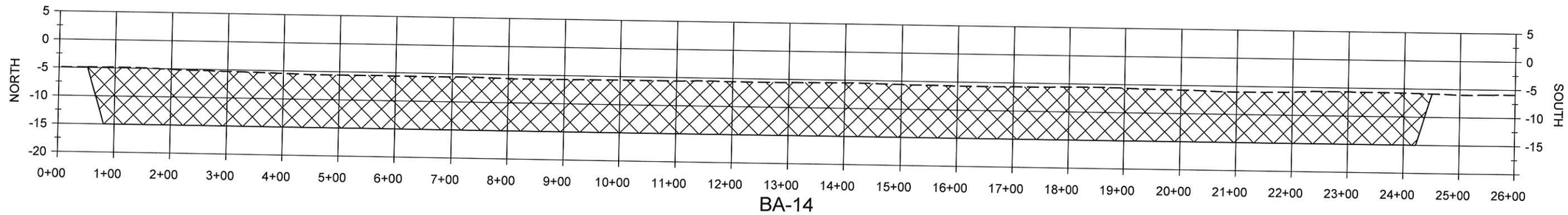

BA-14

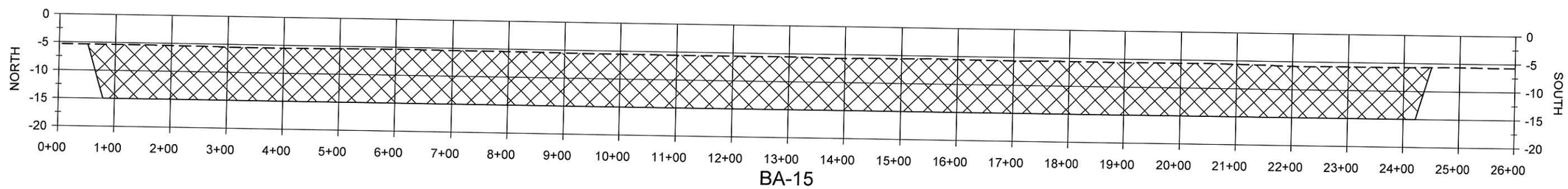

BA-15

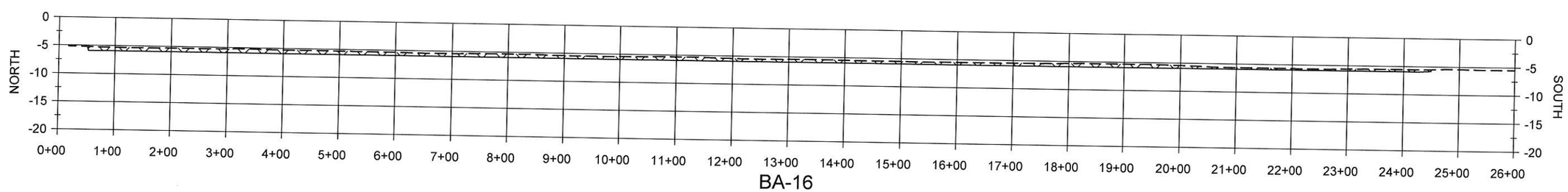

BA-16

HORIZONTAL GRAPHIC SCALE

200' 100' 0 200' 400'

20' 10' 0 20' 40'

VERTICAL GRAPHIC SCALE

STATE OF LOUISIANA
AMANDA M. TAYLOR
License No. 41999
PROFESSIONAL ENGINEER
IN
CIVIL ENGINEERING
2/22/2018

STATE OF LOUISIANA
SHANNON McCLAIN HAYNES
License No. 30552
PROFESSIONAL ENGINEER
IN
CIVIL ENGINEERING
2/22/2018

REV.	DATE	DESCRIPTION	BY

COASTAL PROTECTION AND RESTORATION AUTHORITY
150 TERRACE AVENUE
BATON ROUGE, LOUISIANA 70802

BORROW AREA SECTIONS

DESIGNED BY: AMANDA TAYLOR, P.E. - 0041999

APPROVED BY: SHANNON HAYNES, P.E. - 0030552

COLE'S BAYOU
MARSH RESTORATION PROJECT

STATE PROJECT NUMBER: TV-63

DRAWN BY: SHANE FAUST

DATE: FEB. 2018

SHEET 32 OF 50

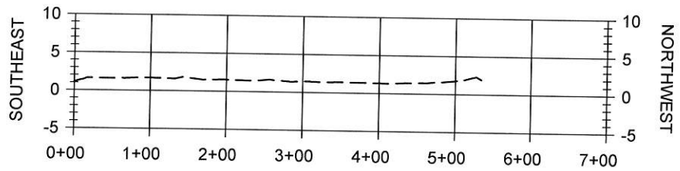

MC1-1

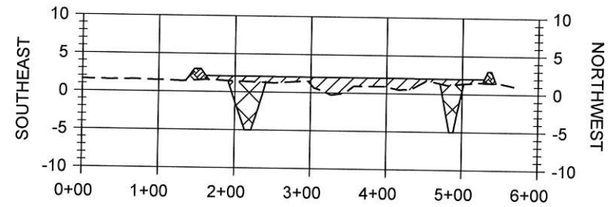

MC1-2

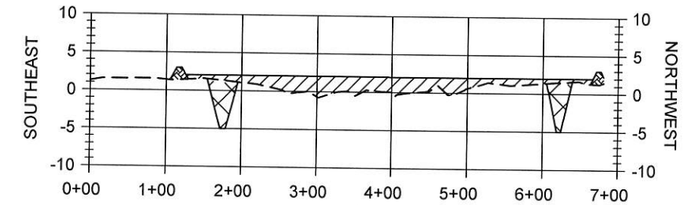

MC1-3

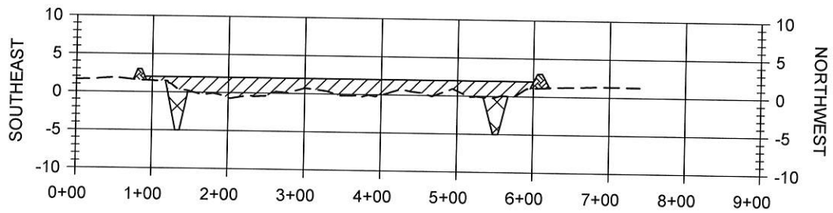

MC1-4

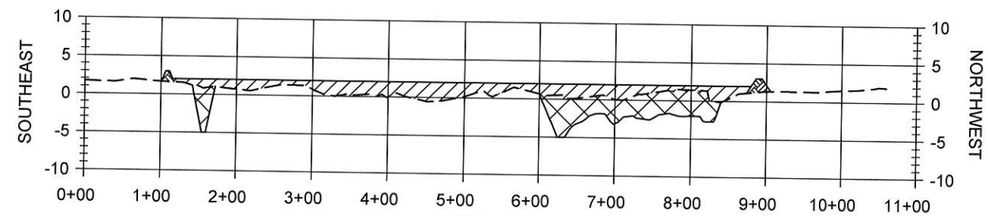

MC1-5

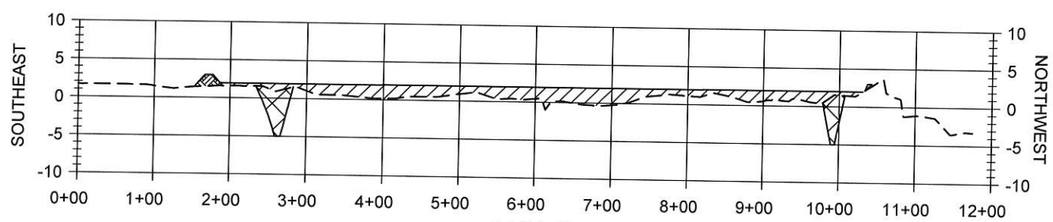

MC1-6

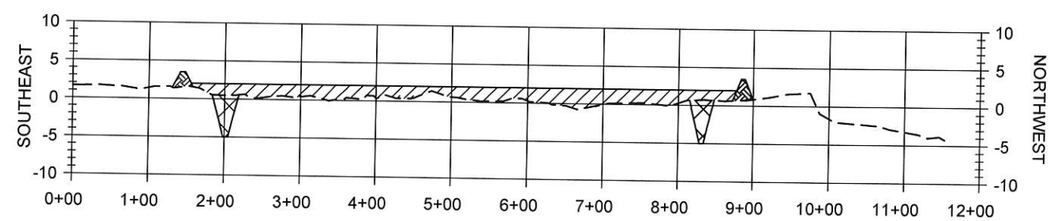

MC1-7

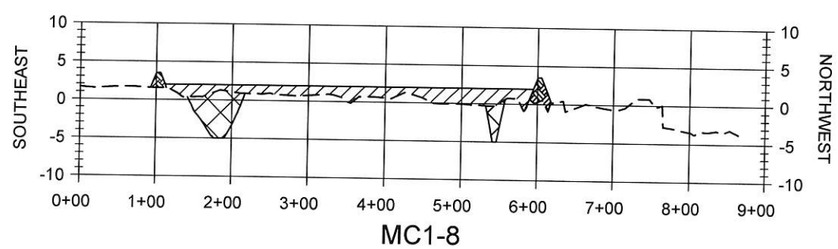

MC1-8

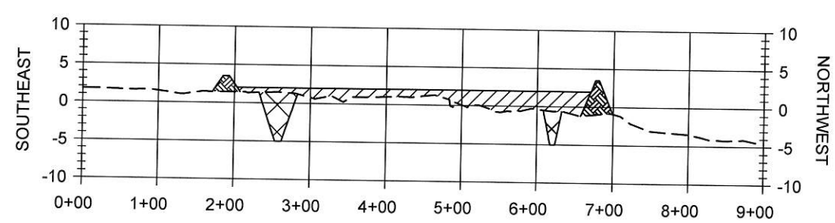

MC1-9

HORIZONTAL GRAPHIC SCALE

200' 100' 0 200' 400'

20' 10' 0 20' 40'

VERTICAL GRAPHIC SCALE

STATE OF LOUISIANA
AMANDA M. TAYLOR
License No 41999
PROFESSIONAL ENGINEER
IN
CIVIL ENGINEERING
4/12/2018

STATE OF LOUISIANA
SHANNON McCLAIN HAYNES
License No. 30552
PROFESSIONAL ENGINEER
IN
CIVIL ENGINEERING
4/12/2018

REV.	DATE	DESCRIPTION	BY

COASTAL PROTECTION AND RESTORATION AUTHORITY
150 TERRACE AVENUE
BATON ROUGE, LOUISIANA 70802

MARSH CREATION AREA 1 SECTIONS

DESIGNED BY: AMANDA TAYLOR, P.E. - 0041999

APPROVED BY: SHANNON HAYNES, P.E. - 0030552

COLE'S BAYOU MARSH RESTORATION PROJECT

STATE PROJECT NUMBER: TV-63

DRAWN BY: SHANE FAUST

DATE: FEB. 2018

SHEET 33 OF 50

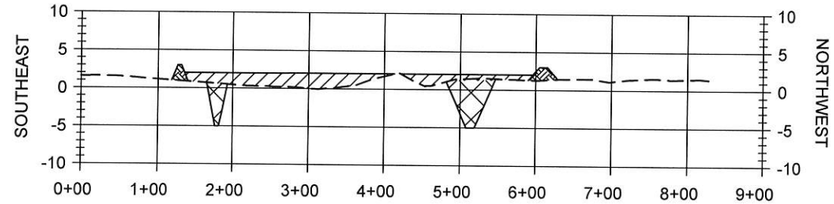

MC2-1

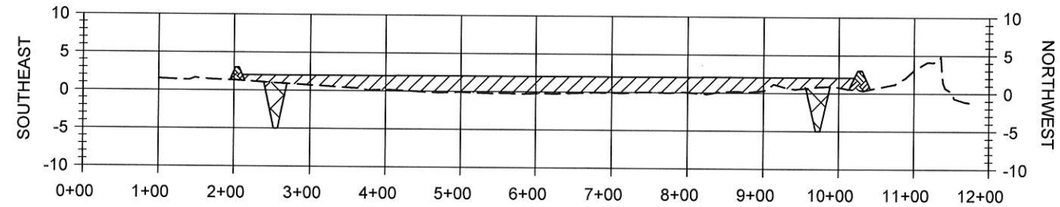

MC2-2

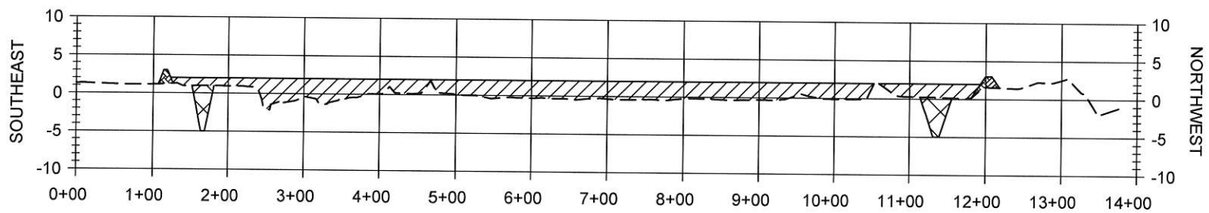

MC2-3

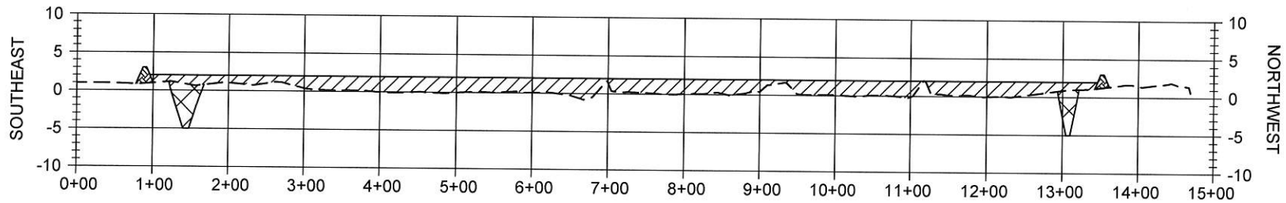

MC2-4

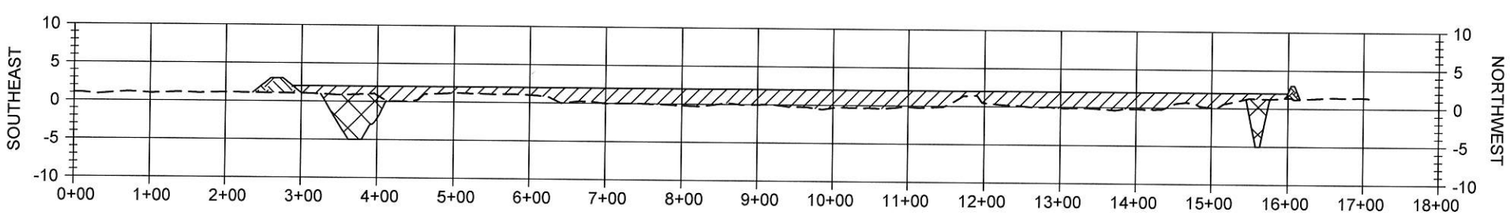

MC2-5

HORIZONTAL GRAPHIC SCALE

200' 100' 0 200' 400'

20' 10' 0 20' 40'

VERTICAL GRAPHIC SCALE

STATE OF LOUISIANA
AMANDA M. TAYLOR
License No 41999
PROFESSIONAL ENGINEER
IN
CIVIL ENGINEERING
2/22/2018

STATE OF LOUISIANA
SHANNON McCLAIN HAYNES
License No. 30552
PROFESSIONAL ENGINEER
IN
CIVIL ENGINEERING
2/22/2018

REV.	DATE	DESCRIPTION	BY

COASTAL PROTECTION AND RESTORATION AUTHORITY
150 TERRACE AVENUE
BATON ROUGE, LOUISIANA 70802

MARSH CREATION
AREA 2 SECTIONS

DESIGNED BY: AMANDA TAYLOR, P.E. - 0041999

APPROVED BY: SHANNON HAYNES, P.E. - 0030552

COLE'S BAYOU
MARSH RESTORATION PROJECT

STATE PROJECT NUMBER: TV-63

DRAWN BY: SHANE FAUST

DATE: FEB. 2018

SHEET 34 OF 50

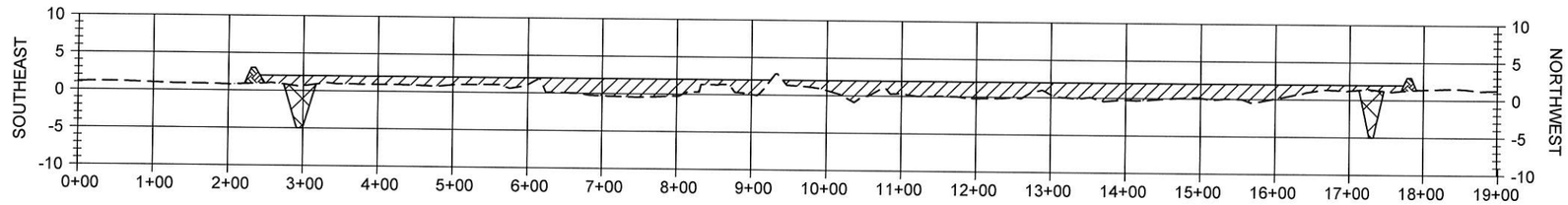

MC2-6

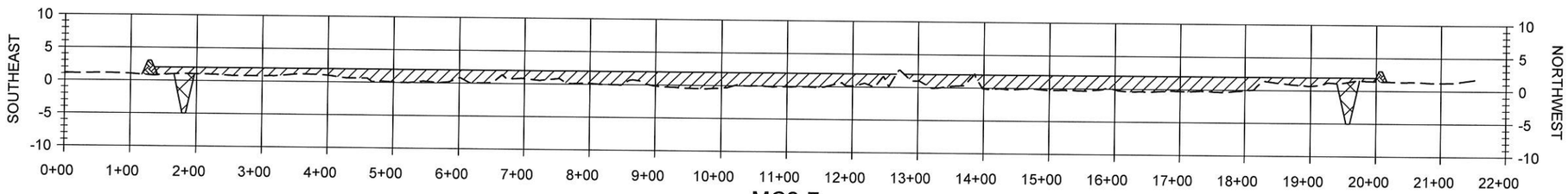

MC2-7

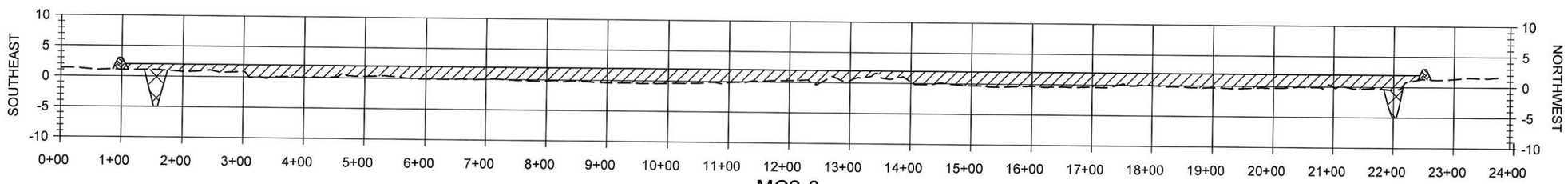

MC2-8

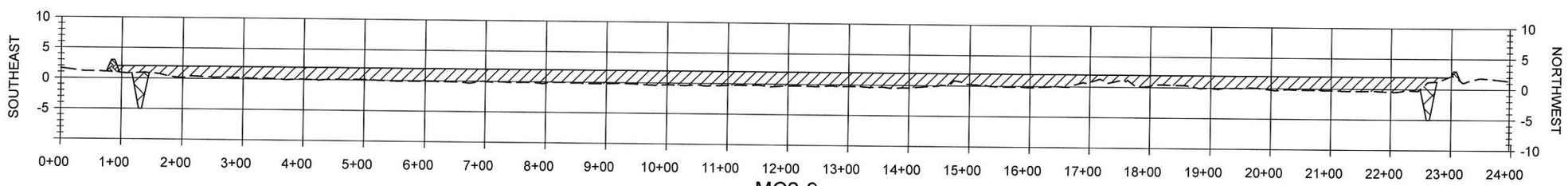

MC2-9

HORIZONTAL GRAPHIC SCALE

200' 100' 0 200' 400'

20' 10' 0 20' 40'

VERTICAL GRAPHIC SCALE

STATE OF LOUISIANA
AMANDA M. TAYLOR
License No. 41999
PROFESSIONAL ENGINEER
IN
CIVIL ENGINEERING
2/27/2018

STATE OF LOUISIANA
SHANNON McCLAIN HAYNES
License No. 30552
PROFESSIONAL ENGINEER
IN
ENGINEERING
2/27/2018

REV.	DATE	DESCRIPTION	BY

COASTAL PROTECTION AND RESTORATION AUTHORITY
150 TERRACE AVENUE
BATON ROUGE, LOUISIANA 70802

MARSH CREATION
AREA 2 SECTIONS

DESIGNED BY: AMANDA TAYLOR, P.E. - 0041999

APPROVED BY: SHANNON HAYNES, P.E. - 0030552

COLE'S BAYOU
MARSH RESTORATION PROJECT

STATE PROJECT NUMBER: TV-63

DRAWN BY: SHANE FAUST

DATE: FEB. 2018

SHEET 35 OF 50

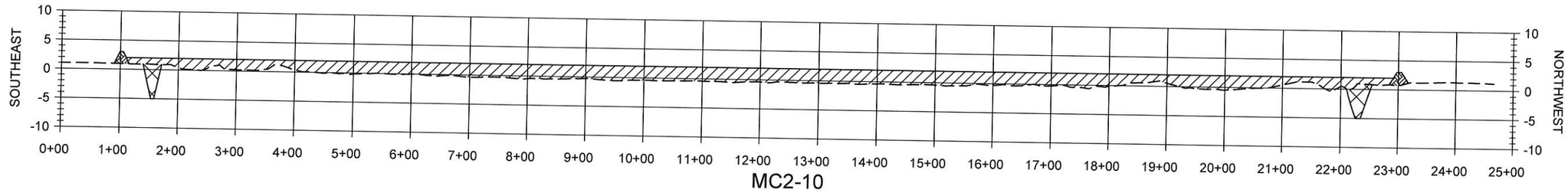

MC2-10

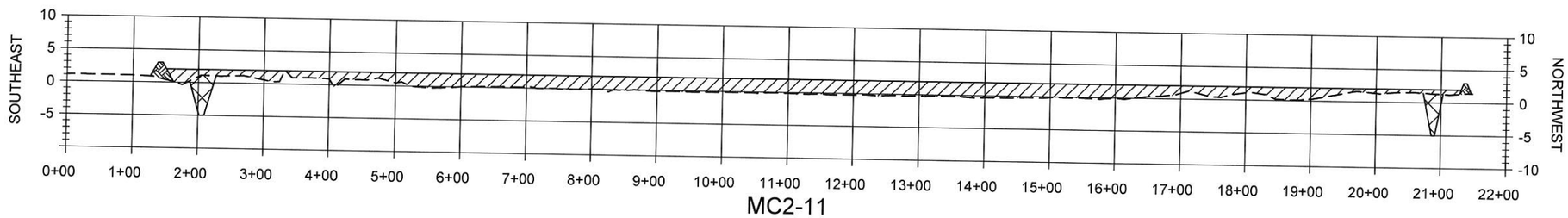

MC2-11

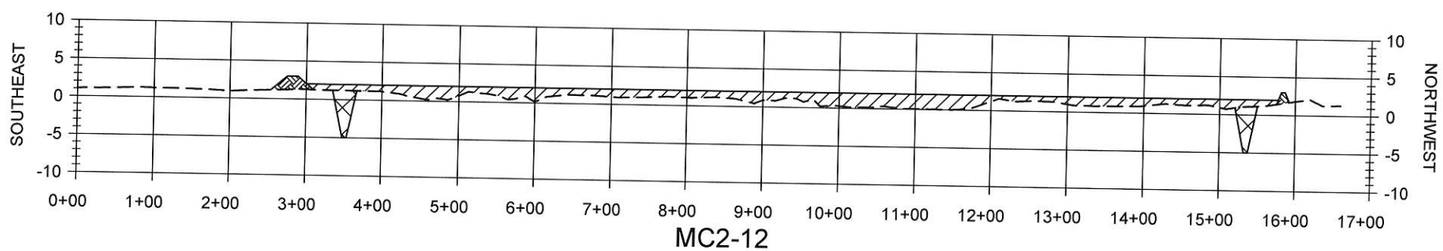

MC2-12

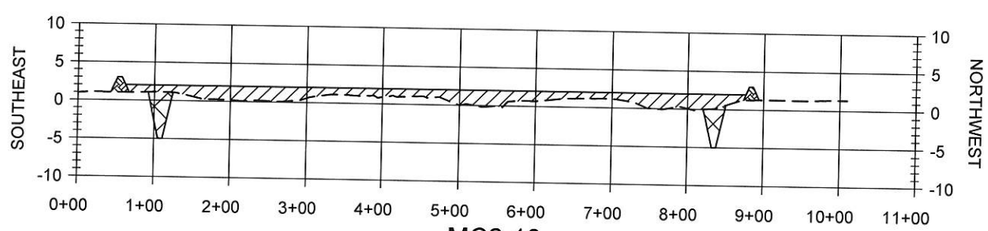

MC2-13

HORIZONTAL GRAPHIC SCALE
200' 100' 0 200' 400'
20' 10' 0 20' 40'
VERTICAL GRAPHIC SCALE

STATE OF LOUISIANA
AMANDA M. TAYLOR
License No. 41999
PROFESSIONAL ENGINEER
IN
CIVIL ENGINEERING
2/22/2018

STATE OF LOUISIANA
SHANNON McCLAIN HAYNES
License No. 30552
PROFESSIONAL ENGINEER
IN
CIVIL ENGINEERING
2/22/2018

REV.	DATE	DESCRIPTION	BY

COASTAL PROTECTION AND RESTORATION AUTHORITY
150 TERRACE AVENUE
BATON ROUGE, LOUISIANA 70802

MARSH CREATION
AREA 2 SECTIONS

DESIGNED BY: AMANDA TAYLOR, P.E. - 0041999
APPROVED BY: SHANNON HAYNES, P.E. - 0030552

COLE'S BAYOU
MARSH RESTORATION PROJECT

STATE PROJECT NUMBER: TV-63
DRAWN BY: SHANE FAUST

DATE: FEB. 2018

SHEET 36 OF 50

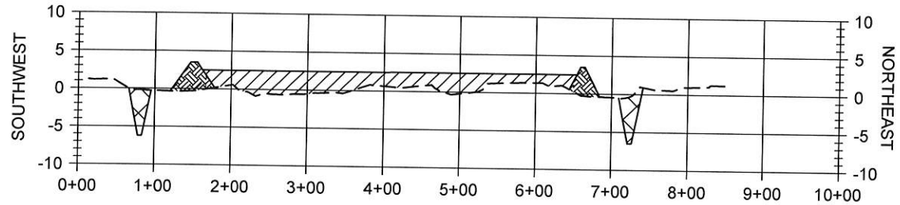

MC3-1

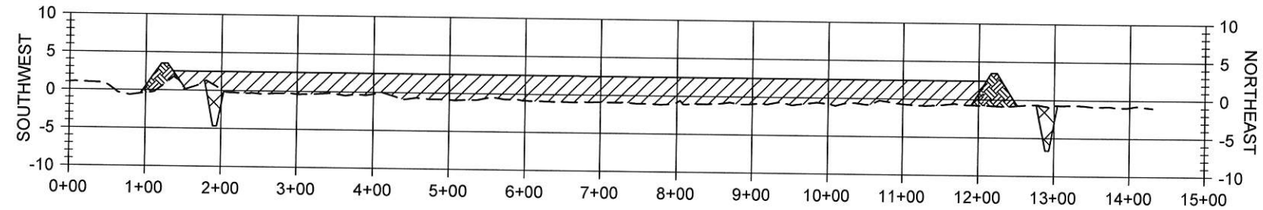

MC3-2

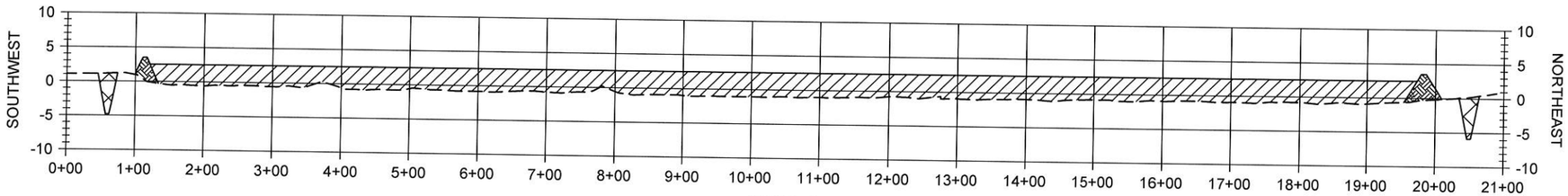

MC3-3

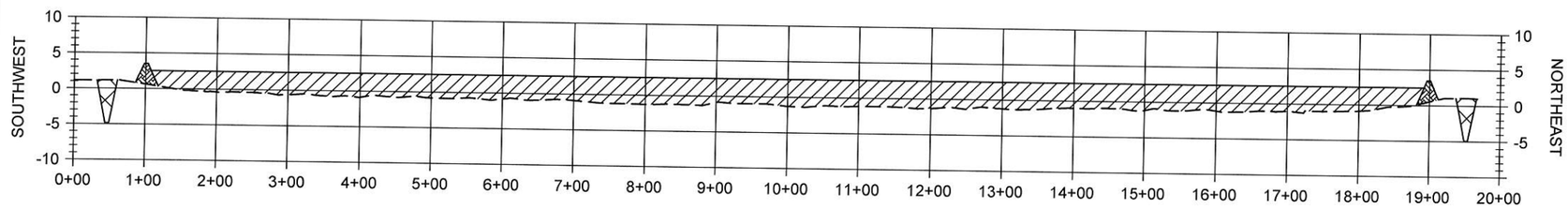

MC3-4

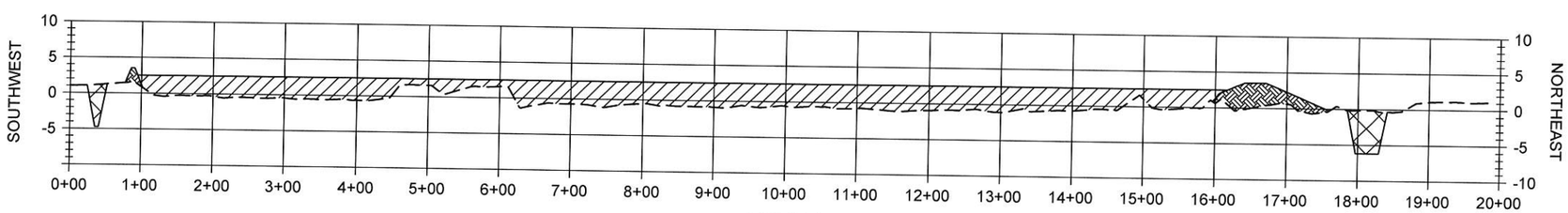

MC3-5

HORIZONTAL GRAPHIC SCALE

200' 100' 0 200' 400'

20' 10' 0 20' 40'

VERTICAL GRAPHIC SCALE

STATE OF LOUISIANA
AMANDA M. TAYLOR
License No. 41999
PROFESSIONAL ENGINEER
IN
CIVIL ENGINEERING
2/22/2018

STATE OF LOUISIANA
SHANNON McCLAIN HAYNES
License No. 30552
PROFESSIONAL ENGINEER
IN
CIVIL ENGINEERING

REV.	DATE	DESCRIPTION	BY

COASTAL PROTECTION AND RESTORATION AUTHORITY
1150 TERRACE AVENUE
BATON ROUGE, LOUISIANA 70802

MARSH CREATION AREA 3 SECTIONS

DESIGNED BY: AMANDA TAYLOR, P.E. - 0041999

APPROVED BY: SHANNON HAYNES, P.E. - 0030552

COLE'S BAYOU MARSH RESTORATION PROJECT

STATE PROJECT NUMBER: TV-63

DRAWN BY: SHANE FAUST

DATE: FEB. 2018

SHEET 37 OF 50

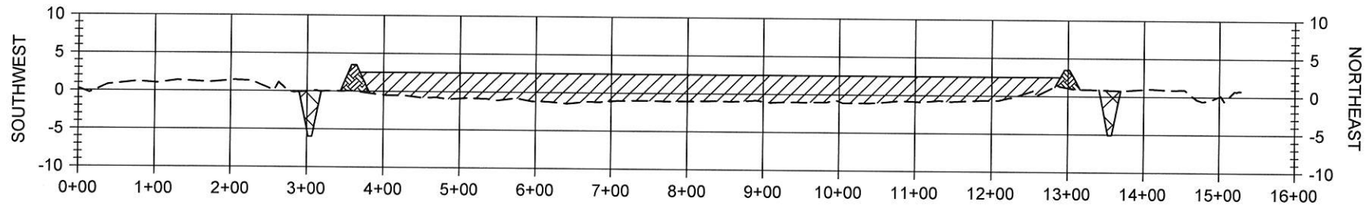

MC3-6

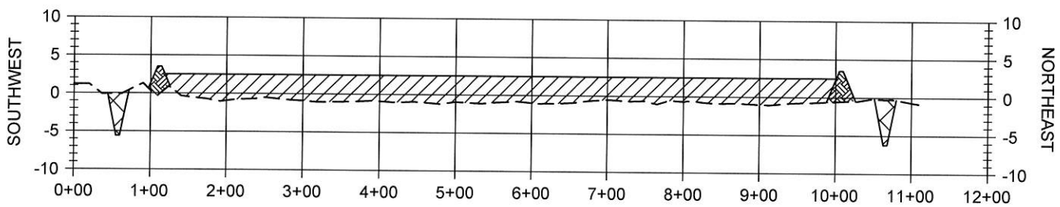

MC3-7

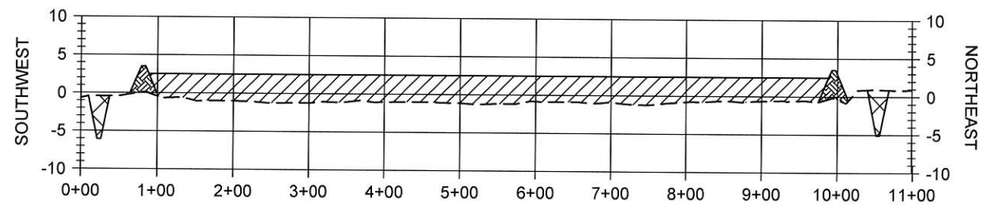

MC3-8

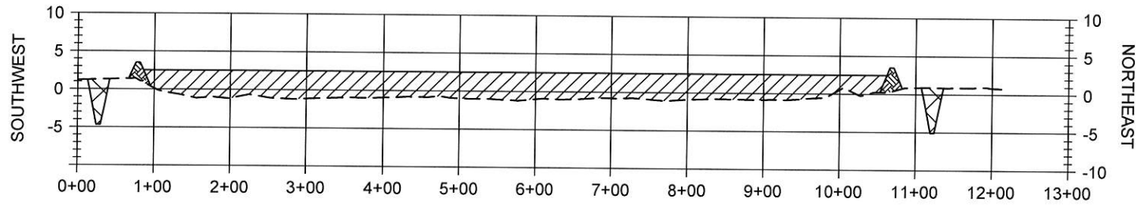

MC3-9

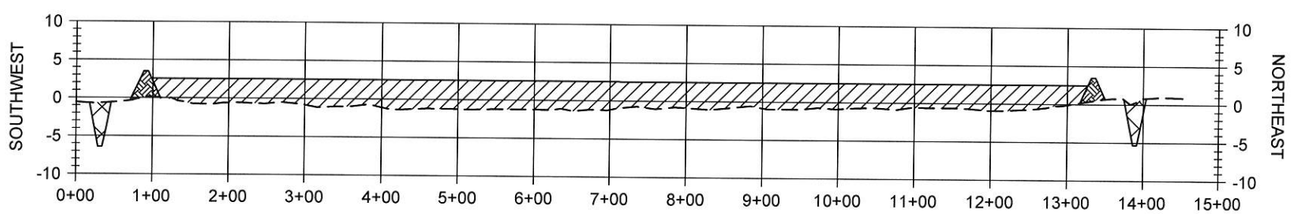

MC3-10

HORIZONTAL GRAPHIC SCALE

200' 100' 0 200' 400'

20' 10' 0 20' 40'

VERTICAL GRAPHIC SCALE

STATE OF LOUISIANA
AMANDA M. TAYLOR
License No. 41999
PROFESSIONAL ENGINEER
IN
CIVIL ENGINEERING
2/22/2018

STATE OF LOUISIANA
SHANNON McCLAIN HAYNES
License No. 30552
PROFESSIONAL ENGINEER
IN
CIVIL ENGINEERING
2/22/2018

REV.	DATE	DESCRIPTION	BY

COASTAL PROTECTION AND RESTORATION AUTHORITY
150 TERRACE AVENUE
BATON ROUGE, LOUISIANA 70802

MARSH CREATION AREA 3 SECTIONS

DESIGNED BY: AMANDA TAYLOR, P.E. - 0041999

APPROVED BY: SHANNON HAYNES, P.E. - 0030552

COLE'S BAYOU MARSH RESTORATION PROJECT

STATE PROJECT NUMBER: TV-63

DRAWN BY: SHANE FAUST

DATE: FEB. 2018

SHEET 38 OF 50

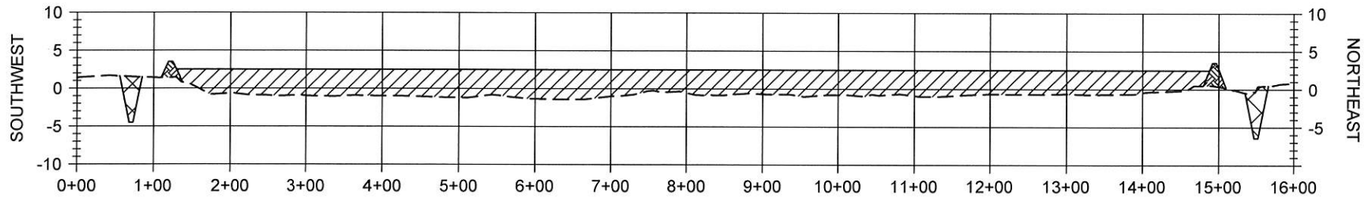

MC3-11

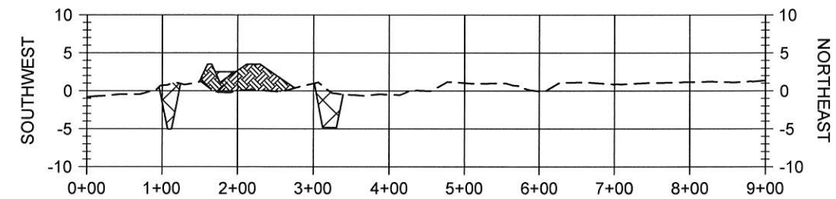

MC3-12

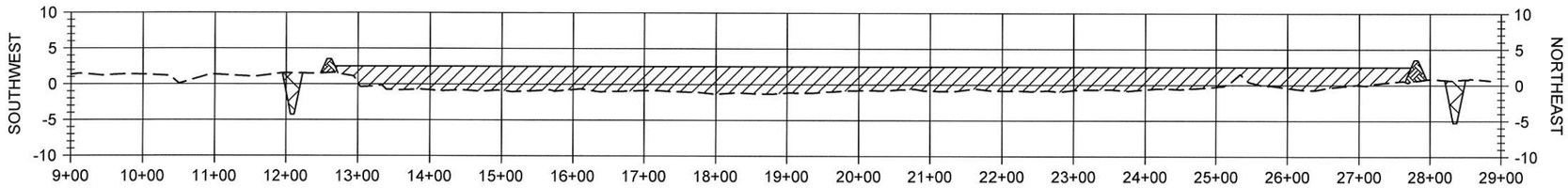

MC3-12 CONTINUED

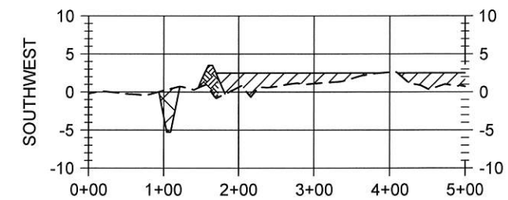

MC3-13

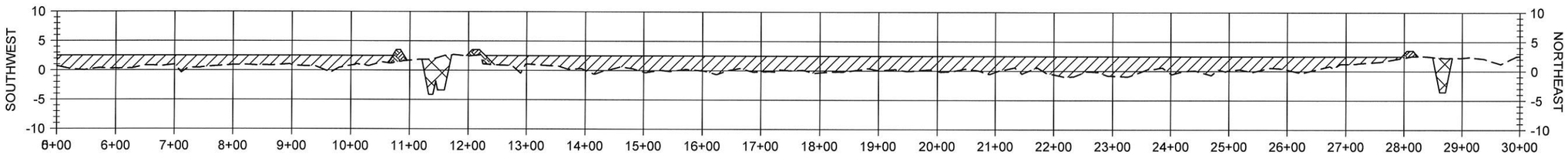

MC3-13 CONTINUED

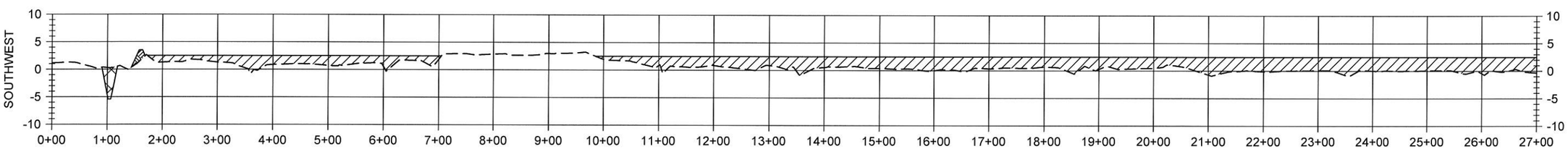

MC3-14

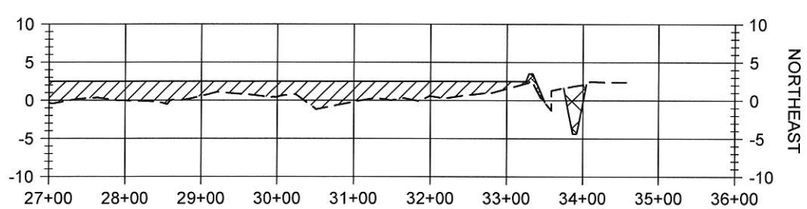

MC3-14 CONTINUED

HORIZONTAL GRAPHIC SCALE

200' 100' 0 200' 400'

20' 10' 0 20' 40'

VERTICAL GRAPHIC SCALE

STATE OF LOUISIANA
AMANDA M. TAYLOR
License No 41999
PROFESSIONAL ENGINEER
IN
CIVIL ENGINEERING
2/22/2018

STATE OF LOUISIANA
SHANNON McCLAIN HAYNES
License No. 30552
PROFESSIONAL ENGINEER
IN
CIVIL ENGINEERING
2/22/2018

REV.	DATE	DESCRIPTION	BY

COASTAL PROTECTION AND RESTORATION AUTHORITY
150 TERRACE AVENUE
BATON ROUGE, LOUISIANA 70802

MARSH CREATION
AREA 3 SECTIONS

DESIGNED BY: AMANDA TAYLOR, P.E. - 0041999

APPROVED BY: SHANNON HAYNES, P.E. - 0030552

COLE'S BAYOU
MARSH RESTORATION PROJECT

STATE PROJECT NUMBER: TV-63

DRAWN BY: SHANE FAUST

DATE: FEB. 2018

SHEET 39 OF 50

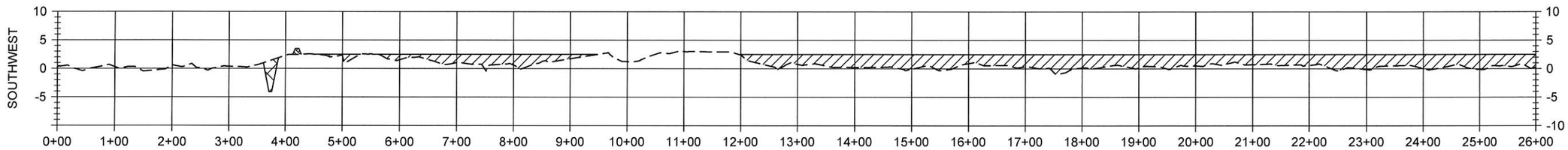

MC3-15

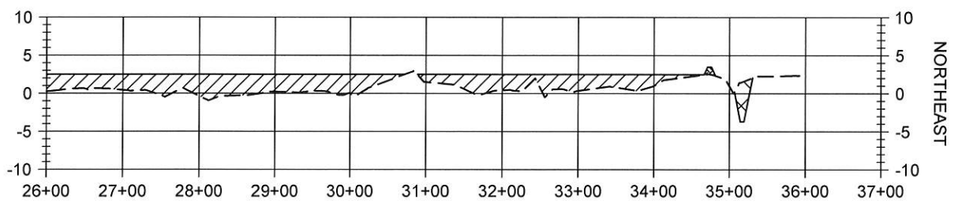

MC3-15 CONTINUED

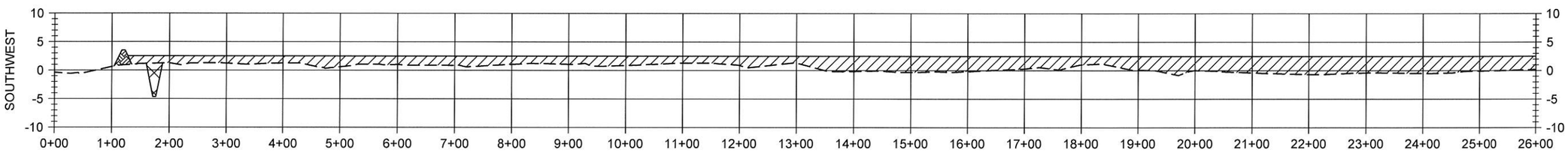

MC3-16

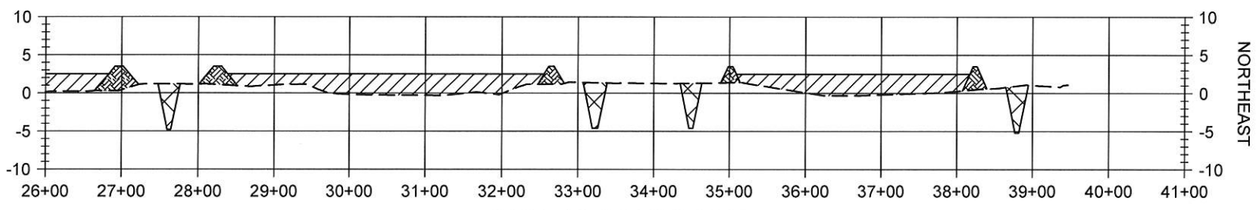

MC3-16 CONTINUED

HORIZONTAL GRAPHIC SCALE

200' 100' 0 200' 400'

20' 10' 0 20' 40'

VERTICAL GRAPHIC SCALE

STATE OF LOUISIANA
AMANDA M. TAYLOR
License No. 41999
PROFESSIONAL ENGINEER
IN
CIVIL ENGINEERING
2/22/2018

STATE OF LOUISIANA
SHANNON McCLAIN HAYNES
License No. 30552
PROFESSIONAL ENGINEER
IN
ENGINEERING

REV.	DATE	DESCRIPTION	BY

COASTAL PROTECTION AND RESTORATION AUTHORITY
150 TERRACE AVENUE
BATON ROUGE, LOUISIANA 70802

MARSH CREATION
AREA 3 SECTIONS

DESIGNED BY: AMANDA TAYLOR, P.E. - 0041999

APPROVED BY: SHANNON HAYNES, P.E. - 0030552

COLE'S BAYOU
MARSH RESTORATION PROJECT

STATE PROJECT NUMBER: TV-63

DRAWN BY: SHANE FAUST

DATE: FEB. 2018

SHEET 40 OF 50

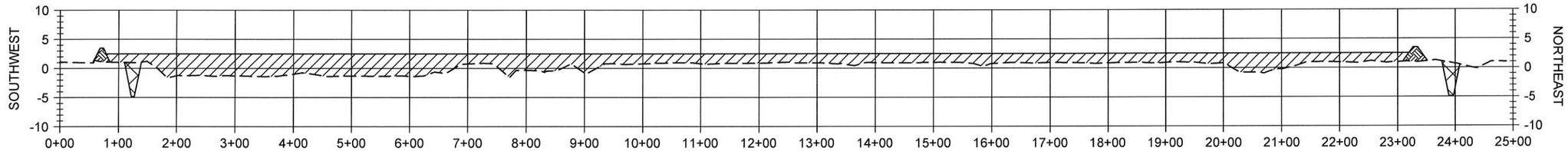

MC3-17

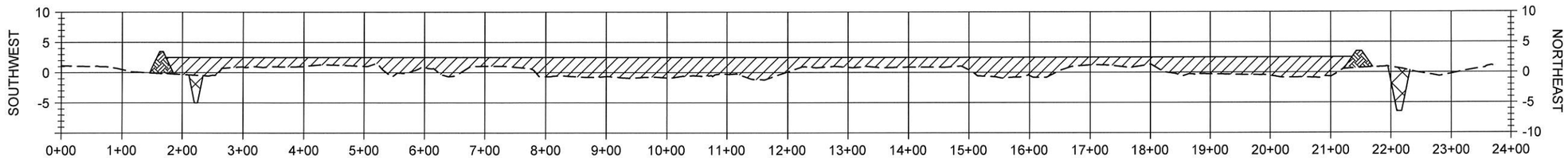

MC3-18

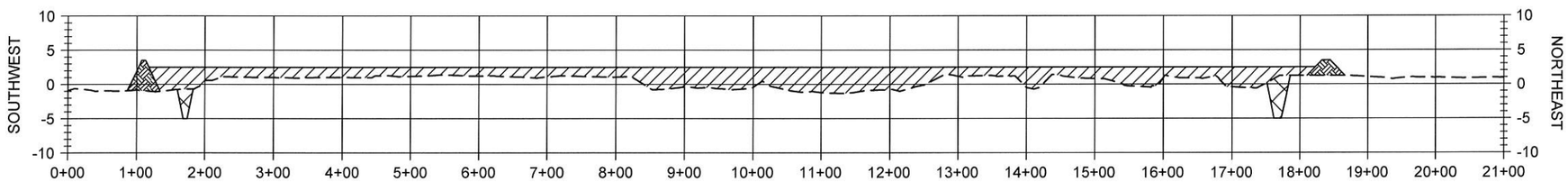

MC3-19

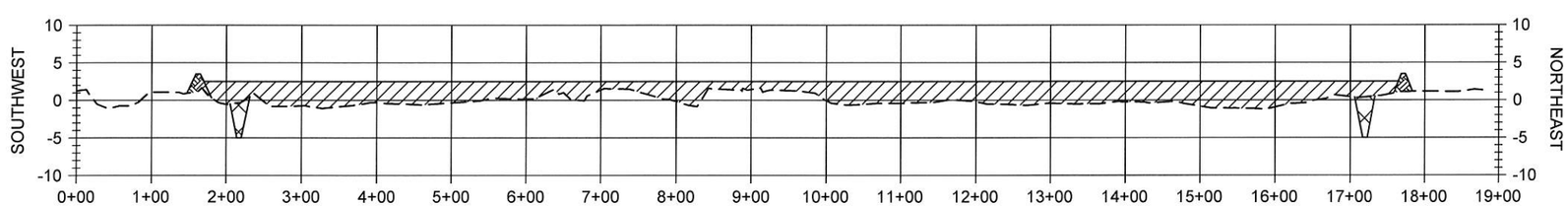

MC3-20

HORIZONTAL GRAPHIC SCALE

200' 100' 0 200' 400'

20' 10' 0 20' 40'

VERTICAL GRAPHIC SCALE

STATE OF LOUISIANA
AMANDA M. TAYLOR
License No. 41999
PROFESSIONAL ENGINEER
IN
CIVIL ENGINEERING
2/22/2018

STATE OF LOUISIANA
SHANNON McCLAIN HAYNES
License No. 30552
PROFESSIONAL ENGINEER
IN
CIVIL ENGINEERING

REV.	DATE	DESCRIPTION	BY

COASTAL PROTECTION AND RESTORATION AUTHORITY
150 TERRACE AVENUE
BATON ROUGE, LOUISIANA 70802

MARSH CREATION AREA 3 SECTIONS

DESIGNED BY: AMANDA TAYLOR, P.E. - 0041999

APPROVED BY: SHANNON HAYNES, P.E. - 0030552

COLE'S BAYOU MARSH RESTORATION PROJECT

STATE PROJECT NUMBER: TV-63

DRAWN BY: SHANE FAUST

DATE: FEB. 2018

SHEET 41 OF 50

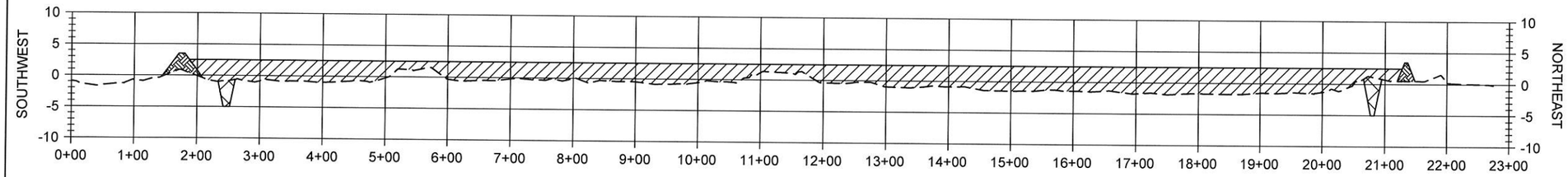

MC3-21

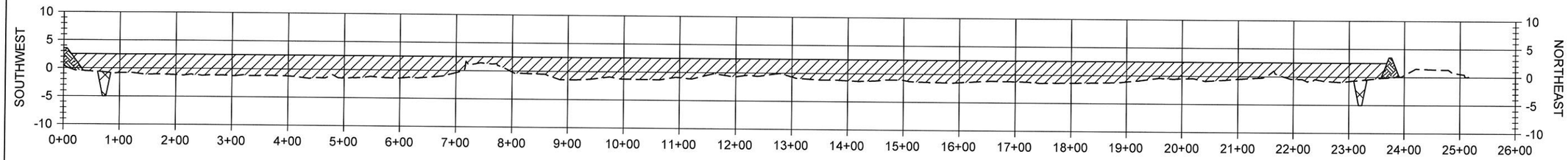

MC3-22

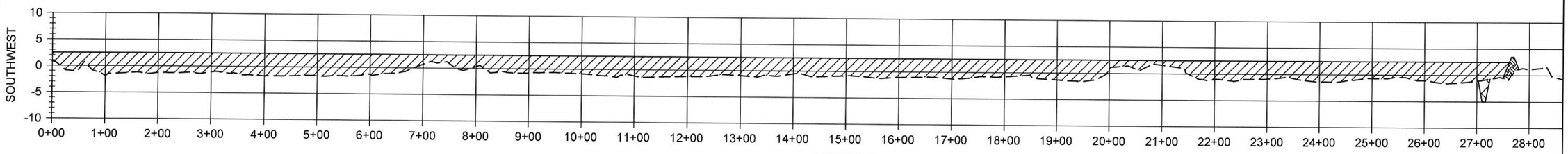

MC3-23

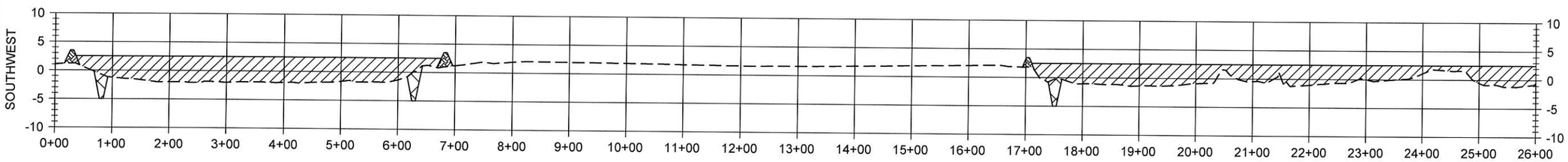

MC3-24

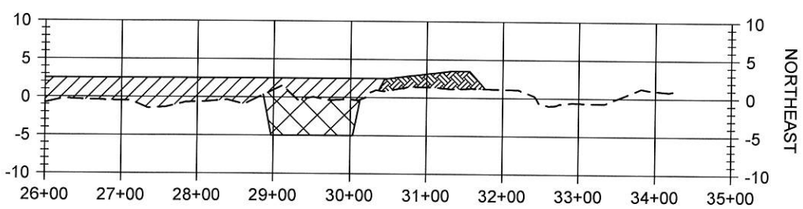

MC3-24 CONTINUED

HORIZONTAL GRAPHIC SCALE

200' 100' 0 200' 400'

20' 10' 0 20' 40'

VERTICAL GRAPHIC SCALE

STATE OF LOUISIANA
AMANDA M. TAYLOR
License No. 41999
PROFESSIONAL ENGINEER
IN
CIVIL ENGINEERING
2/22/2018

STATE OF LOUISIANA
SHANNON McCLAIN HAYNES
License No. 30552
PROFESSIONAL ENGINEER
IN
CIVIL ENGINEERING

REV.	DATE	DESCRIPTION	BY

COASTAL PROTECTION AND RESTORATION AUTHORITY
150 TERRACE AVENUE
BATON ROUGE, LOUISIANA 70802

MARSH CREATION AREA 3 SECTIONS

DESIGNED BY: AMANDA TAYLOR, P.E. - 0041999

APPROVED BY: SHANNON HAYNES, P.E. - 0030552

COLE'S BAYOU MARSH RESTORATION PROJECT

STATE PROJECT NUMBER: TV-63

DRAWN BY: SHANE FAUST

DATE: FEB. 2018

SHEET 42 OF 50

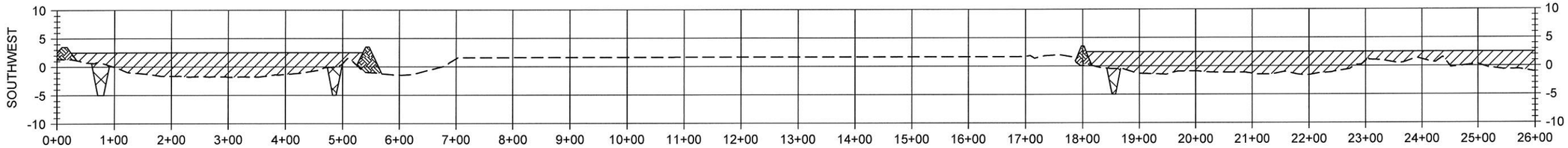

MC3-25

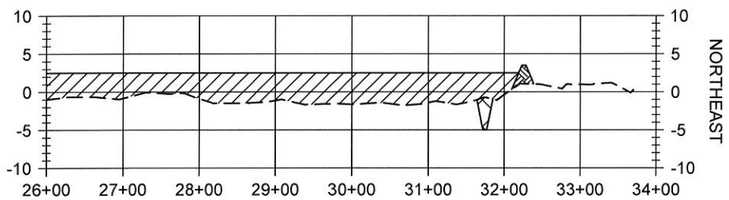

MC3-25 CONTINUED

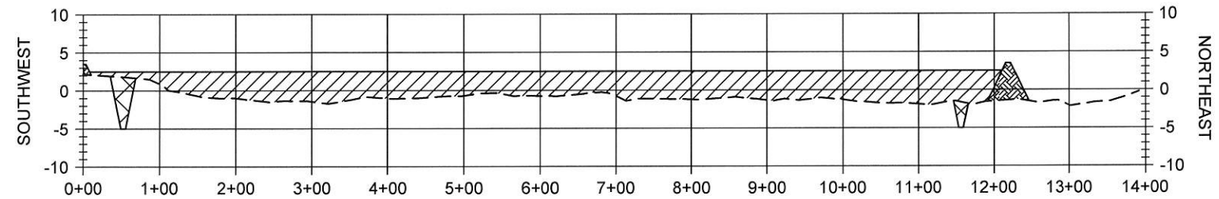

MC3-26

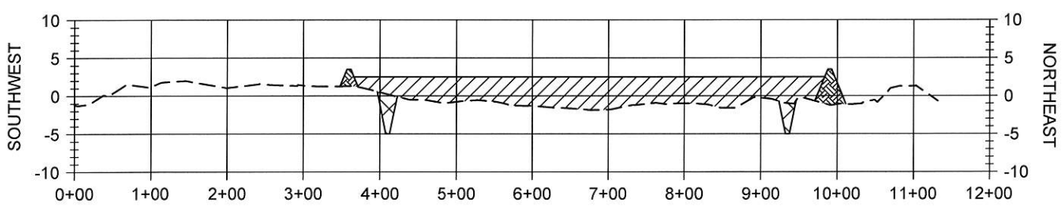

MC3-27

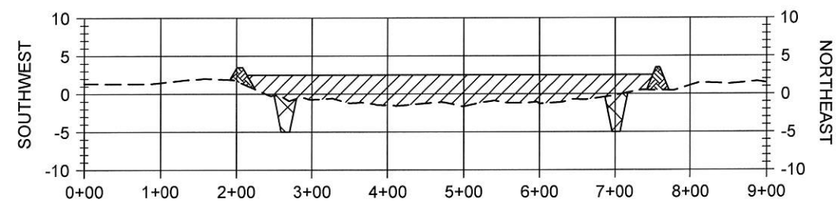

MC3-28

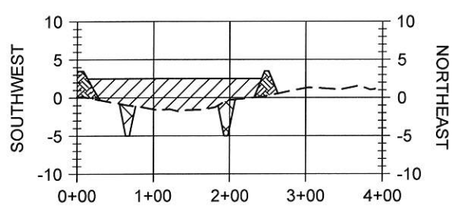

MC3-29

HORIZONTAL GRAPHIC SCALE

200' 100' 0 200' 400'

20' 10' 0 20' 40'

VERTICAL GRAPHIC SCALE

STATE OF LOUISIANA
AMANDA M. TAYLOR
License No. 41999
PROFESSIONAL ENGINEER
IN
CIVIL ENGINEERING
2/22/2018

STATE OF LOUISIANA
SHANNON McCLAIN HAYNES
License No. 30552
PROFESSIONAL ENGINEER
IN
CIVIL ENGINEERING

REV.	DATE	DESCRIPTION	BY

COASTAL PROTECTION AND RESTORATION AUTHORITY
150 TERRACE AVENUE
BATON ROUGE, LOUISIANA 70802

MARSH CREATION AREA 3 SECTIONS

DESIGNED BY: AMANDA TAYLOR, P.E. - 0041999

APPROVED BY: SHANNON HAYNES, P.E. - 0030552

COLE'S BAYOU MARSH RESTORATION PROJECT

STATE PROJECT NUMBER: TV-63

DRAWN BY: SHANE FAUST

DATE: FEB. 2018

SHEET 43 OF 50

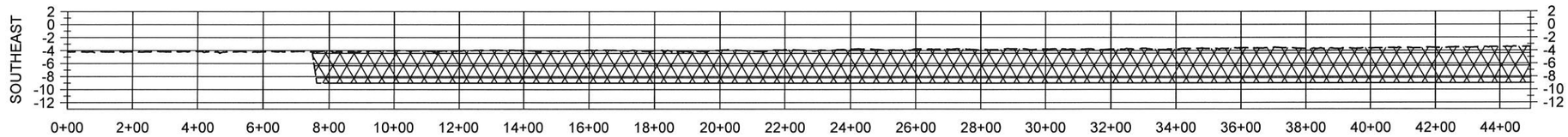

EAC1

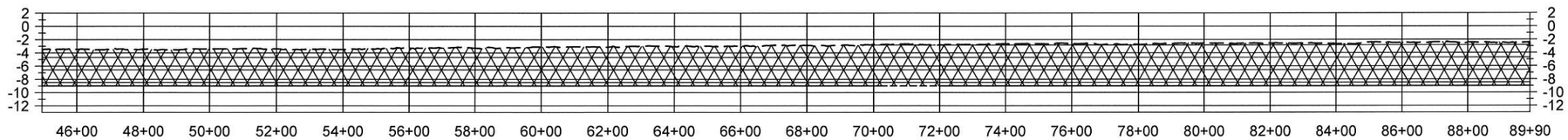

EAC1 CONTINUED

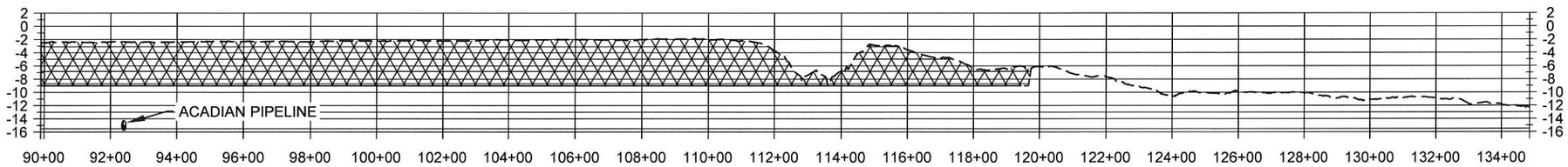

EAC1 CONTINUED

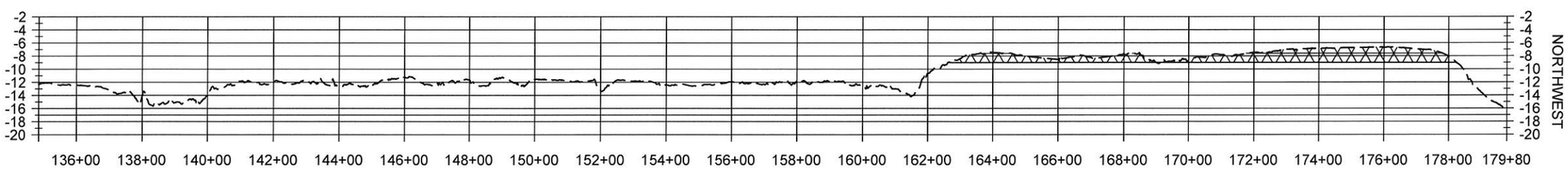

EAC1 CONTINUED

HORIZONTAL GRAPHIC SCALE

400' 200' 0 400' 800'

40' 20' 0 40' 80'

VERTICAL GRAPHIC SCALE

STATE OF LOUISIANA
AMANDA M. TAYLOR
License No. 41999
PROFESSIONAL ENGINEER
IN
CIVIL ENGINEERING
2/22/2018

STATE OF LOUISIANA
SHANNON McCLAIN HAYNES
License No. 30552
PROFESSIONAL ENGINEER
IN
CIVIL ENGINEERING
2/22/2018

REV.	DATE	DESCRIPTION	BY

COASTAL PROTECTION AND RESTORATION AUTHORITY
150 TERRACE AVENUE
BATON ROUGE, LOUISIANA 70802

EQUIPMENT ACCESS SECTIONS

DESIGNED BY: AMANDA TAYLOR, P.E. - 0041999

APPROVED BY: SHANNON HAYNES, P.E. - 0030552

COLE'S BAYOU
MARSH RESTORATION PROJECT

STATE PROJECT NUMBER: TV-63

DRAWN BY: SHANE FAUST

DATE: FEB. 2018

SHEET 44 OF 50

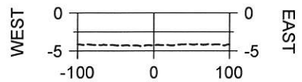

EAC1 5+83

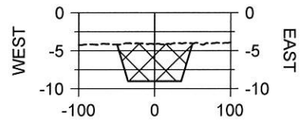

EAC1 15+83

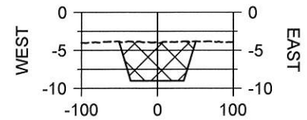

EAC1 25+83

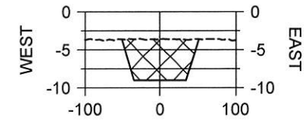

EAC1 35+83

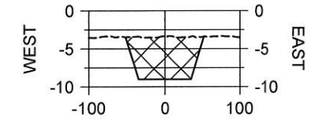

EAC1 45+83

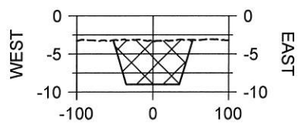

EAC1 55+83

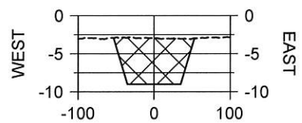

EAC1 65+83

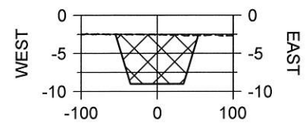

EAC1 79+67

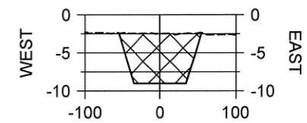

EAC1 89+67

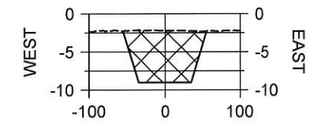

EAC1 99+67

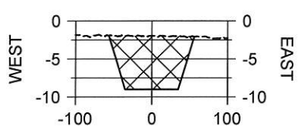

EAC1 109+67

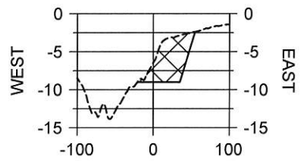

EAC1 119+67

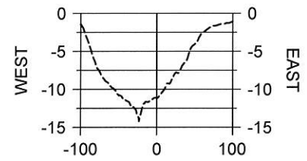

EAC1 129+67

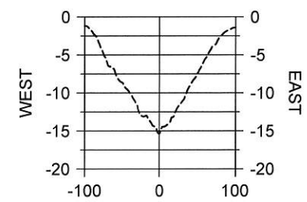

EAC1 139+67

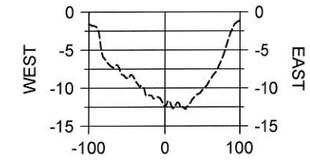

EAC1 149+67

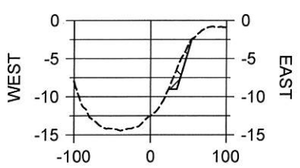

EAC1 159+67

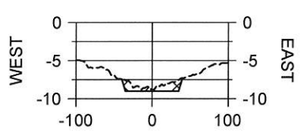

EAC1 169+67

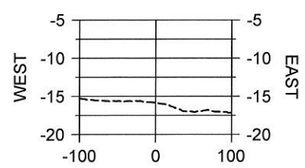

EAC1 179+67

HORIZONTAL GRAPHIC SCALE

200' 100' 0 200' 400'

20' 10' 0 20' 40'

VERTICAL GRAPHIC SCALE

STATE OF LOUISIANA
AMANDA M. TAYLOR
License No. 41999
PROFESSIONAL ENGINEER
IN
CIVIL ENGINEERING
2/22/2018

STATE OF LOUISIANA
SHANNON McCLAIN HAYNES
License No. 30552
PROFESSIONAL ENGINEER
IN
CIVIL ENGINEERING
2/22/2018

REV.	DATE	DESCRIPTION	BY

COASTAL PROTECTION AND RESTORATION AUTHORITY
150 TERRACE AVENUE
BATON ROUGE, LOUISIANA 70802

EQUIPMENT ACCESS SECTIONS

DESIGNED BY: AMANDA TAYLOR, P.E. - 0041999

APPROVED BY: SHANNON HAYNES, P.E. - 0030552

COLE'S BAYOU
MARSH RESTORATION PROJECT

STATE PROJECT NUMBER: TV-63

DRAWN BY: SHANE FAUST

DATE: FEB. 2018

SHEET 45 OF 50

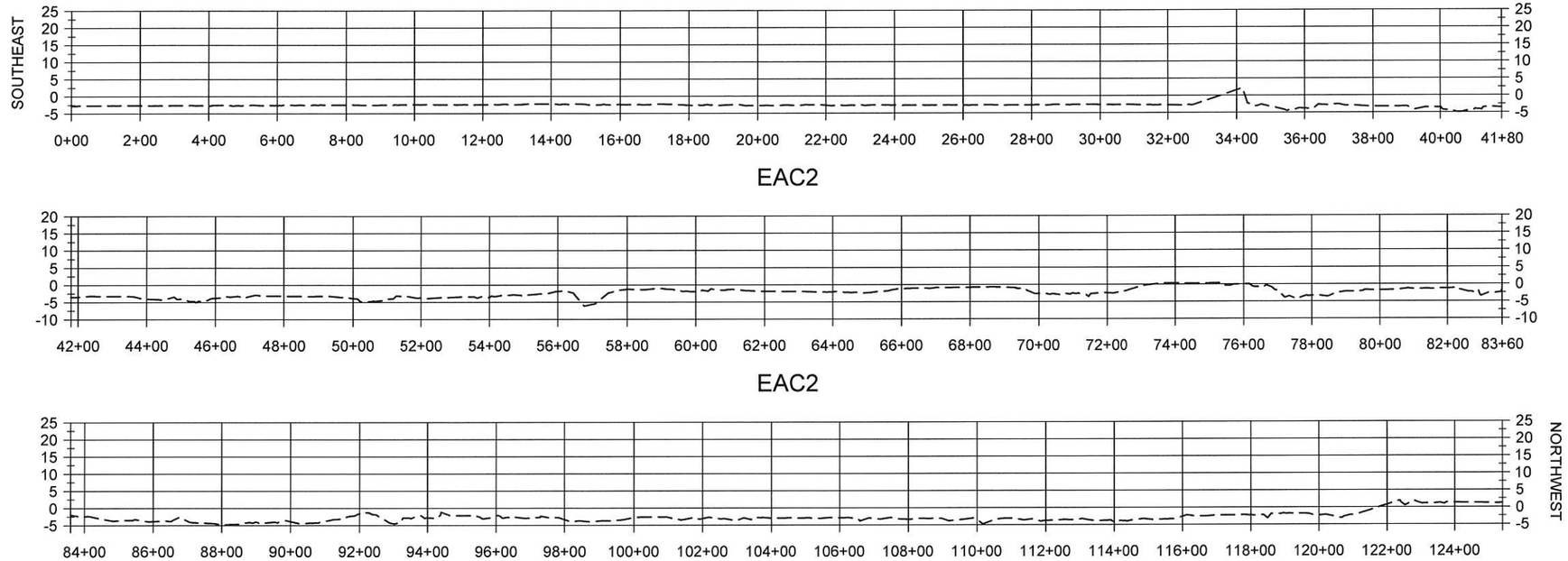

HORIZONTAL GRAPHIC SCALE
400' 200' 0 400' 800'
40' 20' 0 40' 80'
VERTICAL GRAPHIC SCALE

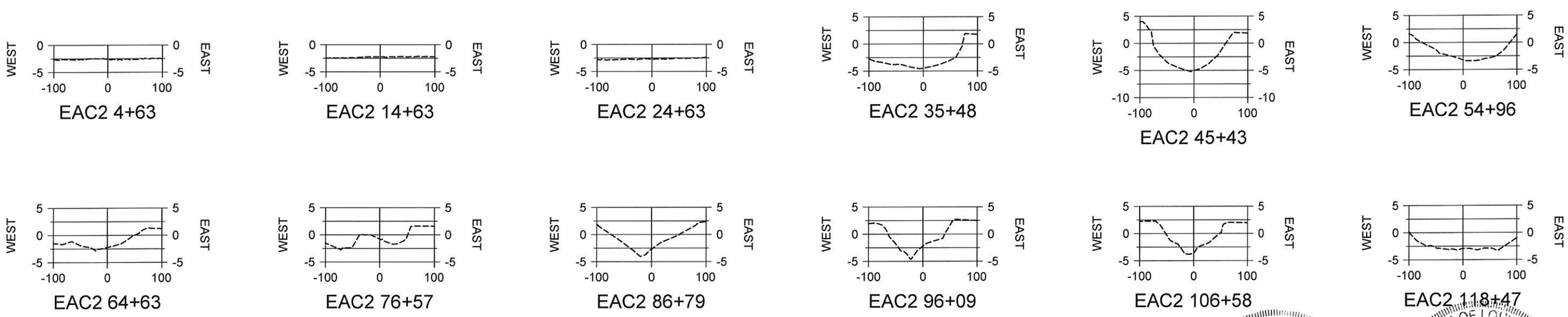

HORIZONTAL GRAPHIC SCALE
200' 100' 0 200' 400'
20' 10' 0 20' 40'
VERTICAL GRAPHIC SCALE

STATE OF LOUISIANA
AMANDA M. TAYLOR
License No 41999
PROFESSIONAL ENGINEER
IN
CIVIL ENGINEERING
4/22/2018

STATE OF LOUISIANA
SHANNON McCLAIN HAYNES
License No. 30552
PROFESSIONAL ENGINEER
IN
CIVIL ENGINEERING

REV.	DATE	DESCRIPTION	BY

COASTAL PROTECTION AND RESTORATION AUTHORITY
150 TERRACE AVENUE
BATON ROUGE, LOUISIANA 70802

EQUIPMENT ACCESS SECTIONS

DESIGNED BY: AMANDA TAYLOR, P.E. - 0041999
APPROVED BY: SHANNON HAYNES, P.E. - 0030552

COLE'S BAYOU
MARSH RESTORATION PROJECT

STATE PROJECT NUMBER: TV-63
DRAWN BY: SHANE FAUST

DATE: FEB. 2018

SHEET 46 OF 50

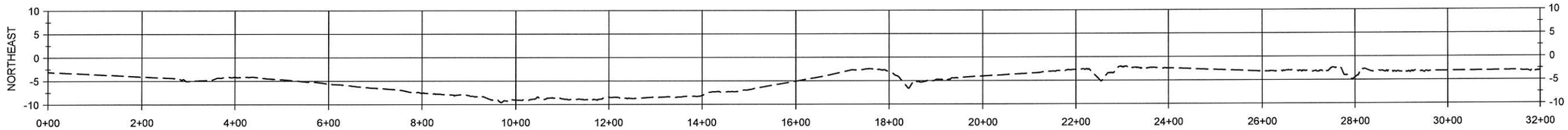

EAC3

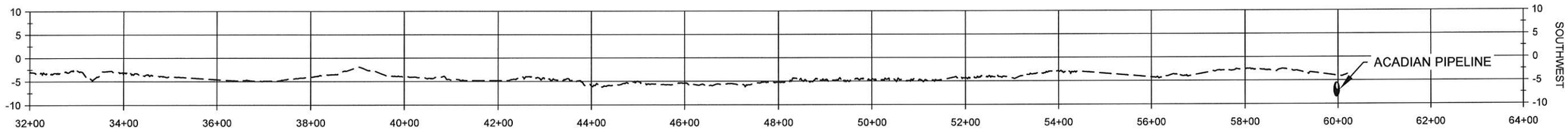

EAC3

HORIZONTAL GRAPHIC SCALE
300' 150' 0 300' 600'
30' 15' 0 30' 60'
VERTICAL GRAPHIC SCALE

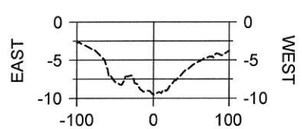

EAC3 9+69

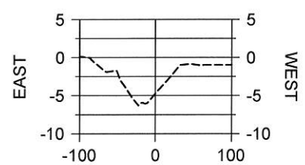

EAC3 18+25

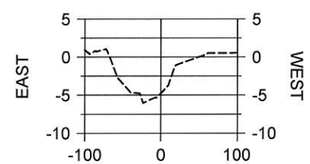

EAC3 27+96

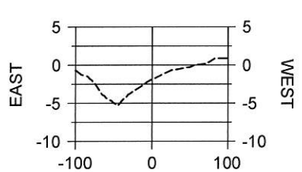

EAC3 39+02

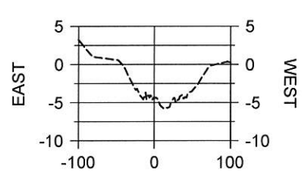

EAC3 49+31

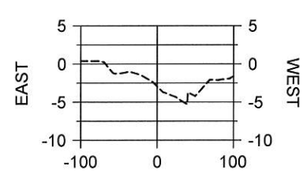

EAC3 59+06

HORIZONTAL GRAPHIC SCALE
200' 100' 0 200' 400'
20' 10' 0 20' 40'
VERTICAL GRAPHIC SCALE

STATE OF LOUISIANA
AMANDA M. TAYLOR
License No 41999
PROFESSIONAL ENGINEER
IN
CIVIL ENGINEERING
2/27/2018

STATE OF LOUISIANA
SHANNON McCLAIN HAYNES
License No. 30552
PROFESSIONAL ENGINEER
IN
CIVIL ENGINEERING

REV.	DATE	DESCRIPTION	BY

COASTAL PROTECTION AND RESTORATION AUTHORITY
150 TERRACE AVENUE
BATON ROUGE, LOUISIANA 70802

EQUIPMENT ACCESS SECTIONS

DESIGNED BY: AMANDA TAYLOR, P.E. - 0041999
APPROVED BY: SHANNON HAYNES, P.E. - 0030552

COLE'S BAYOU
MARSH RESTORATION PROJECT

STATE PROJECT NUMBER: TV-63
DRAWN BY: SHANE FAUST

DATE: FEB. 2018

SHEET 47 OF 50

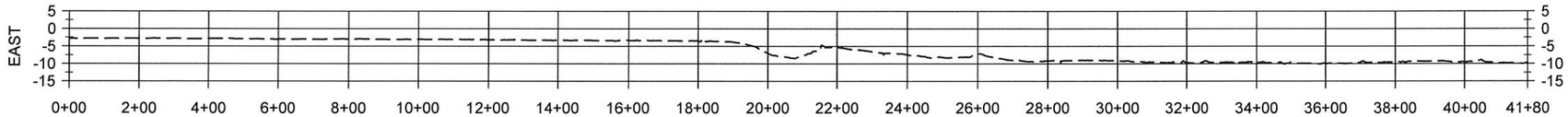

EAC4

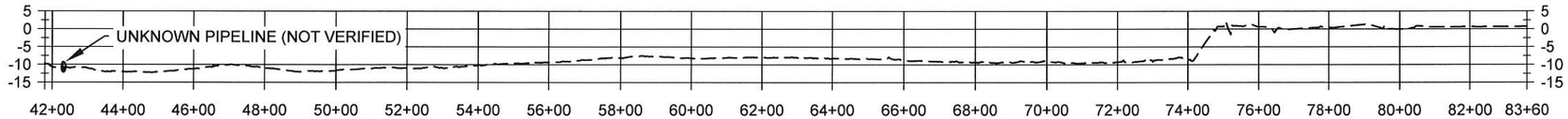

EAC4 CONTINUED

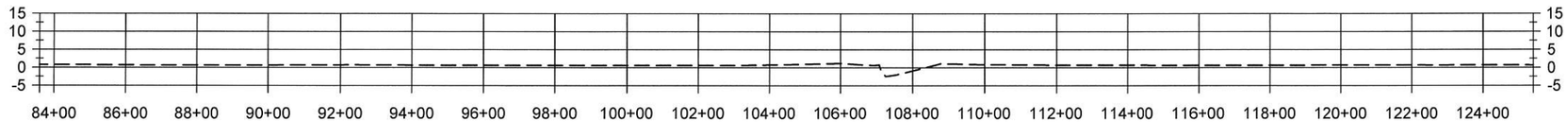

EAC4 CONTINUED

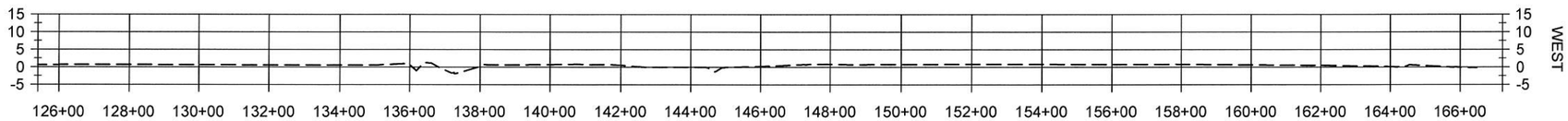

EAC4 CONTINUED

HORIZONTAL GRAPHIC SCALE
400' 200' 0 400' 800'
40' 20' 0 40' 80'
VERTICAL GRAPHIC SCALE

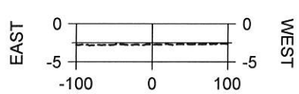

EAC4 1+52

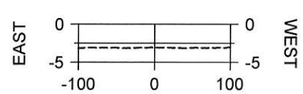

EAC4 11+52

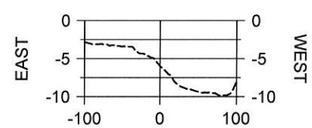

EAC4 21+52

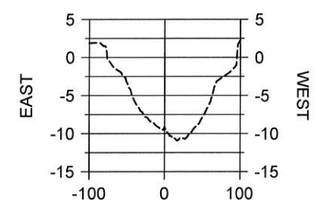

EAC4 28+36

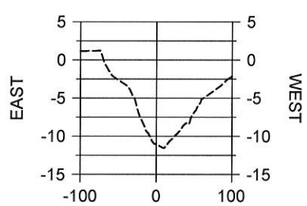

EAC4 48+01

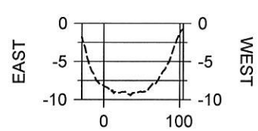

EAC4 58+07

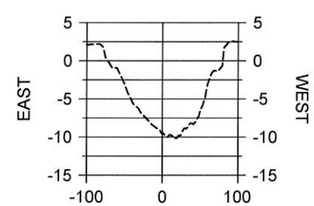

EAC4 68+09

HORIZONTAL GRAPHIC SCALE
200' 100' 0 200' 400'
20' 10' 0 20' 40'
VERTICAL GRAPHIC SCALE

STATE OF LOUISIANA
AMANDA M. TAYLOR
License No 41999
PROFESSIONAL ENGINEER
IN
CIVIL ENGINEERING
2/22/2018

STATE OF LOUISIANA
SHANNON McCLAIN HAYNES
License No. 30552
PROFESSIONAL ENGINEER
IN
CIVIL ENGINEERING
2/22/2018

REV.	DATE	DESCRIPTION	BY

COASTAL PROTECTION AND RESTORATION AUTHORITY
150 TERRACE AVENUE
BATON ROUGE, LOUISIANA 70802

EQUIPMENT ACCESS SECTIONS

DESIGNED BY: AMANDA TAYLOR, P.E. - 0041999
APPROVED BY: SHANNON HAYNES, P.E. - 0030552

COLE'S BAYOU
MARSH RESTORATION PROJECT

STATE PROJECT NUMBER: TV-63
DRAWN BY: SHANE FAUST

DATE: FEB. 2018

SHEET 48 OF 50

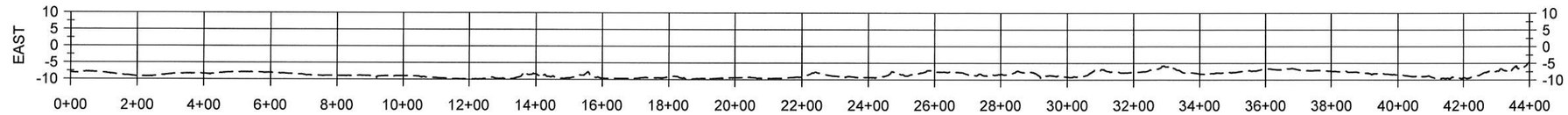

EAC5

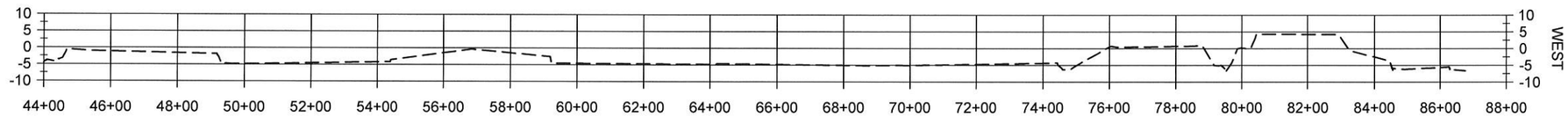

EAC5 CONTINUED

HORIZONTAL GRAPHIC SCALE
400' 200' 0 400' 800'
40' 20' 0 40' 80'
VERTICAL GRAPHIC SCALE

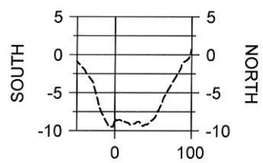

EAC5 14+20

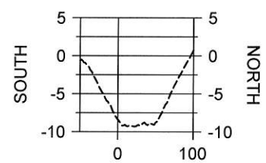

EAC5 34+22

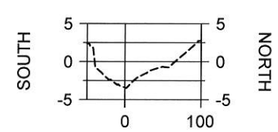

EAC5 44+50

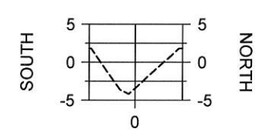

EAC5 54+50

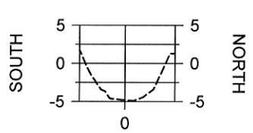

EAC5 64+18

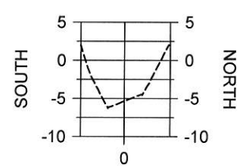

EAC5 74+50

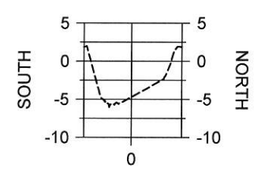

EAC5 84+50

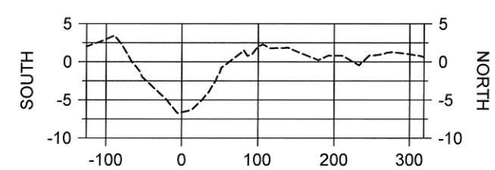

EAC5 86+77

HORIZONTAL GRAPHIC SCALE
200' 100' 0 200' 400'
20' 10' 0 20' 40'
VERTICAL GRAPHIC SCALE

STATE OF LOUISIANA
AMANDA M. TAYLOR
License No. 41999
PROFESSIONAL ENGINEER
IN
CIVIL ENGINEERING
2/22/2018

STATE OF LOUISIANA
SHANNON McCLAIN HAYNES
License No. 30552
PROFESSIONAL ENGINEER
IN
CIVIL ENGINEERING

REV.	DATE	DESCRIPTION	BY

COASTAL PROTECTION AND RESTORATION AUTHORITY
150 TERRACE AVENUE
BATON ROUGE, LOUISIANA 70802

EQUIPMENT ACCESS SECTIONS

DESIGNED BY: AMANDA TAYLOR, P.E. - 0041999
APPROVED BY: SHANNON HAYNES, P.E. - 0030552

COLE'S BAYOU
MARSH RESTORATION PROJECT

STATE PROJECT NUMBER: TV-63
DRAWN BY: SHANE FAUST

DATE: FEB. 2018

SHEET 49 OF 50

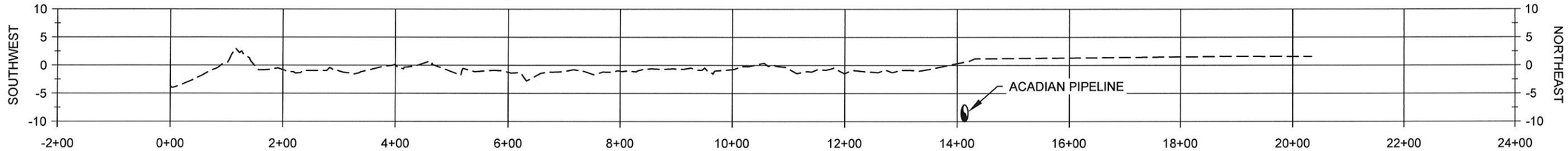

DPC1

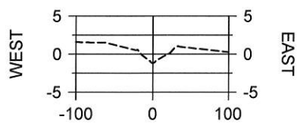

DPC1 7+72

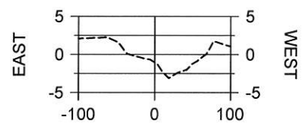

DPC2 3+63

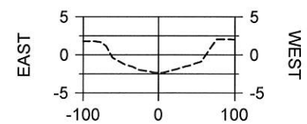

DPC2 13+63

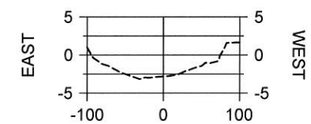

DPC2 23+63

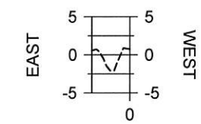

DPC2 37+31

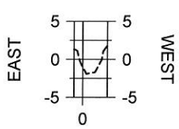

DPC2 43+63

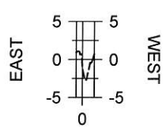

DPC2 50+46

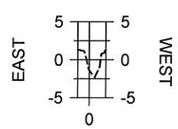

DPC2 53+56

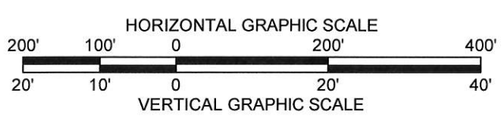

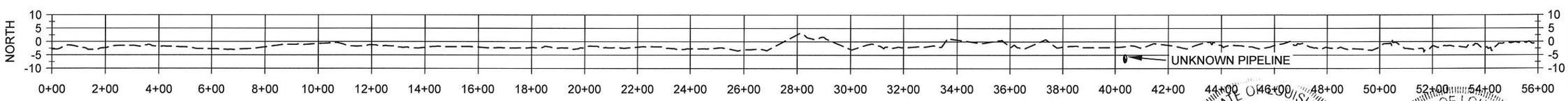

DPC2

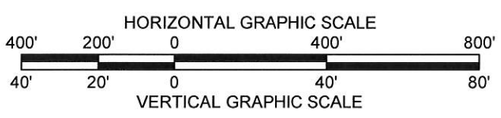

STATE OF LOUISIANA
AMANDA M. TAYLOR
License No. 41999
PROFESSIONAL ENGINEER
IN
CIVIL ENGINEERING
2/22/2018

STATE OF LOUISIANA
SHANNON McCLAIN HAYNES
License No. 30552
PROFESSIONAL ENGINEER
IN
CIVIL ENGINEERING
2/21/2018

REV.	DATE	DESCRIPTION	BY

COASTAL PROTECTION AND RESTORATION AUTHORITY
150 TERRACE AVENUE
BATON ROUGE, LOUISIANA 70802

EQUIPMENT ACCESS SECTIONS

DESIGNED BY: AMANDA TAYLOR, P.E. - 0041999
APPROVED BY: SHANNON HAYNES, P.E. - 0030552

COLE'S BAYOU MARSH RESTORATION PROJECT

STATE PROJECT NUMBER: TV-63
DRAWN BY: SHANE FAUST

DATE: FEB. 2018

SHEET 50 OF 50