RACCOON ISLAND
SHORE PROTECTION/MARSH CREATION PROJECT
PHASE A
(TE-48)

BUILT BY
LA. DEPT. OF NATURAL RESOURCES
WITH THE ASSISTANCE OF
NATURAL RESOURCES CONSERVATION SERVICE
OF THE
UNITED STATES DEPARTMENT OF AGRICULTURE
2005

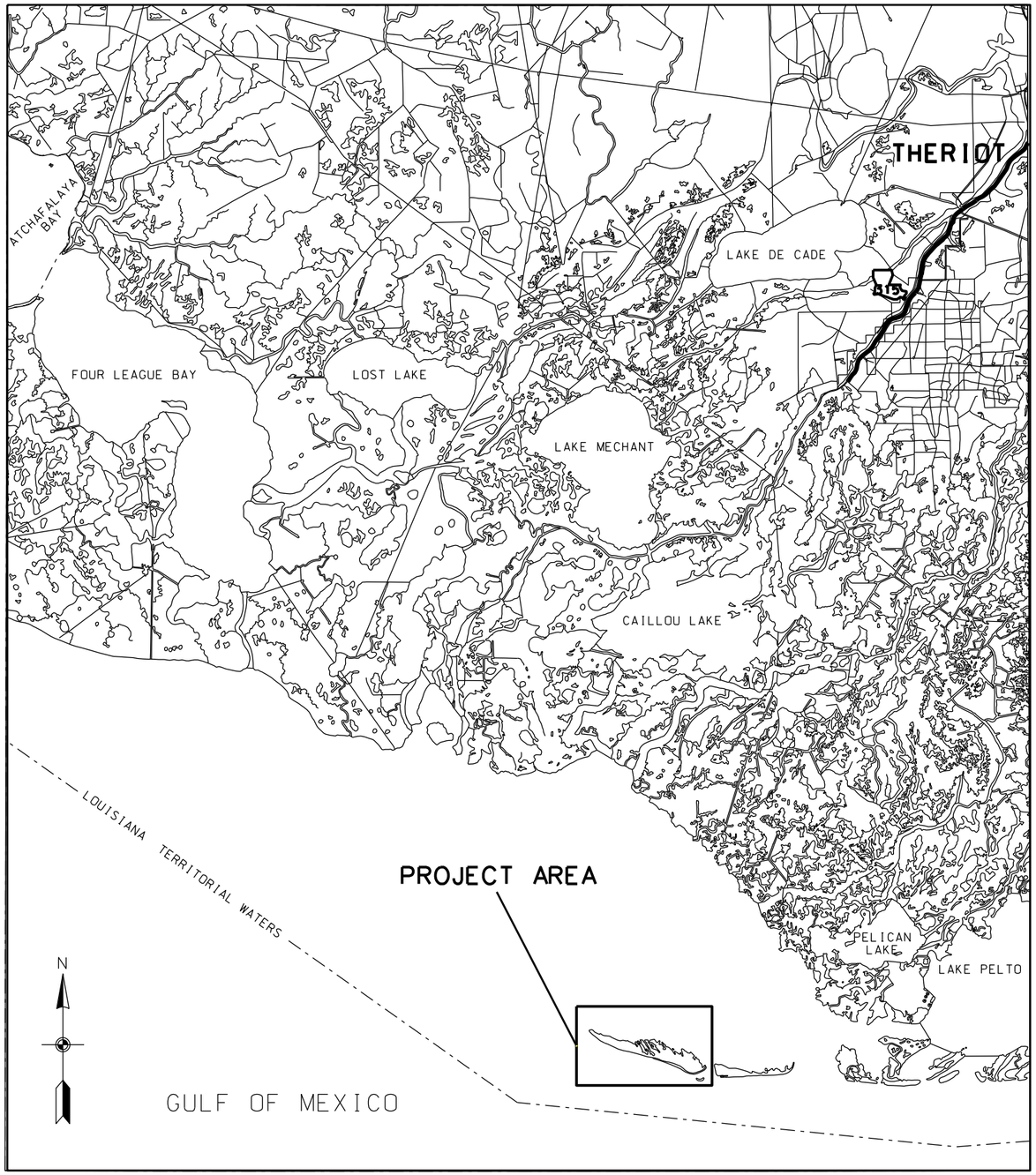

VICINITY MAP

SCALE IN MILES
1 0 2 4 6

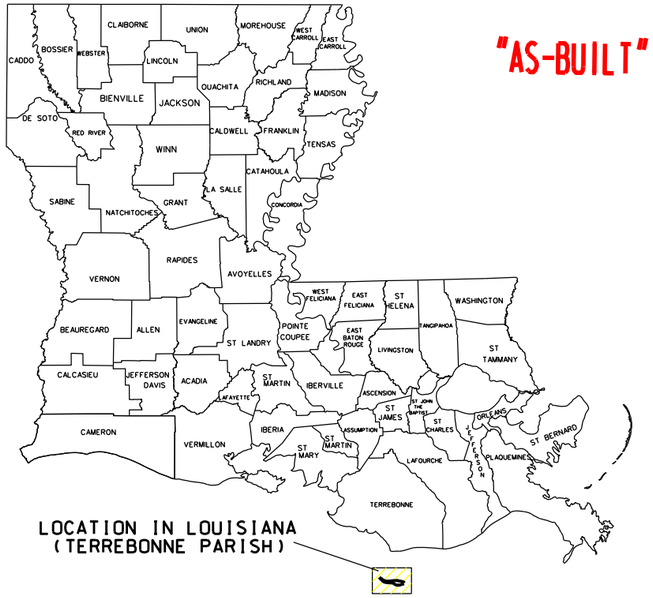

LOCATION IN LOUISIANA
(TERREBONNE PARISH)

"AS-BUILT"

INDEX OF DRAWINGS

1 COVER SHEET - VICINITY MAP
2 SITE MAP
3 PLAN MAP/TYPICAL-BREAKWATER SECTION
4 CONSTRUCTION LIMITS
5 TYPICAL-EAST GROIN
6 DETAILS-GROIN/BREAKWATER/SETTLEMENT PLATE
7 SOIL BORING LOGS-B1 THRU B6
8 SOIL BORING LOGS-B7 THRU B9
9 SOIL BORING LOGS-B10 & B11
10 X-SECTIONS-BREAKWATER #8 & #9
11 X-SECTIONS-BREAKWATER #10 & #11
12 X-SECTIONS-BREAKWATER #12 & #13
13 X-SECTIONS-BREAKWATER #14 & #15
14 TYPICAL SECTIONS-EAST GROIN STATION 0+00-0+08
15 TYPICAL SECTIONS-EAST GROIN STATION 1+00-2+00
16 TYPICAL SECTIONS-EAST GROIN STATION 3+00-4+00
17 TYPICAL SECTIONS-EAST GROIN STATION 5+00-6+00
18 TYPICAL SECTIONS-EAST GROIN STATION 7+00-8+00
19 TYPICAL SECTIONS-EAST GROIN STATION 9+00-9+26

MOD #1

"AS-BUILT PLANS"

SUBMITTED BY: WARREN BLANCHARD — GOVERNMENT REPRESENTATIVE — DATE 02/09/11

APPROVED BY: ASSISTANT STATE CONSERVATION ENGINEER — DATE

BRADLEY STICKER — STATE CONSERVATION ENGINEER — DATE

CONTRACT NO. AG-7217-C-05-0016
CONTRACTOR CHOCTAW TRANSPORTATION CO., INC.
INSPECTOR MELVIN GUIDRY
DATE OF COMPLETION 09/21/07

STATE OF LOUISIANA
REG. NO. 8033
REGISTERED PROFESSIONAL ENGINEER
IN
CIVIL ENGINEERING

Date
Approved by E.J. GIERING III 06/05
Title STATE CONSERVATION ENGINEER ALEXANDRIA, LA.
Title

Date
Designed R. MANUEL 05/05
Drawn G.BURNS 05/05
Traced
Checked R. FAULKNER 05/05

COVER SHEET - VICINITY MAP
RACCOON ISLAND PHASE A
(TE-48) SHORELINE PROTECTION
TERREBONNE PARISH, LOUISIANA

U.S. DEPARTMENT OF AGRICULTURE - NATURAL RESOURCES CONSERVATION SERVICE

REVISIONS

NO.	DATE	APPR.	TITLE
M1	11/05	B.A.S.	A.S.C.E.

CAD FILENAME
LA350001M1.DGN
PROJECT NO.
LA350
SHEET NO 01M1 OF 19

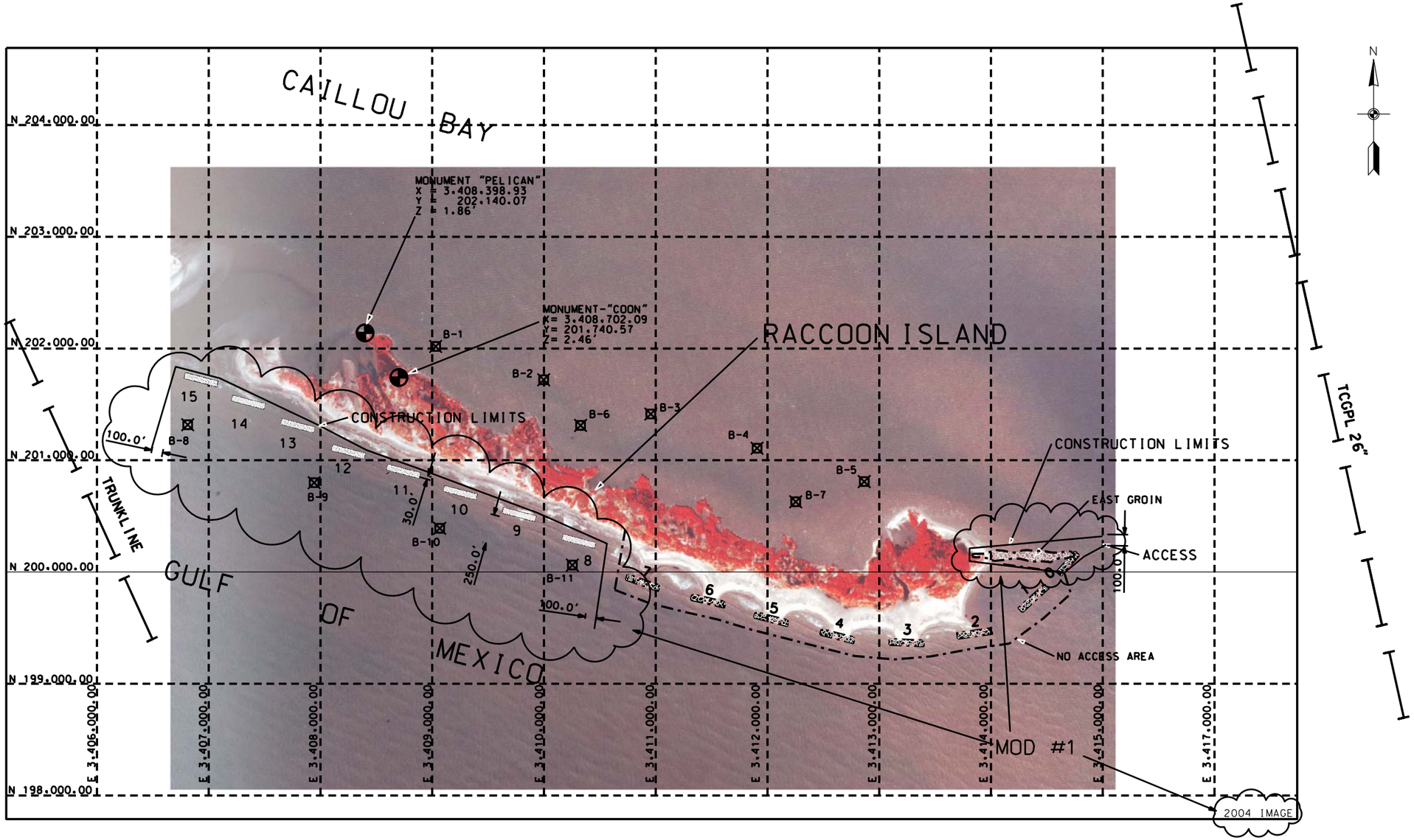

SITE MAP

"AS-BUILT"

TBM LOCATION

TBM 1-N203745.77.E3404797.88.EL. 2.87'
TBM 2-N205158.83.E3402658.28.EL. 2.42'

SCALE IN FEET

1000 0 1000 2000

DATUM: ALL HORIZONTAL COORDINATES - NAD83
ALL VERTICAL COORDINATES - NAVD88

NOTE:
1. ALL BREAKWATERS ARE LOCATED APPROXIMATELY 250' FROM THE SHORELINE AS STAKED IN THE FIELD BY COTR.
2. WATER DEPTHS VARY FROM 3' TO 11' DEPENDING ON LOCATION AND TIDAL SURGE.
3. EXCAVATION FOR FLOATATION WILL NOT BE ALLOWED.

NOTICE:
48 HOURS BEFORE DIGGING
CALL 1-800-272-3020
TO LOCATE UTILITY LINES

NOTE:
KNOWN PIPELINES AND UTILITIES ARE SHOWN ON THE PLANS. IT IS POSSIBLE THAT SOME MAY EXIST THAT HAVE NOT BEEN SHOWN. THE CONTRACTOR SHALL BE ON THE ALERT FOR SUCH PIPELINES AND UTILITES. AND SHALL REPORT THEM IMMEDIATELY TO THE CONTRACTING OFFICER.

LEGEND:

- BREAKWATER
- EXISTING BREAKWATER
- EAST GROIN
- PIPELINES
- TBM
- MONUMENT
- BORING
- CONSTRUCTION LIMITS

STATE OF LOUISIANA
E.J. GIERING, III
REG. NO. 8033
REGISTERED PROFESSIONAL ENGINEER
IN
CIVIL ENGINEERING

Designed	R. MANUEL	05/05
Drawn	G.BURNS	05/05
Traced		
Checked	R.FAULKNER	05/05

Approved by E.J.GIERING III 06/05
Title State Conservation Engineer
Alexandria, Louisiana

SITE MAP
RACCOON ISLAND PHASE A
(TE-48) SHORELINE PROTECTION
TERREBONNE PARISH, LOUISIANA

U.S. DEPARTMENT OF AGRICULTURE - NATURAL RESOURCES CONSERVATION SERVICE

REVISIONS

NO.	DATE	APPR.	TITLE
M1	11/05	B.A.S.	A.S.C.E.

CAD FILENAME
LA350002M1.DGN

PROJECT NO.
LA350

SHEET NO 2M1 OF 19

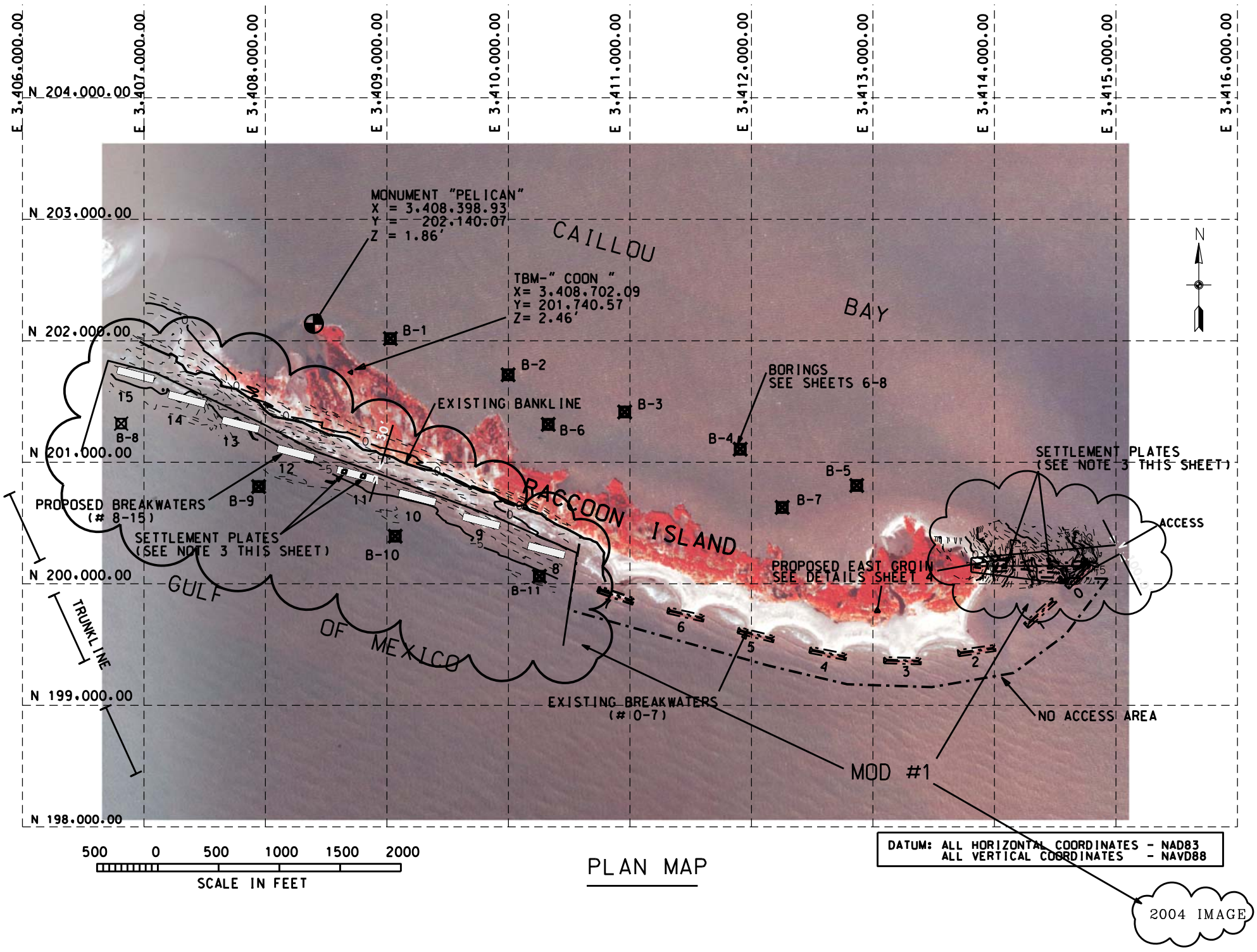

PLAN MAP

DATUM: ALL HORIZONTAL COORDINATES - NAD83
ALL VERTICAL COORDINATES - NAVD88

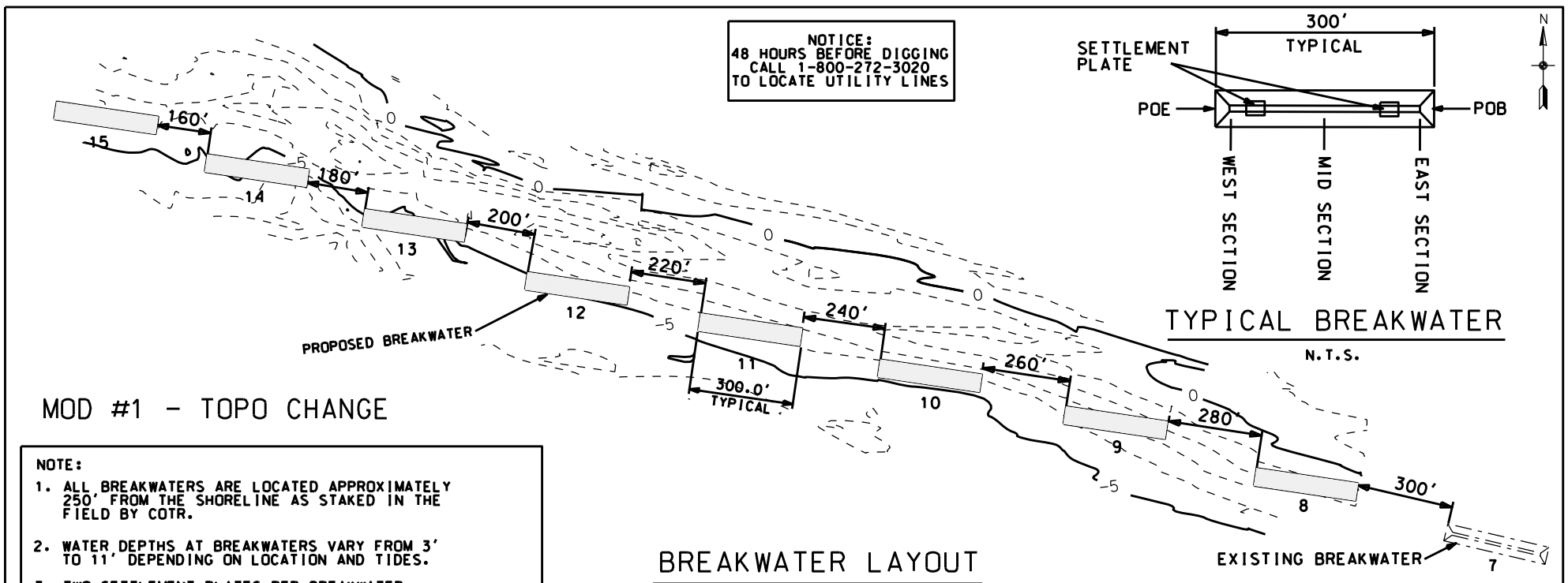

TYPICAL BREAKWATER

N.T.S.

MOD #1 - TOPO CHANGE

NOTE:

1. ALL BREAKWATERS ARE LOCATED APPROXIMATELY 250' FROM THE SHORELINE AS STAKED IN THE FIELD BY COTR.
2. WATER DEPTHS AT BREAKWATERS VARY FROM 3' TO 11' DEPENDING ON LOCATION AND TIDES.
3. TWO SETTLEMENT PLATES PER BREAKWATER AND GROIN.SEE SHEET 5 FOR PLATE PLACEMENT ON GROIN. AND SHEET 6 FOR PLATE PLACEMENT ON BREAKWATERS.

BREAKWATER LAYOUT

N.T.S.

MOD #1 BREAKWATER C/L LOCATIONS

NO.	BEGIN	END	NO.	BEGIN	END
8	X= ~~3410457.96~~ 3410461.68 Y= ~~200237.38~~ 200318.65	X= ~~3410166.73~~ 3410140.38 Y= ~~200312.80~~ 200318.65	12	X= ~~3408394.86~~ 3408398.67 Y= ~~201037.67~~ 201036.47	X= ~~3408104.50~~ 3408093.07 Y= ~~201113.09~~ 201120.59
9	X= ~~3409921.43~~ 3409936.77 Y= ~~200477.10~~ 200475.42	X= ~~3409631.07~~ 3409605.62 Y= ~~200522.52~~ 200527.35	13	X= ~~3407940.58~~ 3407945.45 Y= ~~201272.26~~ 201270.90	X= ~~3407650.22~~ 3407640.49 Y= ~~201347.67~~ 201318.79
10	X= ~~3409395.33~~ 3409420.55 Y= ~~200672.28~~ 200662.20	X= ~~3409104.97~~ 3409094.48 Y= ~~200747.70~~ 200747.22	14	X= ~~3407498.86~~ 3407502.85 Y= ~~201481.49~~ 201477.36	X= ~~3407208.49~~ 3407191.95 Y= ~~201556.91~~ 201562.75
11	X= ~~3408886.44~~ 3408895.42 Y= ~~200863.07~~ 200862.33	X= ~~3408596.07~~ 3408569.38 Y= ~~200938.49~~ 200938.73	15	X= ~~3407076.36~~ 3407081.54 Y= ~~201682.55~~ 201679.28	X= ~~3406786.00~~ 3406772.36 Y= ~~201757.97~~ 201761.00

NOTE:
KNOWN PIPELINES AND UTILITIES ARE SHOWN ON THE PLANS. IT IS POSSIBLE THAT SOME MAY EXIST THAT HAVE NOT BEEN SHOWN. THE CONTRACTOR SHALL BE ON THE ALERT FOR SUCH PIPELINES AND UTILITES. AND SHALL REPORT THEM IMMEDIATELY TO THE CONTRACTING OFFICER.

LEGEND:

- PROPOSED BREAKWATERS/GROINS
- EXISTING BREAKWATERS
- PIPELINES
- TBM
- MONUMENT
- BORINGS
- CONSTRUCTION LIMITS

"AS-BUILT"

STATE OF LOUISIANA
E.J. GIERING, III
REG. NO. 8033
REGISTERED
PROFESSIONAL ENGINEER
IN
CIVIL ENGINEERING

PROJECT NO. LA350
SHEET NO 3M1 OF 19
CAD FILENAME LA350003M1.DGN

REVISIONS			
DATE	REV.NO.	APPR.	TITLE
11/05	M1	B.A.S.	A.S.C.E.

PLAN MAP/TYPICAL-BREAKWATER SECTION
RACCOON ISLAND PHASE A
(TE-48) SHORELINE PROTECTION
TERREBONNE PARISH, LOUISIANA

U.S. DEPARTMENT OF AGRICULTURE - NATURAL RESOURCES CONSERVATION SERVICE

		Date
Designed	R. MANUEL	05/05
Drawn	G.BURNS	05/05
Traced		
Checked	R.FAULKNER	05/05

		Date
Approved by	E.J.GIERING III	06/05
Title	State Conservation Engineer Alexandria, Louisiana	
Title		

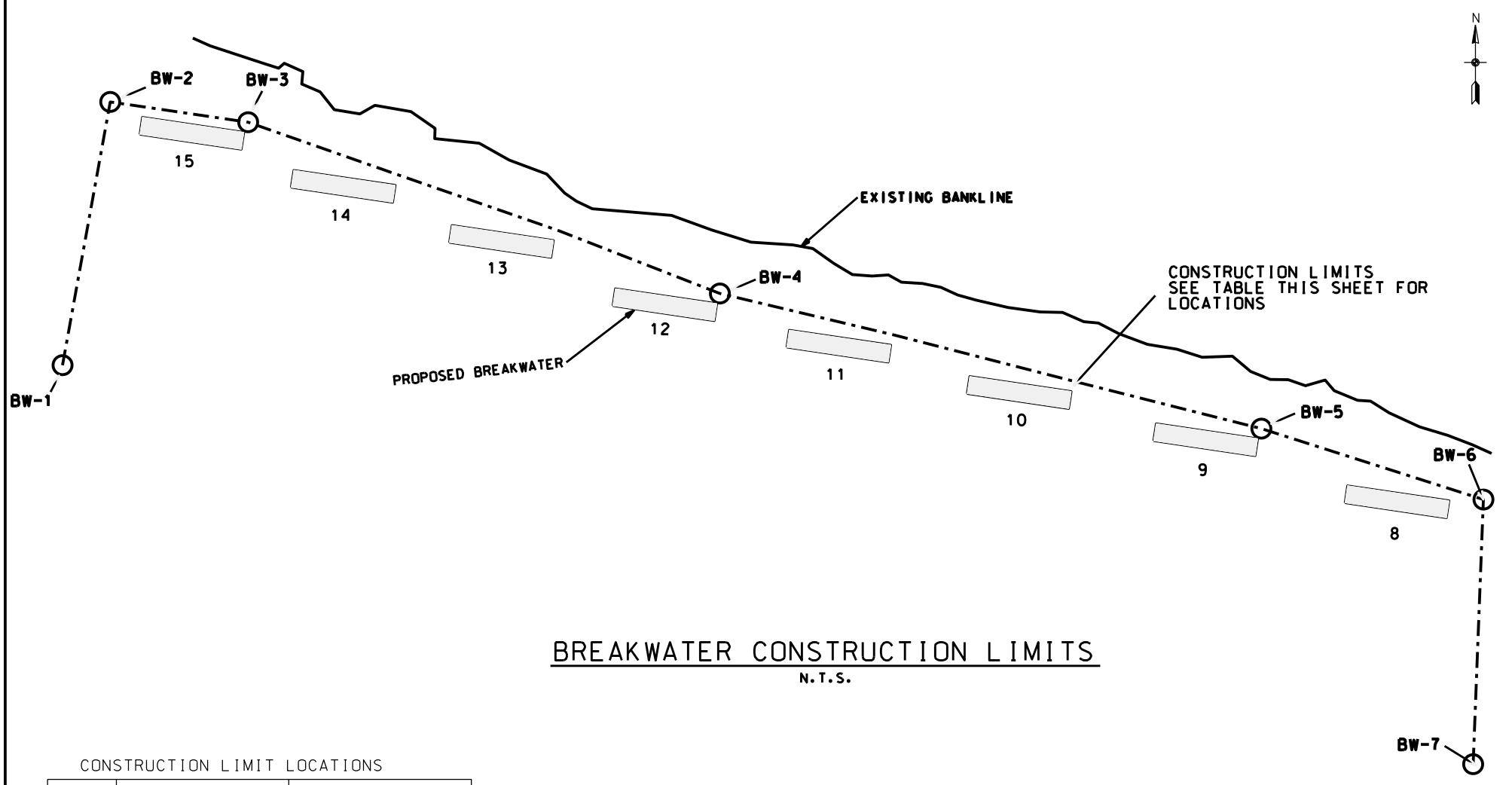

BREAKWATER CONSTRUCTION LIMITS

N.T.S.

CONSTRUCTION LIMIT LOCATIONS

PT#	NORTHING	EASTING
BW-1	201088.06	3406483.54
BW-2	201836.76	3406704.07
BW-3	201734.82	3407097.86
BW-4	201090.63	3408412.75
BW-5	200529.55	3409941.27
BW-6	200254.53	3410563.35
BW-7	199490.08	3410450.82

MOD #1
CHANGE IN ALL CONSTRUCTION LIMITS COORDINATES

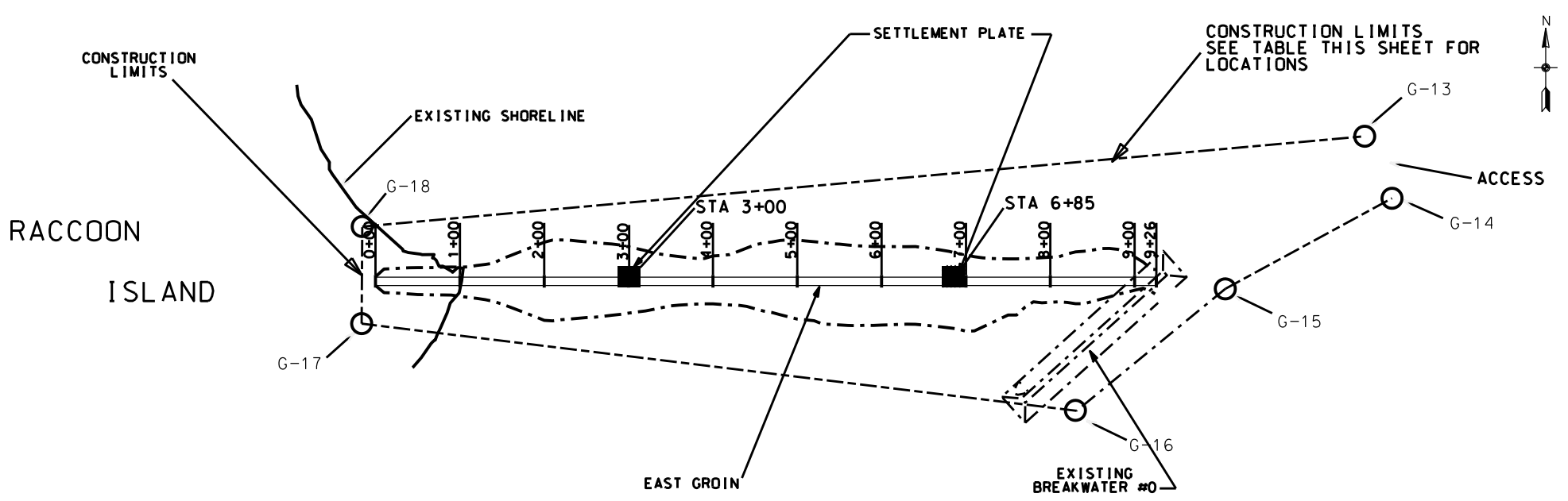

EAST GROIN CONSTRUCTION LIMITS

N.T.S.

"AS-BUILT"

CONSTRUCTION LIMIT LOCATIONS

PT#	NORTHING	EASTING
G-13	200318.96	3414997.09
G-14	200245.36	3415029.46
G-15	200137.82	3414831.79
G-16	199993.13	3414655.49
G-17	200096.60	3413807.76
G-18	200211.79	3413808.39

MOD #1
CHANGE IN ALL CONSTRUCTION LIMITS COORDINATES

—·—·—·— CONSTRUCTION LIMITS

——— SHORELINE

STATE OF LOUISIANA
E.J. GIERING, III
REG. NO. 8033
REGISTERED
PROFESSIONAL ENGINEER
IN
CIVIL ENGINEERING

REVISIONS			
DATE	REV. NO.	APPR.	TITLE
11/05	M1	B.A.S.	A.S.C.E.

CAD FILENAME LA350004M1.DGN

PROJECT NO. LA350

SHEET NO 4M1 OF 19

CONSTRUCTION LIMITS
RACCOON ISLAND PHASE A
(TE-48) SHORELINE PROTECTION
TERREBONNE PARISH, LOUISIANA

U.S. DEPARTMENT OF AGRICULTURE - NATURAL RESOURCES CONSERVATION SERVICE

		Date
Designed	R. MANUEL	04/05
Drawn	G.BURNS	04/05
Traced		
Checked	R.FAULKNER	05/05

		Date
Approved by	E.J.GIERING III	05/05
Title	State Conservation Engineer Alexandria, Louisiana	
Title		

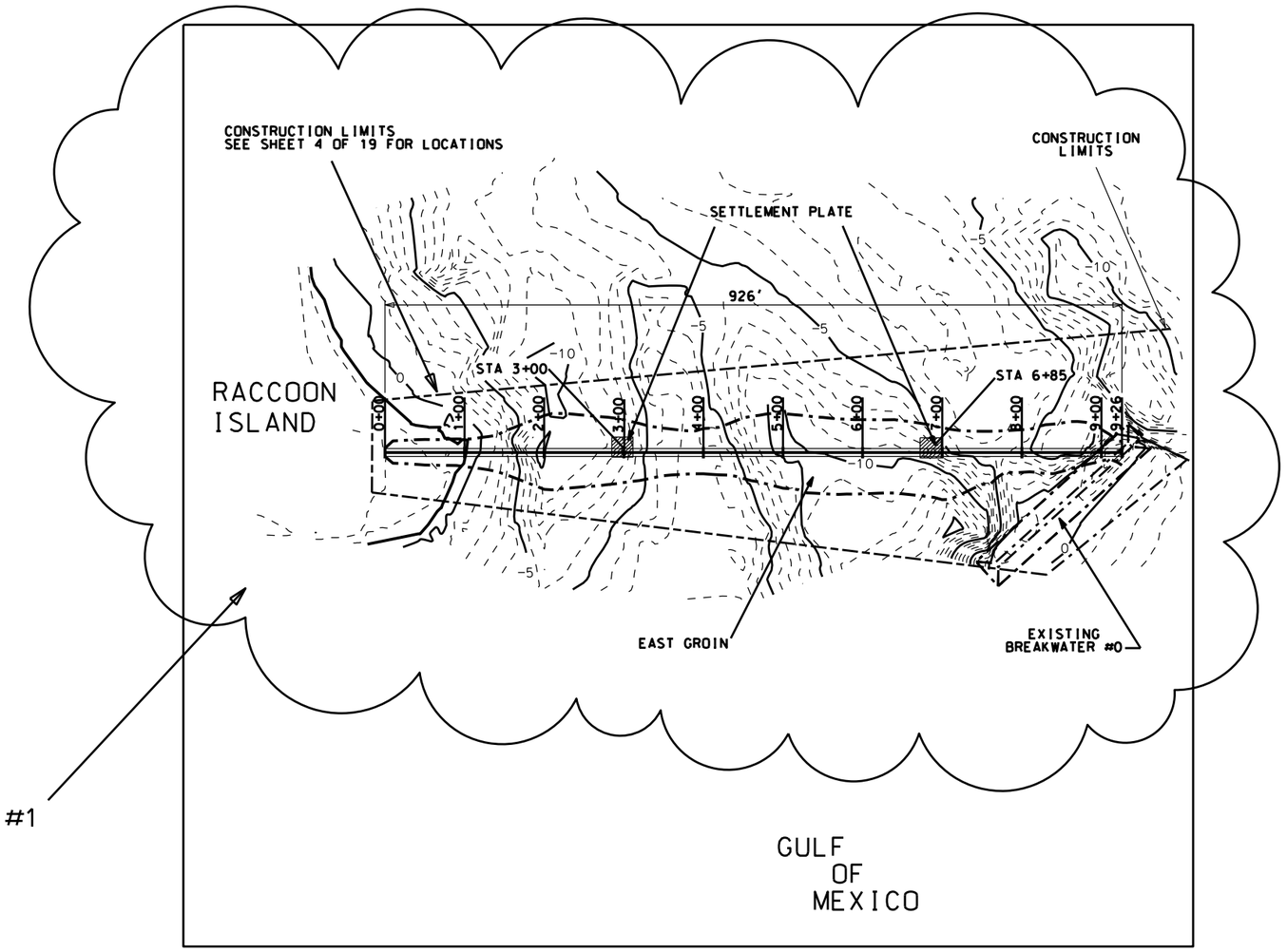

MOD #1

EAST GROIN

N.T.S.

EAST GROIN C/L LOCATION

	STA.	NORTHING	EASTING
POB	~~0+00~~	~~200146.79~~	~~3413824.21~~
POE	~~10+84~~	~~200146.79~~	~~3414749.99~~

0+00	201679.28	3407081.54
9+43	201761.00	3406772.36

NOTE:
KNOWN PIPELINES AND UTILITIES ARE SHOWN ON THE PLANS. IT IS POSSIBLE THAT SOME MAY EXIST THAT HAVE NOT BEEN SHOWN. THE CONTRACTOR SHALL BE ON THE ALERT FOR SUCH PIPELINES AND UTILITES. AND SHALL REPORT THEM IMMEDIATELY TO THE CONTRACTING OFFICER.

NOTE:
TWO SETTLEMENT PLATES TO BE PLACED IN GRION AS STAKED IN THE FIELD BY THE COTR.

NOTE:
EXCAVATION FOR FLOATATION CHANNEL WILL NOT BE ALLOWED.

NOTICE:
48 HOURS BEFORE DIGGING
CALL 1-800-272-3020
TO LOCATE UTILITY LINES

LEGEND:

- PROPOSED GROIN
- EXISTING BREAKWATER
- CONTOUR LINE
- LAND
- SETTLEMENT PLATE

"AS-BUILT"

STATE OF LOUISIANA
E.J. GIERING, III
REG. NO. 8033
REGISTERED
PROFESSIONAL ENGINEER
IN
CIVIL ENGINEERING

Date	
Approved by E.J. GIERING III 06/05	Title State Conservation Engineer Alexandria, Louisiana

	Date	
Designed	R. MANUEL	05/05
Drawn	G. BURNS	06/05
Traced		
Checked	R. FAULKNER	05/05

TYPICAL-EAST GROIN
RACCOON ISLAND PHASE A
(TE-48) SHORELINE PROTECTION
TERREBONNE PARISH, LOUISIANA

U.S. DEPARTMENT OF AGRICULTURE - NATURAL RESOURCES CONSERVATION SERVICE

REVISIONS			
NO.	DATE	APPR.	TITLE
M1	11/05	B.A.S.	A.S.C.E.

CAD FILENAME
LA350005M1.DGN

PROJECT NO.
LA350

SHEET NO 5M1 OF 19

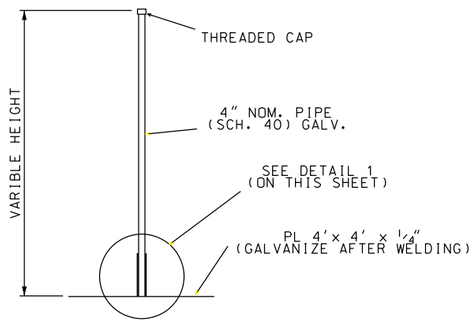

ELEVATION VIEW

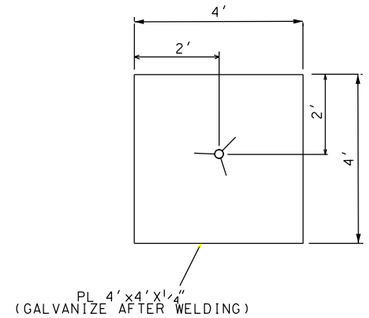

PLAN VIEW

SETTLEMENT PLATE DETAILS

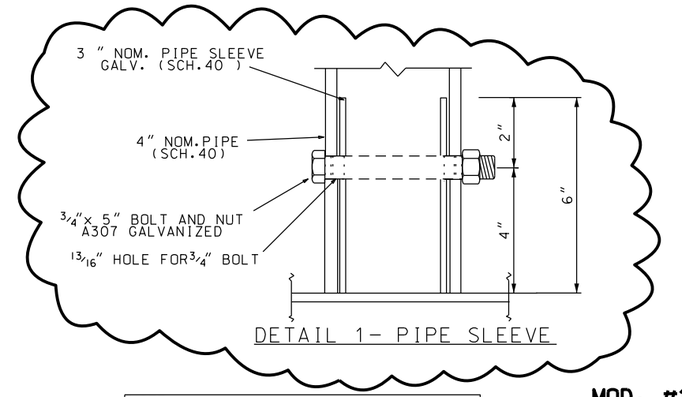

DETAIL 1- PIPE SLEEVE

NOTE:
1. THE SETTLEMENT PLATE ELEVATION SHALL BE DETERMINED BEFORE PLACING ROCK AND AT END OF CONSTRUCTION OF INDIVIDUAL BREAKWATERS OR GROIN.
2. THREADS ON CAP SHALL BE COLD GALVANIZED AFTER INSTALLATION.

MOD. #1
PIPE SIZE CHANGE

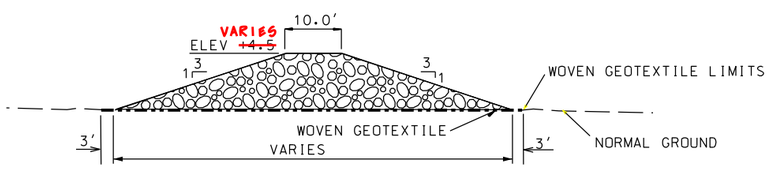

EAST GROIN SECTION
N.T.S.

RIPRAP GRADATION		
Material	% Lighter By Weight	Weight of Each Rock (Lbs)
Riprap	100	5000 - 2000
	50	2200 - 1000
	15 Maximum	1100 - 300

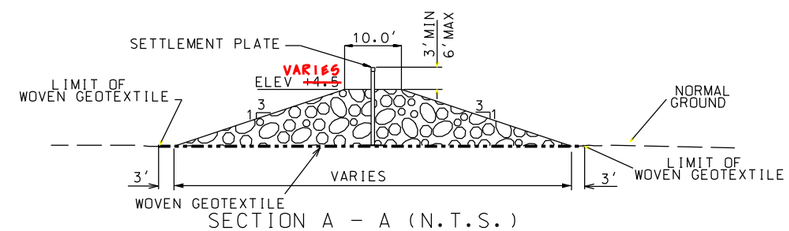

SECTION A - A (N.T.S.)
BREAKWATER SECTION

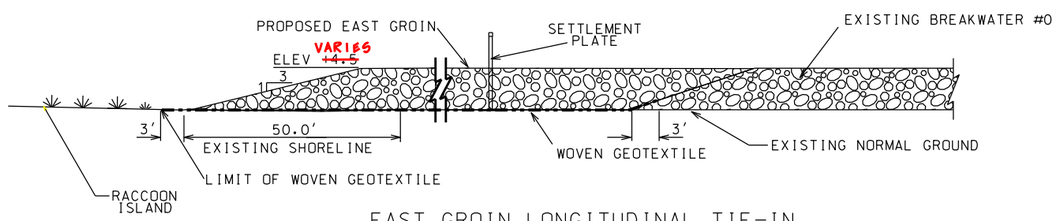

EAST GROIN LONGITUDINAL TIE-IN
RACCOON ISLAND & BREAKWATER #0

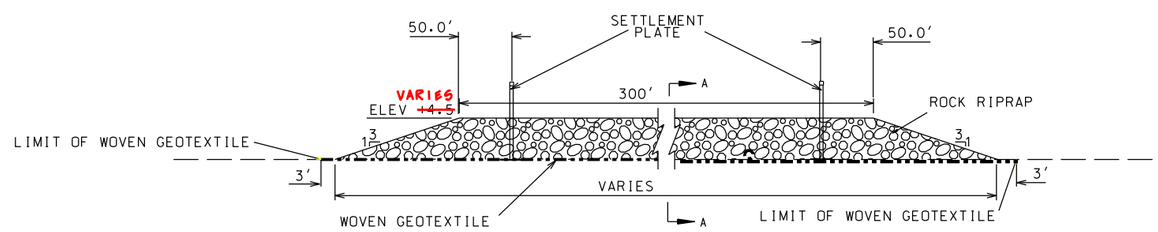

BREAKWATER LONGITUDINAL SECTION

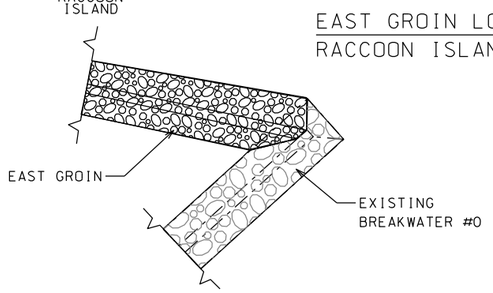

TOP VIEW-EAST GROIN TIE-IN

DATUM: ALL HORIZONTAL COORDINATES - NAD83
ALL VERTICAL COORDINATES - NAVD88

"AS-BUILT"

STATE OF LOUISIANA
E.J. GIERING, III
REG. NO. 8033
REGISTERED
PROFESSIONAL ENGINEER
IN
CIVIL ENGINEERING

(NOT TO SCALE)

		Date
Approved by	E.J.GIERING III State Conservation Engineer Alexandria, Louisiana	06/05
Title		
Title		

		Date
Designed	R. MANUEL	05/05
Drawn	G. BURNS	05/05
Traced		
Checked	C. LAFLEUR	05/05

DETAILS-GROIN/BREAKWATER/SETTLEMENT PLATE
RACCOON ISLAND PHASE A
(TE-48) SHORELINE PROTECTION
TERREBONNE PARISH, LOUISIANA

U.S. DEPARTMENT OF AGRICULTURE - NATURAL RESOURCES CONSERVATION SERVICE

REVISIONS			
NO.	DATE	APPR.	TITLE
M1	12/05	B.A.S.	A.S.C.E.

CAD FILENAME
LA350006.DGN

PROJECT NO.
LA 350

SHEET NO GM1 OF 19

B-1

DESCRIPTION	LL	PI	W	DD	SU
GROUNDWATER					
MUDLINE AT 1.9'					
LOOSE GRAY SLIGHTLY SILTY SAND (SM-SP) W/SHELLS			23		
			24		
LOOSE DARK GRAY CLAYEY SAND (SC) W/SHELLS					
-W/SHELLS			22		
-W/SHELLS	84	57	66	59	.39
SOFT DARK GRAY CLAY (CH)					
BORING COMPLETED AT 31.9'					

B-2

DESCRIPTION	LL	PI	W	DD	SU
GROUND WATER			25		
MUDLINE AT 4.0'					
LOOSE DARK GRAY SLIGHTLY SILTY SAND (SM-SP) W/ORGANICS			43		
-W/SHELLS					
LOOSE DARK GRAY CLAYEY SAND (SC) W/SHELLS			25		
LOOSE DARK SILTY SAND (SM) -W/SHELLS					
-VERY LOOSE W/SHELLS AT 12-13.5'					
LOOSE DARK GRAY SILT (ML)					
	90	59	72	56	.39
SOFY GRAY CLAY (ML)					
-W/SILTY SAND POCKETS AND FINE SHELLS					
	66	39	71	58	.34
BORING COMPLETED AT 34.0'					

B-3

DESCRIPTION	LL	PI	W	DD	SU
GROUND WATER			22		
MUDLINE AT 3.0'					
LOOSE GRAY SILTY SAND (SM)					
-W/SHELLS			22		
-W/SHELLS					
-(SM-SP) AT 11-12.5'					
VERY LOOSE GRAY SILT (ML)					
SOFT GRAY CLAY (CH)	67	41	40	76	.24
-W/SAND SEAMS AND SHELLS					
-W/SHELL LAYER					
-W/SHELLS					
BORING COMPLETED AT 33.0'					

B-4

DESCRIPTION	LL	PI	W	DD	SU
GROUNDWATER					
MUDLINE AT 2.5'					
LOOSE GRAY SILTY SAND (SM)			23		
-W/SHELLS					
	54	33	48		
VERY SOFT DARK GRAY CLAY (CH) W/SHELLS					
VERY SOFT DARK GRAY SILTY CLAY (CL)	44	119	50		
-W/SILT SEAMS AND SHELLS AT 15.5 TO 17.5'					
SOFT DARK GRAY SLIGHTY SILTY CLAY (CL-CH)	47	25	45		
-W/SILT SEAMS AND POCKETS					
BORING COMPLETED AT 32.5'					

B-5

DESCRIPTION	LL	PI	W	DD	SU
GROUNDWATER			19		
MUDLINE AT 3.0'					
LOOSE GRAY SLIGHTLY SILTY SAND (SM-SP)					
LOOSE GRAY SILTY SAND (SM) W/SWHELLS			22		
VERY LOOSE GRAY SILT (ML)					
VERY SOFT GRAY SILTY CLAY (CL)			48	72	.24
SOFT GRAY CLAYEY SILT (ML)	67	40	66	60	.38
-W/SAND SEAMS					
BORING COMPLETED AT 33.0'					

B-6

DESCRIPTION	LL	PI	W	DD	SU
GROUNDWATER			25		
MUDLINE AT 5.0'					
LOOSE DARK GRAY SILTY SAND (SM)			24		
-SLIGHTLY SILTY (SM-SP) W/SHELLS AT 13 TO 14.5'					
-FIRM W/SHELLS AT 18 TO 19.5'			38		
SOFT GRAY CLAY (CH)					
-W/MANY SHELL FRAGMENTS	62	36	61	63	.36
-W/SILT SEAMS, SILTY SAND POCKETS, AND SHELLS					
BORING COMPLETED AT 35.0'					

SOIL TYPE

- FIRM GRAY SLIGHTLY SILTY SAND (SM-SP)
- VERY SOFT TO SOFT GRAY CLAY (CH)
- SOFT GRAY CLAY (CH)
- LOOSE GRAY SILTY SAND (SM)
- VERY LOOSE GRAY SILT (ML)

SOIL BORINGS LOGS-B1 THRU B6
RACCOON ISLAND (TE-48)

LEGEND

LL	LIQUID LIMITS (%)
PI	PLASTICITY LIMIT (%)
W	WATER CONTENT (%)
DD	DRY DENSITY (pcf)
SU	UNDRAINED SHEAR STRENGTH (ksf)

"AS-BUILT"

STATE OF LOUISIANA
E.J. GIERING, III
REG. NO. 8033
REGISTERED PROFESSIONAL ENGINEER
IN
CIVIL ENGINEERING

Approved by E.J. GIERING II Date 05/05
State Conservation Engineer
Alexandria, Louisiana
Title
Title

Designed R. MANUEL Date 05/05
Drawn G. BURNS 05/05
Traced
Checked R. FAULKNER 05/05

SOIL BORING LOGS-B1 THRU B6
RACCOON ISLAND PHASE A
(TE-48) SHORELINE PROTECTION
TERREBONNE PARISH, LOUISIANA

U.S. DEPARTMENT OF AGRICULTURE - NATURAL RESOURCES CONSERVATION SERVICE

REVISIONS			
NO.	DATE	APPR.	TITLE

CAD FILENAME
LA350007.DGN

PROJECT NO.
LA 350

SHEET NO 7 OF 19

B-7

Elevation	Description	LL	PI	W	DD	SU
0	GROUNDWATER			23		
	MUDLINE AT 5.0'					
	LOOSE GRAY SLIGHTLY SILTY SAND (SM-SP)					
	-W/SHELLS			22		
-10	FIRM GRAY SLIGHTLY SILTY SAND (SM-SP)					
	-W/SHELLS AND WOOD					
	-LOOSE AT 18 TO 19'					
-20	VERY SOFT TO SOFT GRAY CLAY (CH)	68	46	74	58	.20
	-W/SILT SEAMS AND SHELLS					
-30		89	62	64	89	.39
	-W/SILT POCKETS AND SHELL LAYER					
-35	BORING COMPLETED AT 35.0'					

B-8

Elevation	Description	LL	PI	W	DD	SU
0				25		
	GROUNDWATER			23		
	MUDLINE AT 8.0'					
-10	LOOSE GRAY SILTY SAND (SM)					
	-W/SHELLS					
	-FIRM W/SHELL LAYER AT 14 TO 15.5'			44	75	.25
-20	VERY SOFT TO SOFT GRAY CLAY (CH)	43	19	45	77	.25
	-W/FINE SAND SEAMS AND SHELL TRACES					
	SOFT GRAY SLIGHTLY SILTY CLAY (CL)			76	56	.46
	-W/SAND LAYERS, SILT SEAMS, AND SHELLS					
-30	SOFT GRAY CLAY (CH)					
		77	53	44	76	.48
-40	SOFT GRAY CLAY (CH)					
	-W/SHELLS AND 1/4" MEDIUM SAND POCKETS					
	SOFT GRAY SILTY CLAY (CH)			34		
-50	SOFT DARK GRAY CLAY (CH)	51	24	44	76	.43
	-W/SHELLS AND 1/16" FINE SAND SEAMS 1/8" APART					
-60	BORING COMPLETED AT 58.0'					

B-9

Elevation	Description	LL	PI	W	DD	SU
0				29		
	GROUNDWATER			24		
	MUDLINE AT 8.5'					
-10	LOOSE GRAY SLIGHTLY SILTY SAND (SM-SP)					
	W/SHELLS					
	-DENSE AT 12.5 TO 14'					
	SOFT DARK GRAY CLAY (CH) W/SHELLS	70	30	55	64	.35
-20	-W/SHELLS					
	-W/SHELLS	50	21	55	56	.19
-30	SOFT TO VERY SOFT DARK CLAY (CH)					
-40	SOFT DARK GRAY CLAY (CH)	58	31	42	74	.42
	SOFT DARK GRAY CLAY (CH)					
	W/1/16" SAND SEAMS			39	75	.72
-50	MEDIUM DARK GRAY CLAY (CH)					
	-W/SILT LENSES AND FINE SAND TRACES					
-60	BORING COMPLETED AT 58.5'					

LEGEND

LL	LIQUID LIMITS (%)
PI	PLASTICITY LIMIT (%)
W	WATER CONTENT (%)
DD	DRY DENSITY (pcf)
SU	UNDRAINED SHEAR STRENGTH (ksf)

SOIL TYPE

- FIRM GRAY SLIGHTLY SILTY SAND (SM-SP)
- VERY SOFT TO SOFT GRAY CLAY (CH)
- SOFT GRAY CLAY (CH)
- LOOSE GRAY SILTY SAND (SM)
- VERY LOOSE GRAY SILT (ML)

"AS-BUILT"

STATE OF LOUISIANA
E.J. GIERING, III
REG. NO. 8033
REGISTERED PROFESSIONAL ENGINEER
IN
CIVIL ENGINEERING

SOIL BORINGS LOGS-B7 THRU B9
RACCOON ISLAND (TE-48)

Approved by E.J. GIERING III Date 06/05
State Conservation Engineer
Alexandria, Louisiana
Title
Title

Designed R. MANUEL 05/05 Date
Drawn G. BURNS 05/05
Traced
Checked C. LAFLEUR 05/05

SOIL BORING LOGS-B7 THRU B9
RACCOON ISLAND PHASE A
(TE-48) SHORELINE PROTECTION
TERREBONNE PARISH, LOUISIANA

U.S. DEPARTMENT OF AGRICULTURE - NATURAL RESOURCES CONSERVATION SERVICE

REVISIONS			
NO.	DATE	APPR.	TITLE

CAD FILENAME
LA350008.DGN
PROJECT NO.
LA 350
SHEET NO 8 OF 19

B-10

DESCRIPTION	LL	PI	W	DD	SU
GROUNDWATER			27		
MUDLINE AT 7.0'					
LOOSE GRAY SILTY SAND (SM) W/SHELLS			32		
-SLIGHTLY SILTY SAND (SM-SP) AT 9.0' TO 10.5'					
-FIRM AT 11.0' TO 12.5'					
SOFT DARK GRAY CLAY (CH) W/SHELLS	81	55	58	63	.28
SOFT TO VERY SOFT DARK GRAY CLAY (CH)					
-W/FINE SAND SEAMS AND SHELL TRACES					
-W/WOOD AT 25.0' TO 27.0'					
	75	44	66	58	.18
VERY SOFT DARK GRAY CLAY (CH)	73	42	62	62	.32
SOFT DARK GRAY CLAY (CH)					
-W/FINE SAND POCKETS AND SEAMS					
	35	10	35	87	.62
MEDIUM GRAY SANDY CLAY (CL)					
-W/SILT SEAMS AND SHELLS					
BORING COMPLETED AT 57.0'					

B-11

DESCRIPTION	LL	PI	W	DD	SU
GROUNDWATER			23		
MUDLINE AT 7.0'					
LOOSE GRAY SILTY SAND (SM) W/SHELLS					
-W/CLAY LAYERS 13.0 TO 14.5'	65	42	47	72	.18
VERY SOFT GRAY CLAY (CH)					
-W/SAND POCKETS AND SEAMS					
	118	74	91	46	.84
MEDIUM GRAY CLAY (CH)					
-W/ORGANICS					
VERY SOFT GRAY SANDY CLAY (CL)	73	49	61	63	.22
-W/SAND POCKETS AND SHELLS					
FIRM GRAY SILT (ML)	58	31	55		
SOFT GRAY CLAY (CH)					
-W/SILT LAYERS AT 55.0' TO 56.6'					
BORING COMPLETED AT 56.5'					

SOIL TYPE

- FIRM GRAY SLIGHTLY SILTY SAND (SM-SP)
- VERY SOFT TO SOFT GRAY CLAY (CH)
- SOFT GRAY CLAY (CH)
- LOOSE GRAY SILTY SAND (SM)
- VERY LOOSE GRAY SILT (ML)

LEGEND

LL	LIQUID LIMITS (%)
PI	PLASTICITY LIMIT (%)
W	WATER CONTENT (%)
DD	DRY DENSITY (pcf)
SU	UNDRAINED SHEAR STRENGTH (ksf)

"AS-BUILT"

STATE OF LOUISIANA
E.J. GIERING, III
REG. NO. 8033
REGISTERED
PROFESSIONAL ENGINEER
IN
CIVIL ENGINEERING

SOIL BORINGS LOGS-B10 & B11
RACCOON ISLAND (TE-48)

Approved by E.J. GIERING, III 06/05
State Conservation Engineer
Alexandria, Louisiana
Title
Date

Designed R. MANUEL 05/05
Drawn G. BURNS 05/05
Traced
Checked D. GARBER 05/05

SOIL BORING LOGS-B10 & B11
RACCOON ISLAND PHASE A
(TE-48) SHORELINE PROTECTION
TERREBONNE PARISH, LOUISIANA

U.S. DEPARTMENT OF AGRICULTURE - NATURAL RESOURCES CONSERVATION SERVICE

NO.	DATE	APPR.	TITLE

REVISIONS

CAD FILENAME
LA350009.DGN

PROJECT NO.
LA 350

SHEET NO 9 OF 19

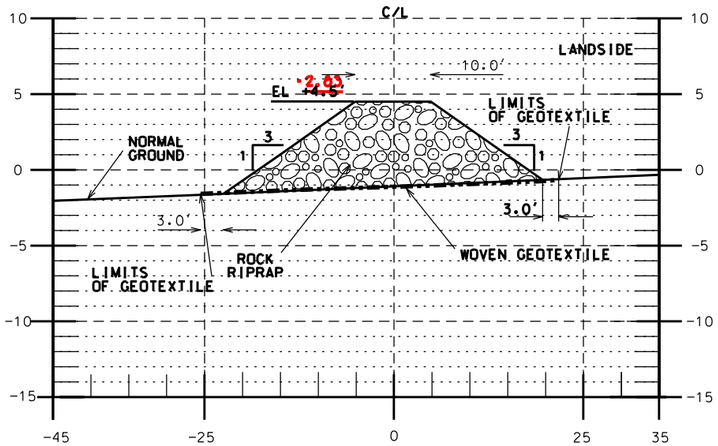

BREAKWATER #8 EAST SECTION

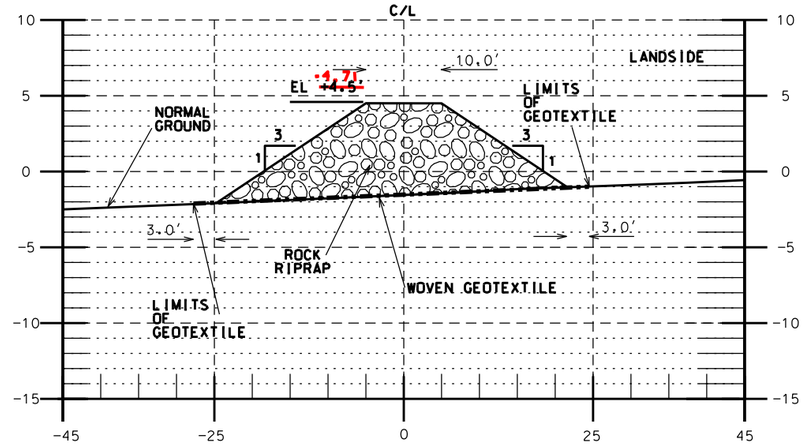

BREAKWATER #8 MID SECTION

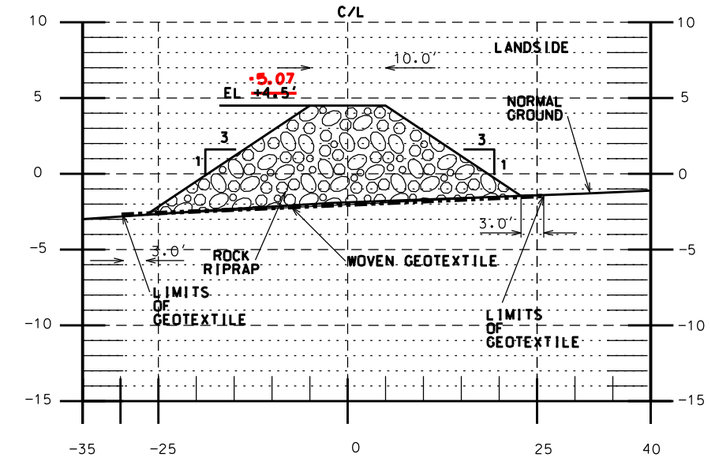

BREAKWATER #8 WEST SECTION

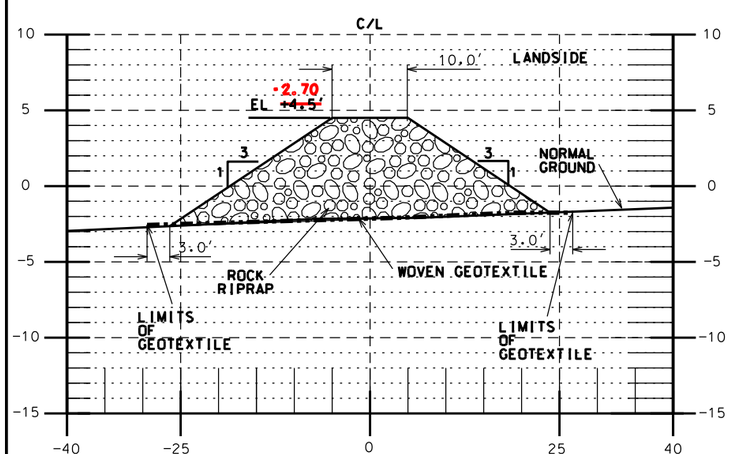

BREAKWATER #9 EAST SECTION

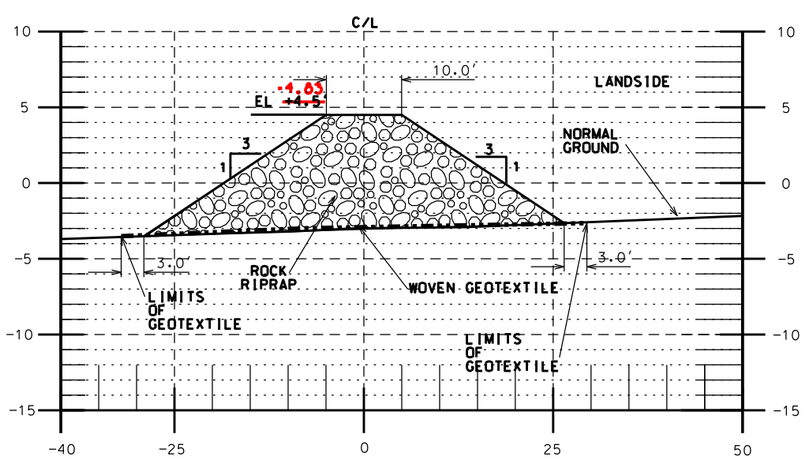

BREAKWATER #9 MID SECTION

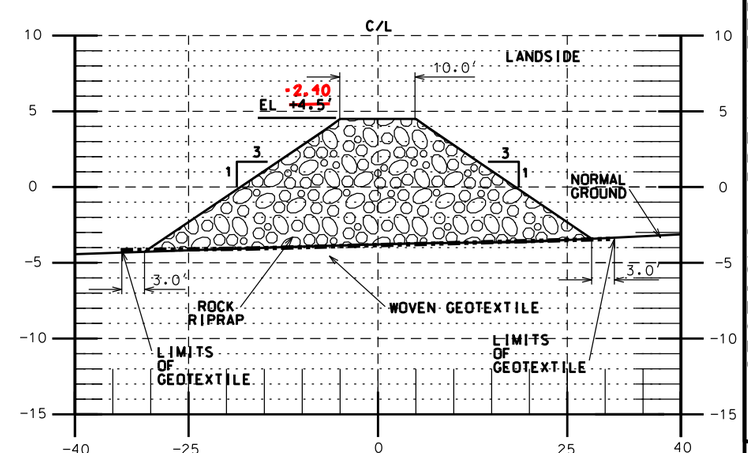

BREAKWATER #9 WEST SECTION

NOTE:
BOTTOM ELEVATIONS MAY CHANGE DUE TO THE DYNAMICS OF THE ENVIRONMENT. X-SECTIONS DERIVED FROM SURVEYS TAKEN IN OCT. OF 2005.

X-SECTIONS- BREAKWATER #8 & #9
RACCOON ISLAND (TE-48)

MOD #1- TOPO CHANGE

"AS-BUILT"

STATE OF LOUISIANA
E.J. GIERING, III
REG. NO. 8033
REGISTERED PROFESSIONAL ENGINEER
IN
CIVIL ENGINEERING

Date	
Approved by E.J. GIERING III	06/05
Title State Conservation Engineer Alexandria, Louisiana	
Title	

		Date
Designed	R. MANUEL	05/05
Drawn	G. BURNS	05/05
Traced		
Checked	R. FAULKNER	06/05

X-SECTIONS- BREAKWATER #8 & #9
RACCOON ISLAND PHASE A
(TE-48) SHORELINE PROTECTION
TERREBONNE PARISH, LOUISIANA

U.S. DEPARTMENT OF AGRICULTURE - NATURAL RESOURCES CONSERVATION SERVICE

REVISIONS			
NO.	DATE	APPR.	TITLE
M1	11/05	B.A.S.	A.S.C.E.

CAD FILENAME
LA350010M1.DGN

PROJECT NO.
LA350

SHEET NO 10M1 OF 19

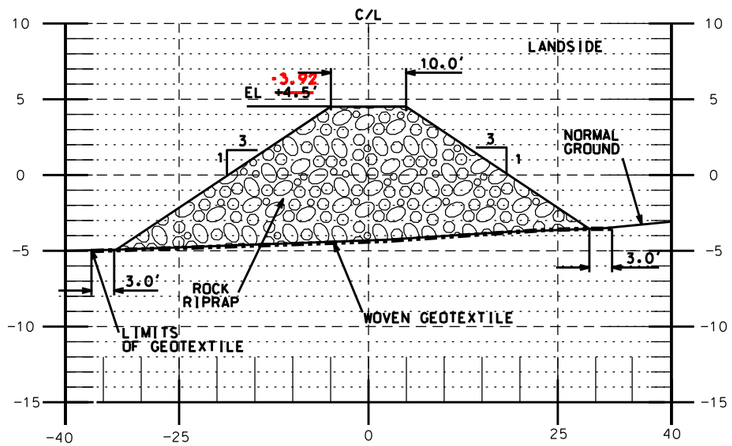

BREAKWATER #10 EAST SECTION

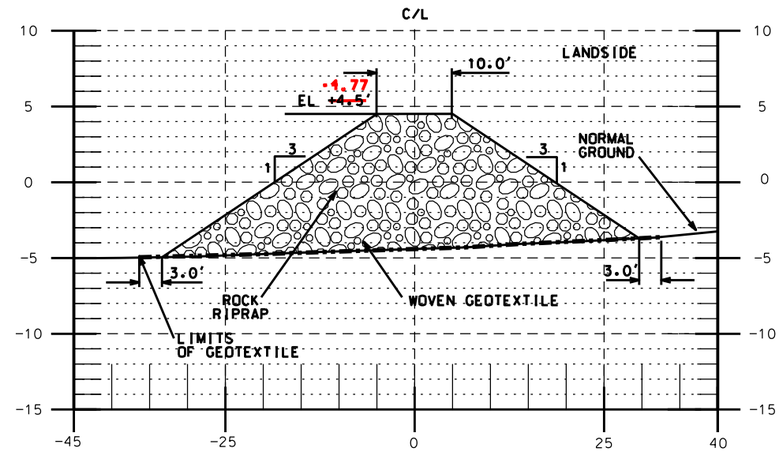

BREAKWATER #10 MID SECTION

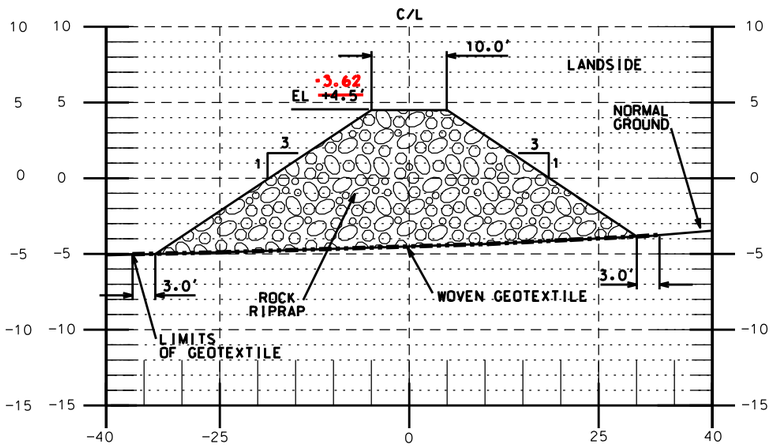

BREAKWATER #10 WEST SECTION

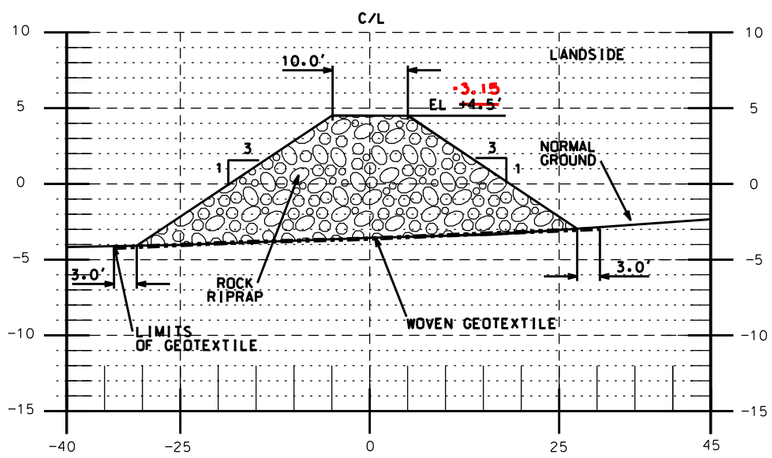

BREAKWATER #11 EAST SECTION

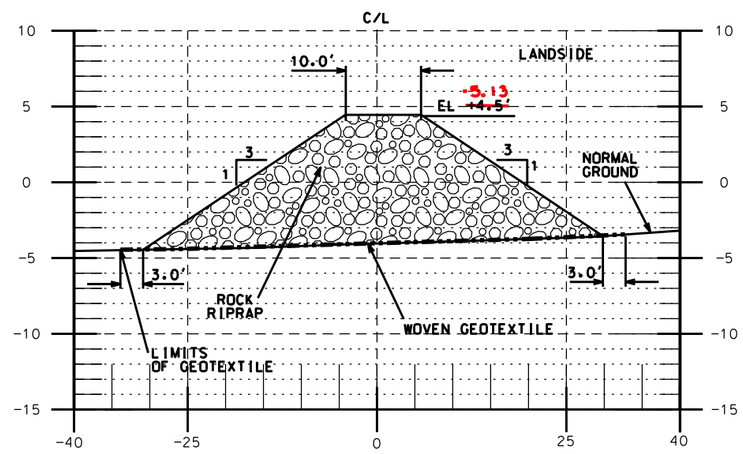

BREAKWATER #11 MID SECTION

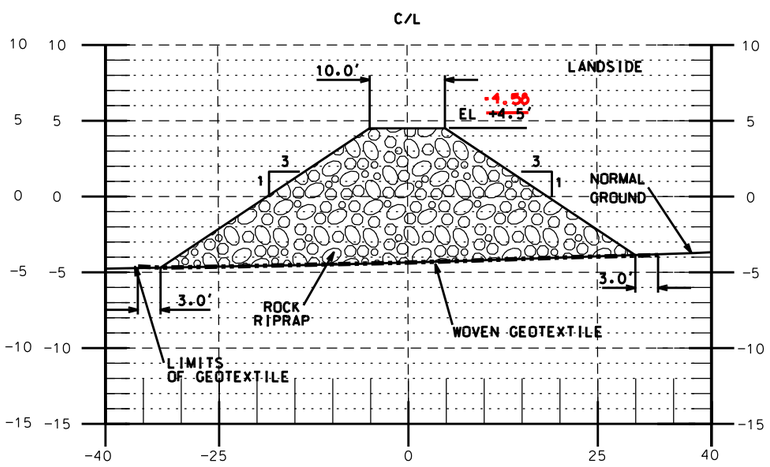

BREAKWATER #11 WEST SECTION

X-SECTIONS- BREAKWATER #10 & #11
RACCOON ISLAND (TE-48)

"AS-BUILT"

NOTE:
BOTTOM ELEVATIONS MAY CHANGE DUE TO THE DYNAMICS OF THE ENVIRONMENT. X-SECTIONS DERIVED FROM SURVEYS TAKEN IN OCT. OF 2005.

MOD #1- TOPO CHANGE

STATE OF LOUISIANA
E.J. GIERING, III
REG. NO. 8033
REGISTERED PROFESSIONAL ENGINEER
IN
CIVIL ENGINEERING

Date
Approved by E.J. GIERING III 06/05
Title State Conservation Engineer
Alexandria, Louisiana
Title

Date
Designed R. MANUEL 05/05
Drawn G. BURNS 05/05
Traced
Checked R. FAULKNER 05/05

X-SECTIONS- BREAKWATER #10 & #11
RACCOON ISLAND PHASE A
(TE-48) SHORELINE PROTECTION
TERREBONNE PARISH, LOUISIANA

U.S. DEPARTMENT OF AGRICULTURE - NATURAL RESOURCES CONSERVATION SERVICE

REVISIONS

NO.	DATE	APPR.	TITLE
M1	11/05	B.A.S.	A.S.C.E.

CAD FILENAME
LA350011M1.DGN
PROJECT NO.
LA350
SHEET NO 11M1 OF 19

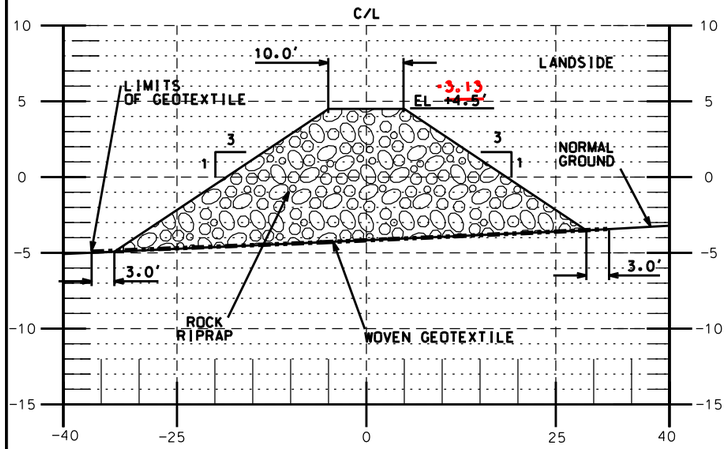

BREAKWATER #12 EAST SECTION

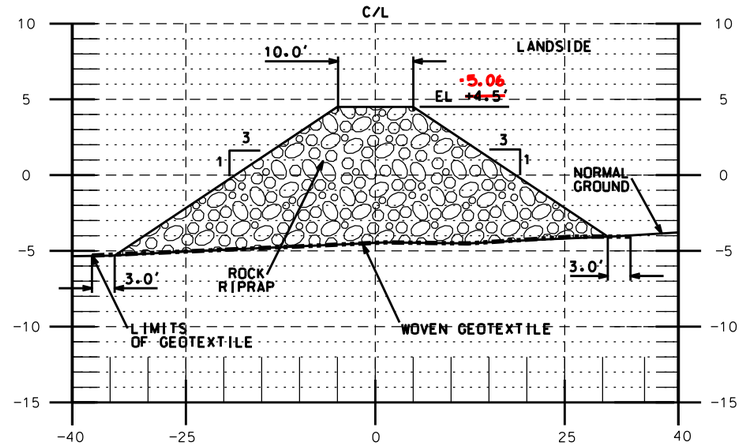

BREAKWATER #12 MID SECTION

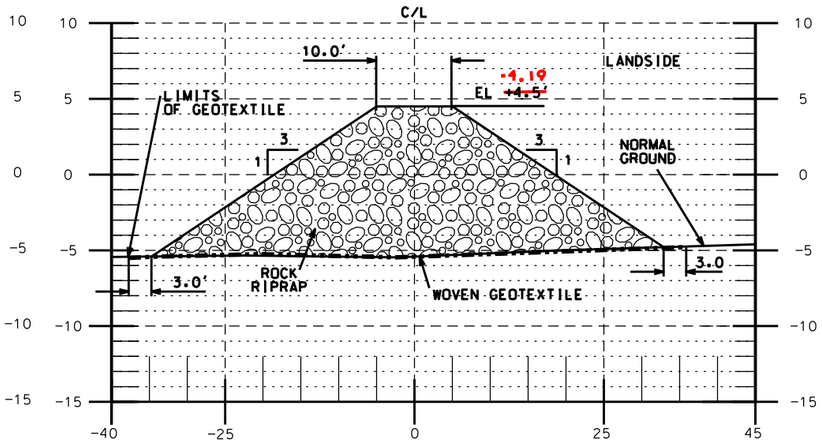

BREAKWATER #12 WEST SECTION

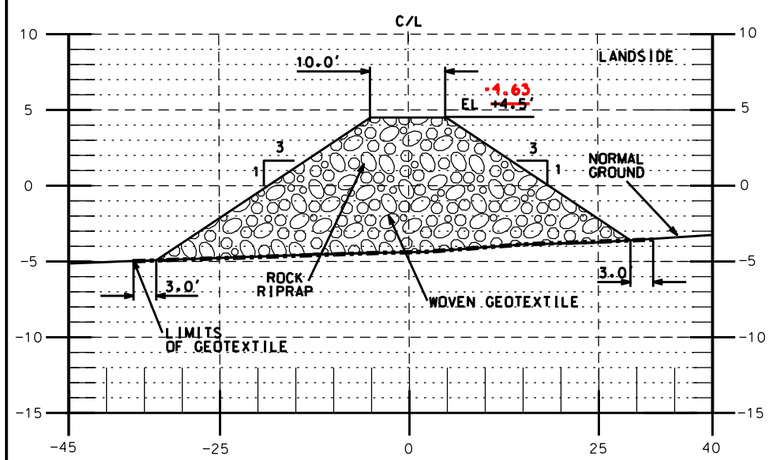

BREAKWATER #13 EAST SECTION

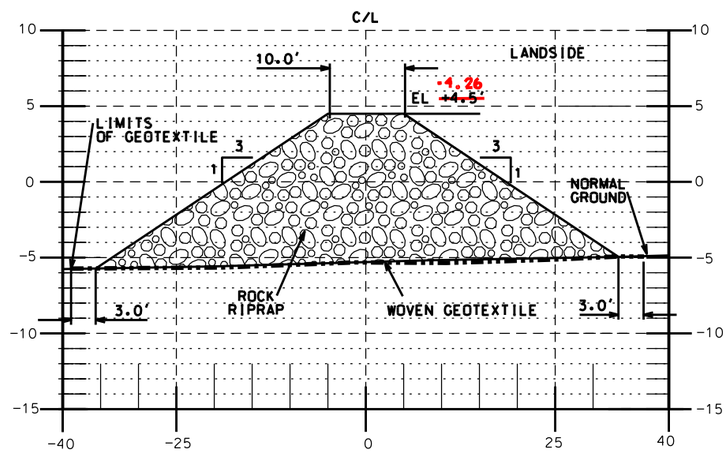

BREAKWATER #13 MID SECTION

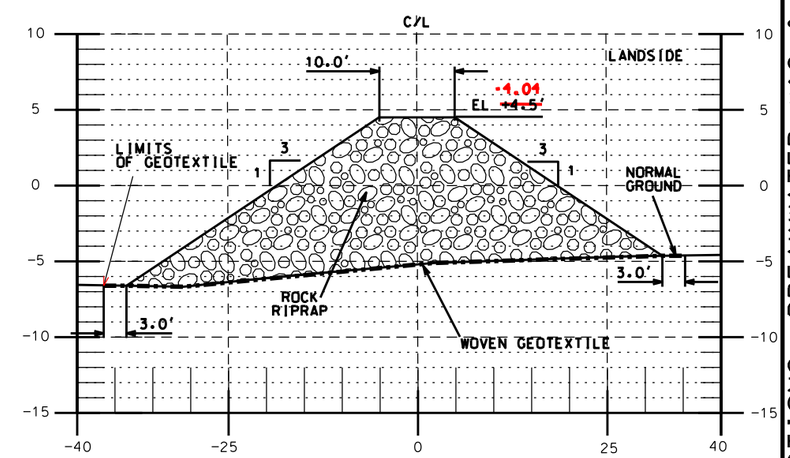

BREAKWATER #13 WEST SECTION

X-SECTIONS- BREAKWATER #12 & #13
RACCOON ISLAND (TE-48)

"AS-BUILT"

NOTE:
BOTTOM ELEVATIONS MAY CHANGE DUE TO THE DYNAMICS OF THE ENVIRONMENT. X-SECTIONS DERIVED FROM SURVEYS TAKEN IN OCT. OF 2005.

MOD #1- TOPO CHANGE

STATE OF LOUISIANA
E.J. GIERING, III
REG. NO. 8033
REGISTERED PROFESSIONAL ENGINEER
IN
CIVIL ENGINEERING

Approved by E.J. GIERING III 06/05
Title State Conservation Engineer
Alexandria, Louisiana
Title
Date

Designed R. MANUEL 05/05
Drawn G. BURNS 05/05
Traced
Checked R. FAULKNER 05/05

X-SECTIONS- BREAKWATER #12 & #13
RACCOON ISLAND PHASE A
(TE-48) SHORELINE PROTECTION
TERREBONNE PARISH, LOUISIANA

U.S. DEPARTMENT OF AGRICULTURE - NATURAL RESOURCES CONSERVATION SERVICE

REVISIONS

NO.	DATE	APPR.	TITLE
M1	11/05	B.A.S.	A.S.C.E.

CAD FILENAME
LA350012M1.DGN
PROJECT NO.
LA350
SHEET NO 12M1 OF 19

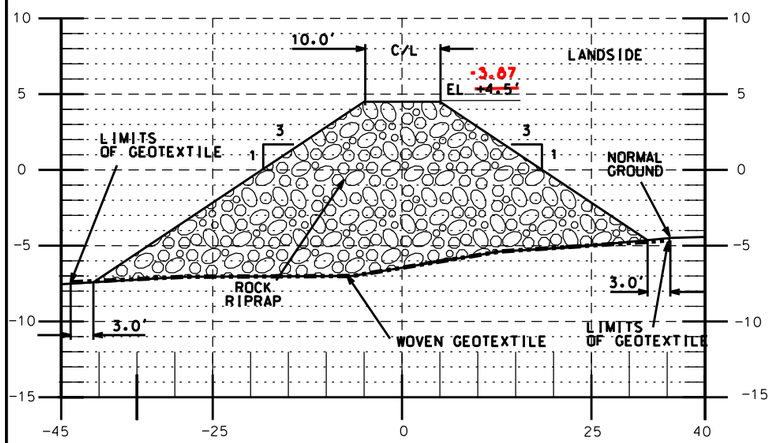

BREAKWATER #14 EAST SECTION

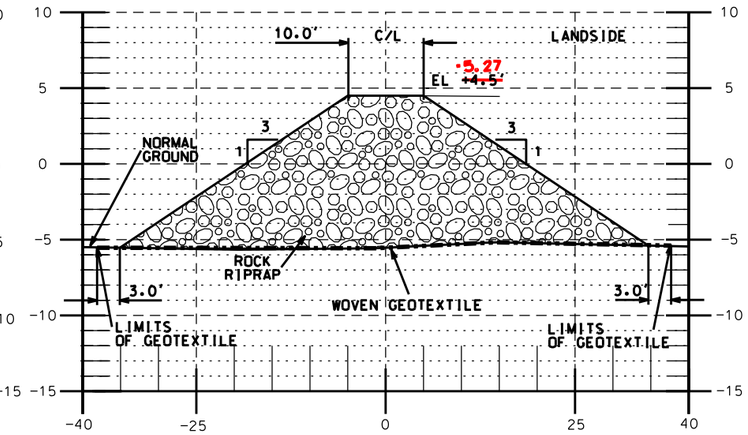

BREAKWATER #14 MID SECTION

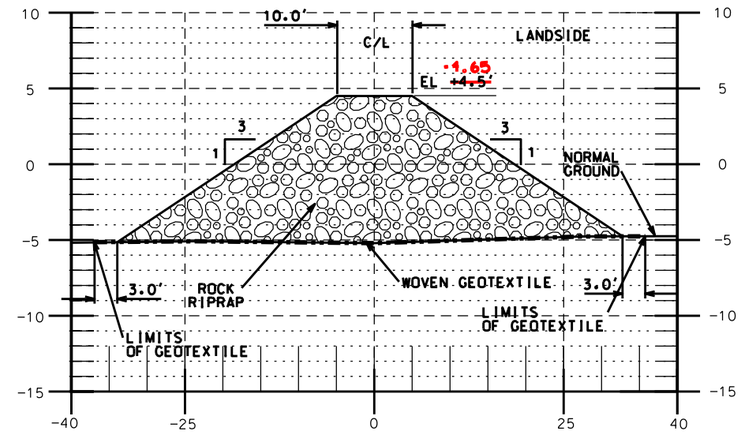

BREAKWATER #14 WEST SECTION

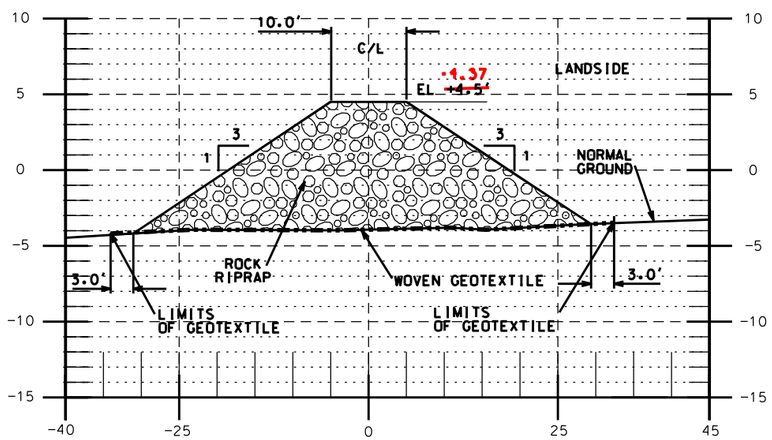

BREAKWATER #15 EAST SECTION

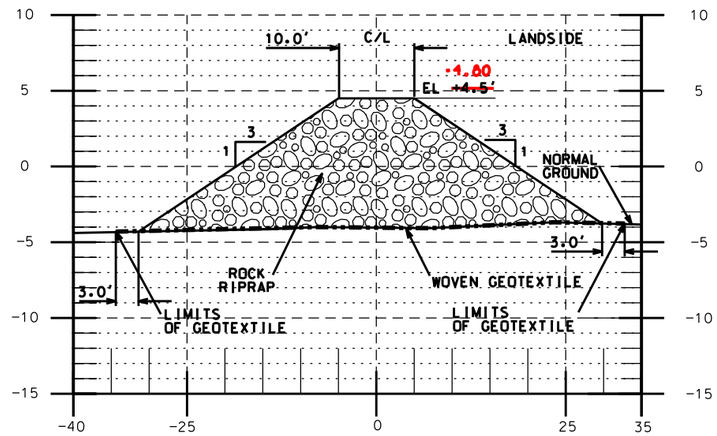

BREAKWATER #15 MID SECTION

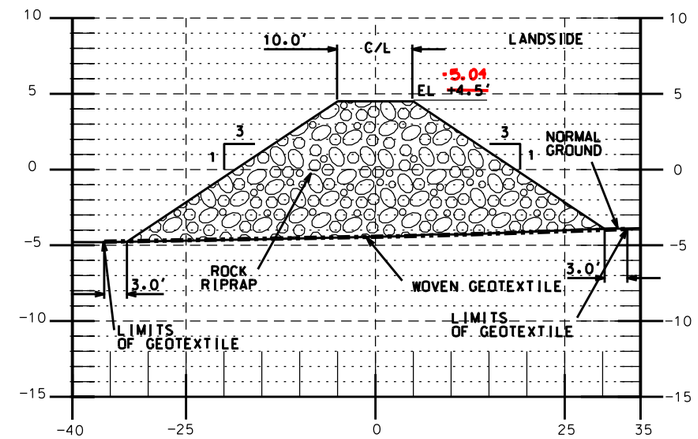

BREAKWATER #15 WEST SECTION

X-SECTIONS- BREAKWATER #14 & #15
RACCOON ISLAND (TE-48)

"AS-BUILT"

NOTE:
BOTTOM ELEVATIONS MAY CHANGE DUE TO THE DYNAMICS OF THE ENVIRONMENT. X-SECTIONS DERIVED FROM SURVEYS TAKEN IN OCT. OF 2005.

MOD #1- TOPO CHANGE

STATE OF LOUISIANA
E.J. GIERING, III
REG. NO. 8033
REGISTERED PROFESSIONAL ENGINEER
IN
CIVIL ENGINEERING

Date
Approved by E.J. GIERING III 06/05
Title State Conservation Engineer
Alexandria, Louisiana
Title

Date
Designed R. MANUEL 05/05
Drawn G. BURNS 05/05
Traced
Checked R. FAULKNER 05/05

X-SECTIONS- BREAKWATER #14 & #15
RACCOON ISLAND PHASE A
(TE-48) SHORELINE PROTECTION
TERREBONNE PARISH, LOUISIANA

U.S. DEPARTMENT OF AGRICULTURE - NATURAL RESOURCES CONSERVATION SERVICE

REVISIONS

NO.	DATE	APPR.	TITLE
M1	11/05	B.A.S.	A.S.C.E.

CAD FILENAME
LA350013M1.DGN
PROJECT NO.
LA350
SHEET NO 13M1 OF 19

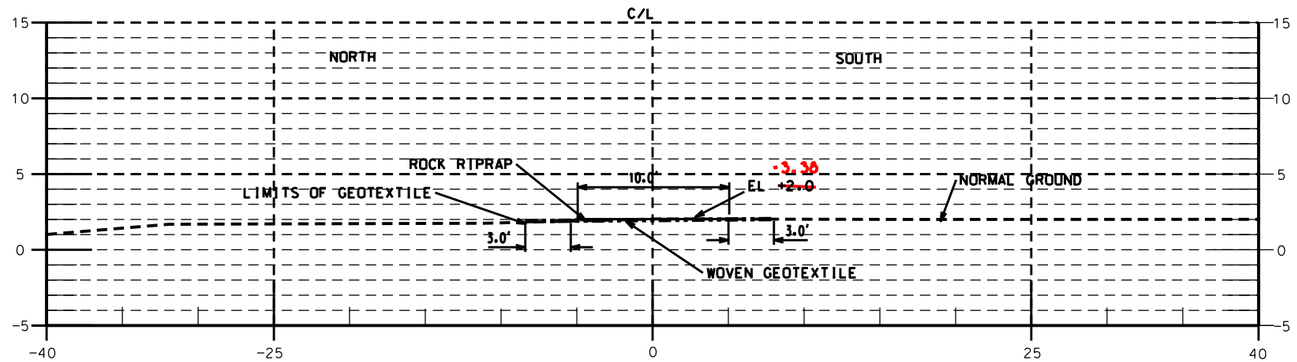

EAST GROIN SECTION
STATION 0+00

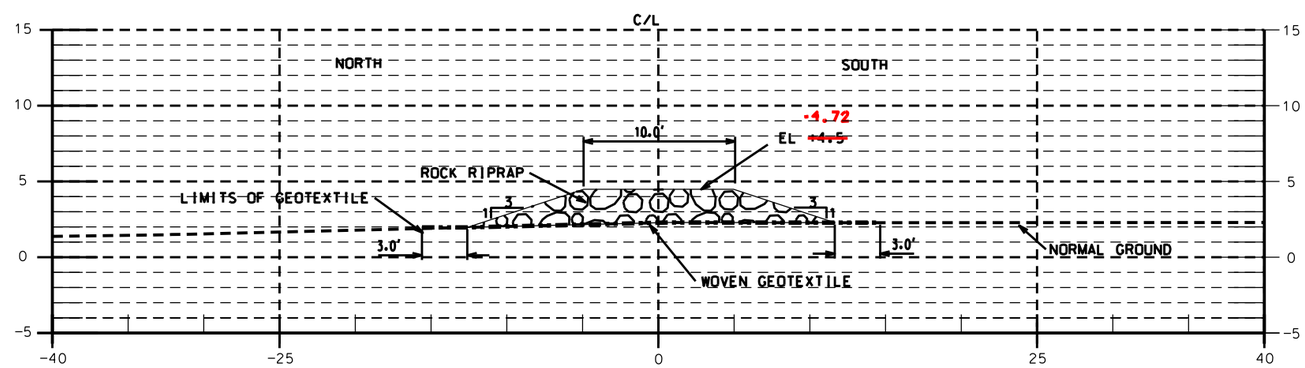

EAST GROIN SECTION
STATION 0+08

"AS-BUILT"

NOTE:
BOTTOM ELEVATIONS MAY CHANGE DUE TO THE DYNAMICS OF THE ENVIRONMENT. X-SECTIONS DERIVED FROM SURVEYS TAKEN IN OCT. OF 2005.

MOD #1- TOPO CHANGE

STATE OF LOUISIANA
E.J. GIERING, III
REG. NO. 8033
REGISTERED
PROFESSIONAL ENGINEER
IN
CIVIL ENGINEERING

Approved by E.J. GIERING III 06/05
Title State Conservation Engineer
Alexandria, Louisiana
Date

Designed R. MANUEL 05/05
Drawn G. BURNS 05/05
Traced
Checked R. FAULKNER 05/05
Title

SECTIONS-EAST GROIN
STATION 0+00-0+80
RACCOON ISLAND PHASE A SHORELINE PROTECTION
TERREBONNE PARISH, LOUISIANA

U.S. DEPARTMENT OF AGRICULTURE - NATURAL RESOURCES CONSERVATION SERVICE

REVISIONS			
NO.	DATE	APPR.	TITLE
M1	11/05	B.A.S.	A.S.C.E.

CAD FILENAME
LA350014M1.DGN

PROJECT NO.
LA350

SHEET NO 14M1 OF 19

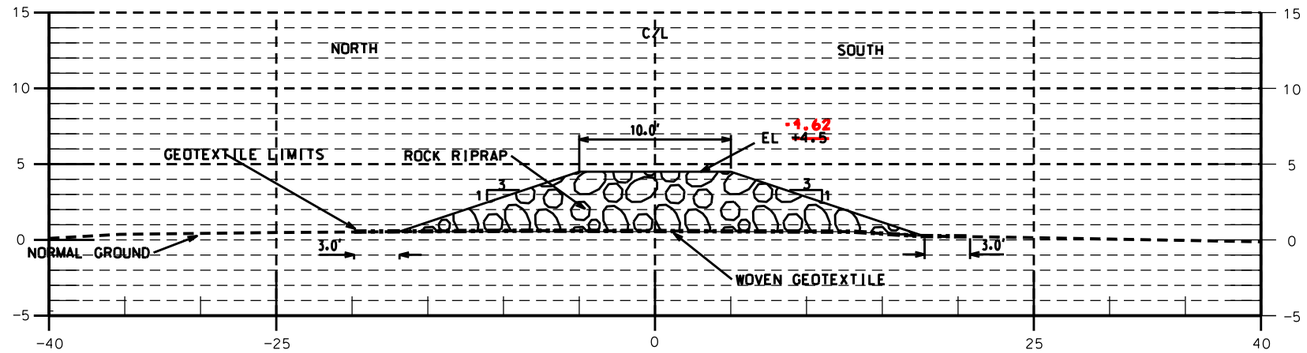

EAST GROIN SECTION
STATION ~~1+00~~ 1+10

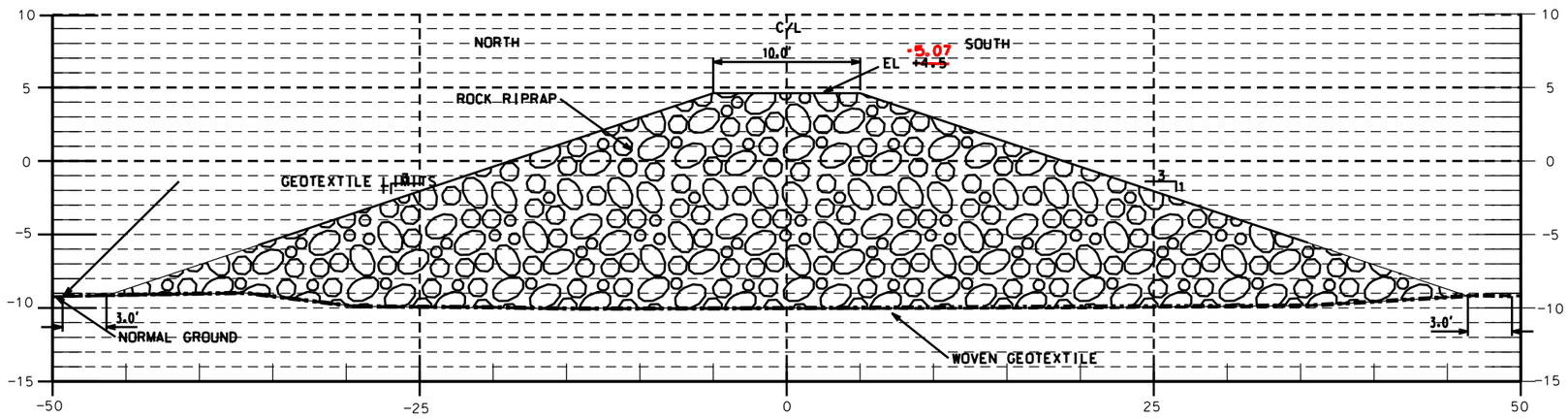

EAST GROIN SECTION
STATION 2+00

"AS-BUILT"

NOTE:
BOTTOM ELEVATIONS MAY CHANGE DUE TO THE DYNAMICS OF THE ENVIRONMENT. X-SECTIONS DERIVED FROM SURVEYS TAKEN IN JULY OF 2004.

MOD #1- TOPO CHANGE

STATE OF LOUISIANA
E.J. GIERING, III
REG. NO. 8033
REGISTERED
PROFESSIONAL ENGINEER
IN
CIVIL ENGINEERING

Date
Approved by E.J. GIERING III 05/06
Title State Conservation Engineer
Alexandria, Louisiana
Title

Date
Designed R. MANUEL 05/05
Drawn G. BURNS 05/05
Traced
Checked R. FAULKNER 05/05

SECTIONS-EAST GROIN
STATION 1+00-2+00
RACCOON ISLAND PHASE A SHORELINE PROTECTION
TERREBONNE PARISH, LOUISIANA

U.S. DEPARTMENT OF AGRICULTURE - NATURAL RESOURCES CONSERVATION SERVICE

REVISIONS

NO.	DATE	APPR.	TITLE
M1	11/05	B.A.S.	A.S.C.E.

CAD FILENAME
LA350015M1.DGN
PROJECT NO.
LA350
SHEET NO 15M1 OF 19

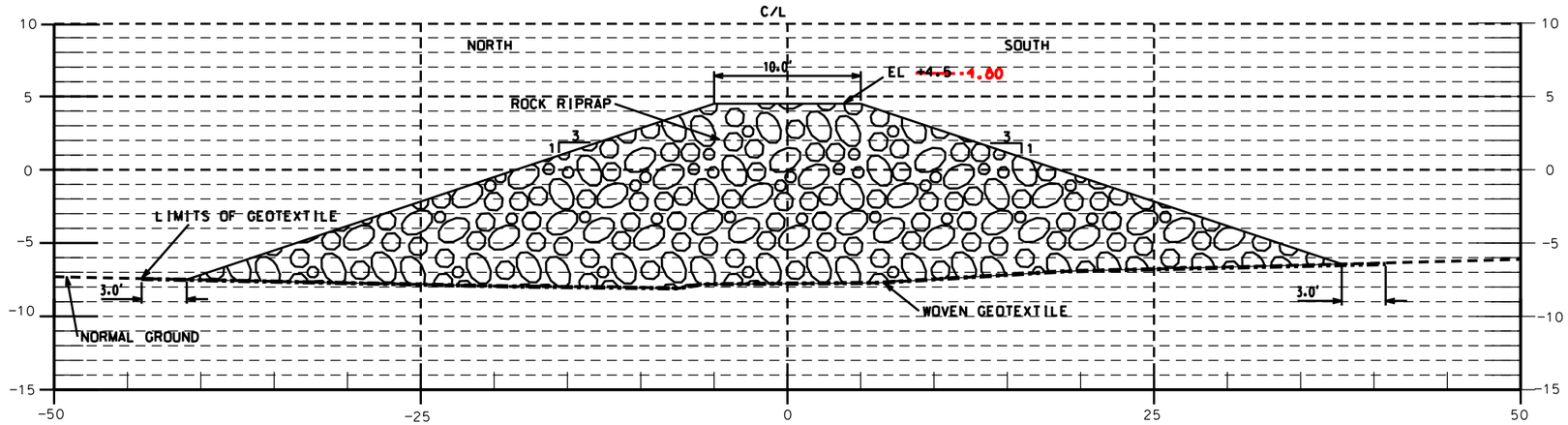

EAST GROIN SECTION
STATION ~~3+00~~ 3+02

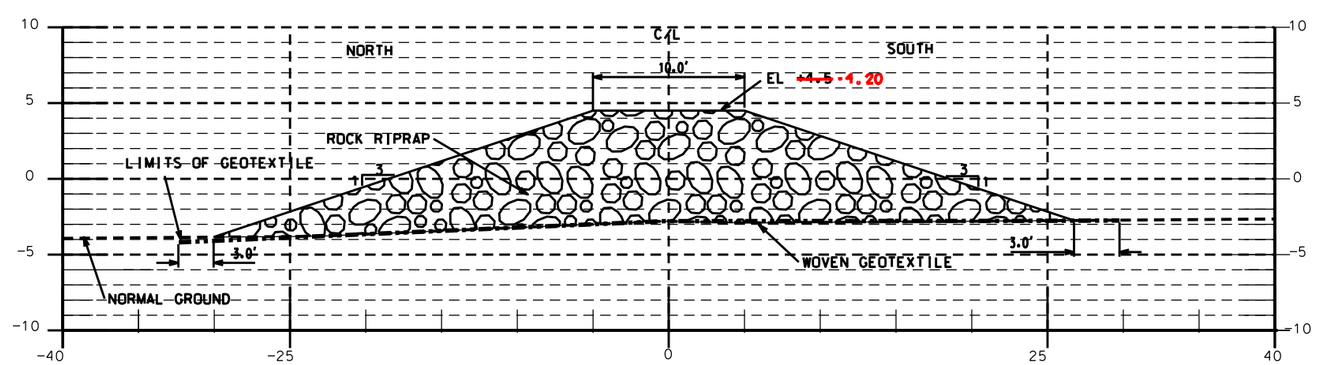

EAST GROIN SECTION
STATION ~~4+00~~ 4+06

NOTE:
BOTTOM ELEVATIONS MAY CHANGE DUE TO THE DYNAMICS OF THE ENVIRONMENT. X-SECTIONS DERIVED FROM SURVEYS TAKEN IN OCT. OF 2005.

MOD #1- TOPO CHANGE

"AS-BUILT"

STATE OF LOUISIANA
E.J. GIERING, III
REG. NO. 8033
REGISTERED
PROFESSIONAL ENGINEER
IN
CIVIL ENGINEERING

Date
Approved by E.J. GIERING III 06/05
Title State Conservation Engineer
Alexandria, Louisiana
Title

Date
Designed R. MANUEL 05/05
Drawn G. BURNS 05/05
Traced
Checked R. FAULKNER 05/05

SECTIONS-EAST GROIN
STATION 3+00-4+00
RACCOON ISLAND PHASE A SHORELINE PROTECTION
TERREBONNE PARISH, LOUISIANA

U.S. DEPARTMENT OF AGRICULTURE - NATURAL RESOURCES CONSERVATION SERVICE

REVISIONS

NO.	DATE	APPR.	TITLE
M1	11/05	B.A.S.	A.S.C.E.

CAD FILENAME
LA350016M1.DGN
PROJECT NO.
LA350
SHEET NO 16M1 OF 19

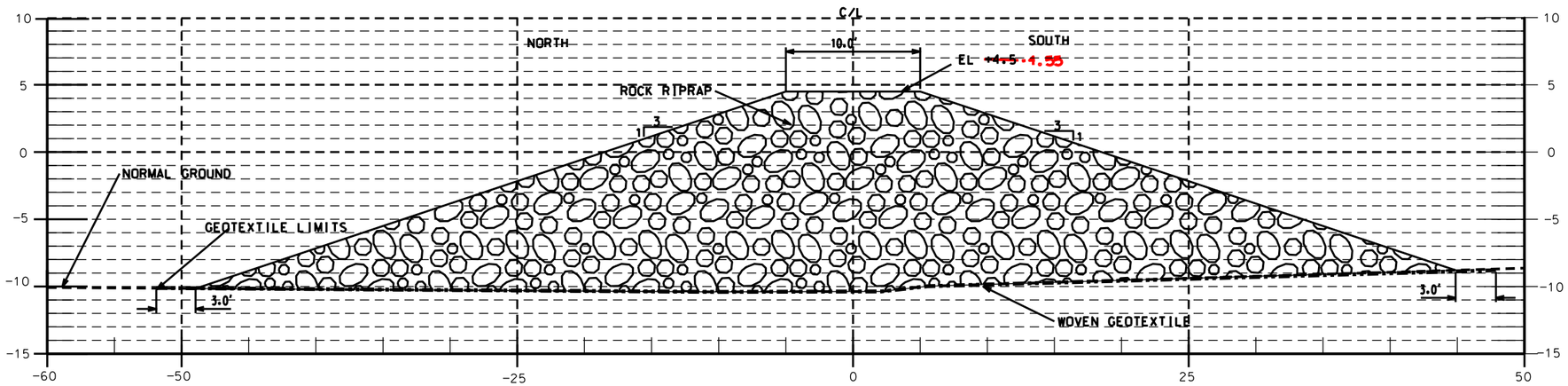

EAST GROIN SECTION
STATION 5+00

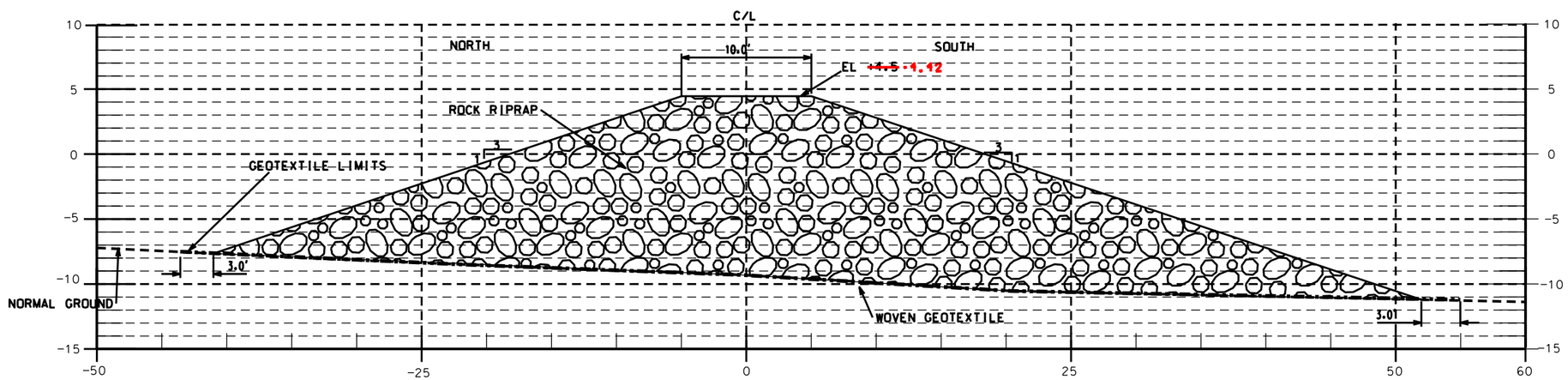

EAST GROIN SECTION
STATION ~~6+00~~ 6+04

NOTE:
BOTTOM ELEVATIONS MAY CHANGE DUE TO THE DYNAMICS OF THE ENVIRONMENT. X-SECTIONS DERIVED FROM SURVEYS TAKEN IN OCT. OF 2005.

MOD #1 – TOPO CHANGE

"AS-BUILT"

STATE OF LOUISIANA
E.J. GIERING, III
REG. NO. 8033
REGISTERED
PROFESSIONAL ENGINEER
IN
CIVIL ENGINEERING

Date	
Approved by E.J. GIERING, III	06/05
Title State Conservation Engineer Alexandria, Louisiana	
Title	

		Date
Designed	R. MANUEL	05/05
Drawn	G. BURNS	05/05
Traced		
Checked	R. FAULKNER	05/05

SECTIONS-EAST GROIN
STATION 5+00-6+00
RACCOON ISLAND PHASE A SHORELINE PROTECTION
TERREBONNE PARISH, LOUISIANA

U.S. DEPARTMENT OF AGRICULTURE - NATURAL RESOURCES CONSERVATION SERVICE

REVISIONS			
NO.	DATE	APPR.	TITLE
M1	11/05	B.A.S.	A.S.C.E.

CAD FILENAME
LA350017M1.DGN

PROJECT NO.
LA350

SHEET NO 17M1 OF 19

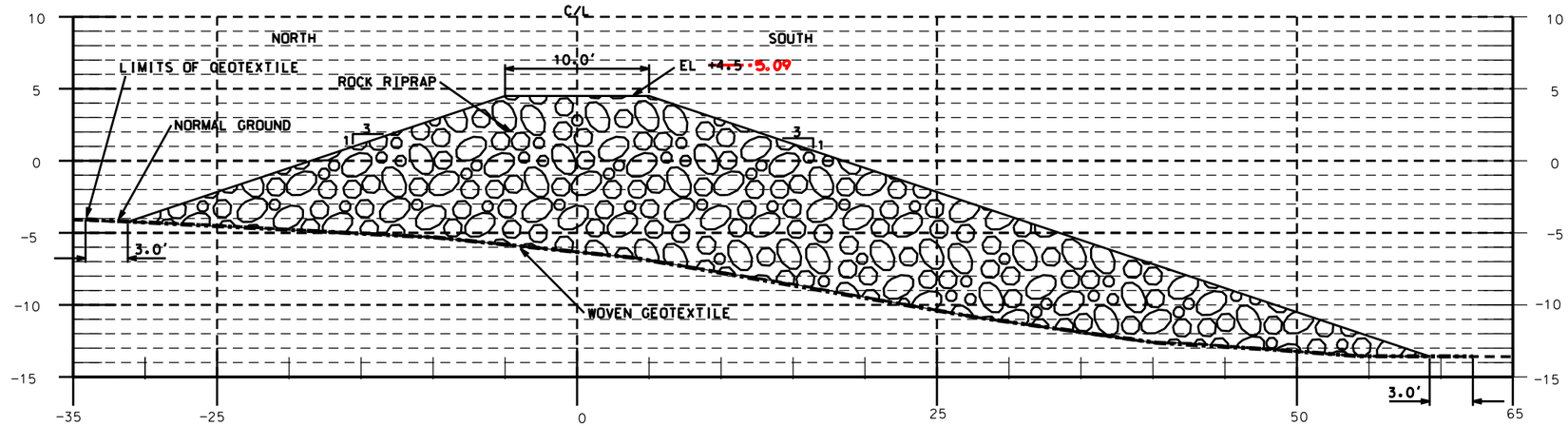

EAST GROIN SECTION
STATION ~~7+00~~ 7+03

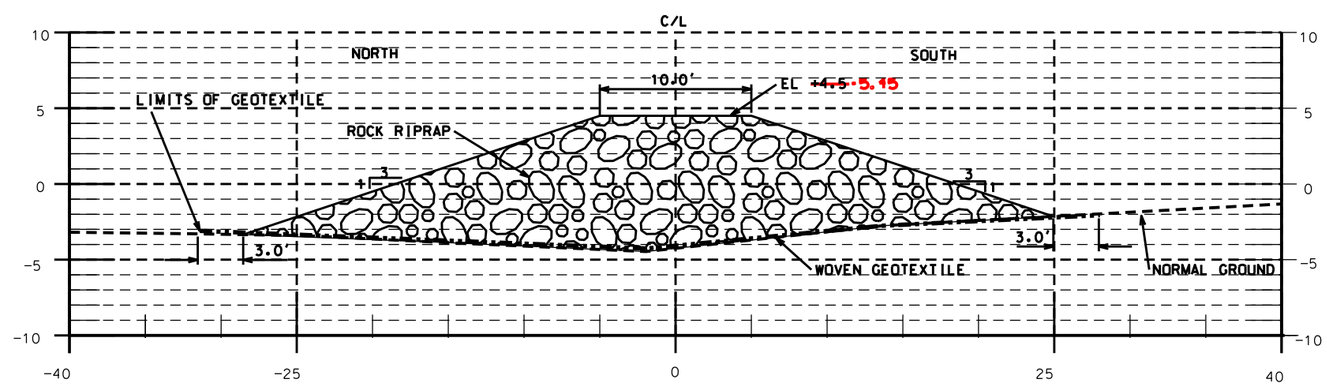

EAST GROIN SECTION
STATION ~~8+00~~ 8+08

"AS-BUILT"

NOTE:
BOTTOM ELEVATIONS MAY CHANGE DUE TO THE DYNAMICS OF THE ENVIRONMENT. X-SECTIONS DERIVED FROM SURVEYS TAKEN IN OCT. OF 2005.

MOD #1- TOPO CHANGE

STATE OF LOUISIANA
E.J. GIERING, III
REG.NO.8033
REGISTERED PROFESSIONAL ENGINEER
IN
CIVIL ENGINEERING

	Date
Approved by E.J. GIERING, III	06/05
Title State Conservation Engineer Alexandria, Louisiana	
Title	

		Date
Designed	R. MANUEL	05/05
Drawn	G. BURNS	05/05
Traced		
Checked	R. FAULKNER	05/05

SECTIONS-EAST GROIN
STATION 7+00-8+00
RACCOON ISLAND PHASE A SHORELINE PROTECTION
TERREBONNE PARISH, LOUISIANA

U.S. DEPARTMENT OF AGRICULTURE - NATURAL RESOURCES CONSERVATION SERVICE

REVISIONS

NO.	DATE	APPR.	TITLE
M1	11/05	B.A.S.	A.S.C.E.

CAD FILENAME
LA350018M1.DGN

PROJECT NO.
LA350

SHEET NO 18M1 OF 19

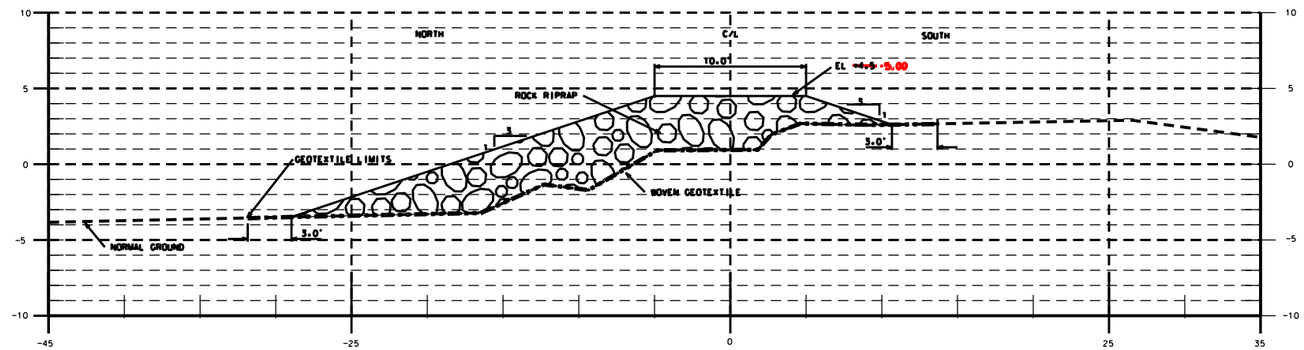

EAST GROIN SECTION
STATION ~~9+00~~ 9+05

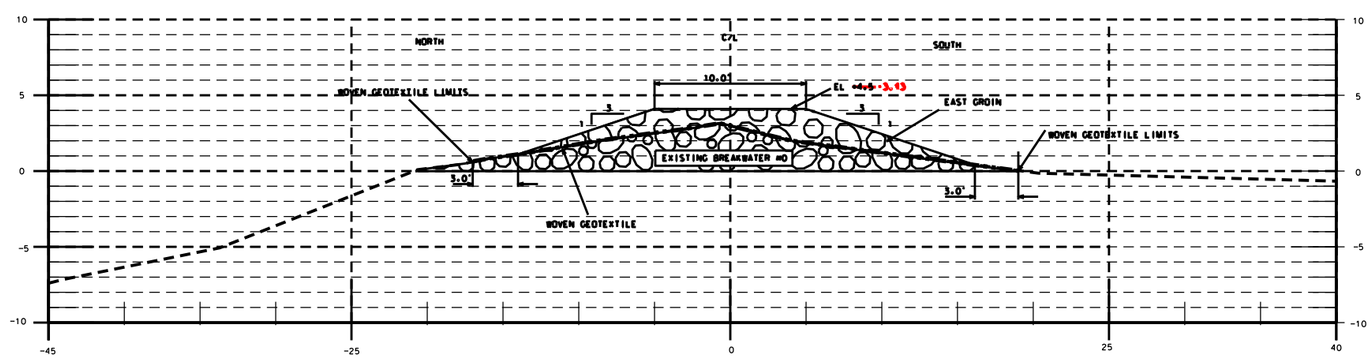

EAST GROIN SECTION
STATION 9+26

NOTE:
BOTTOM ELEVATIONS MAY CHANGE DUE TO THE DYNAMICS OF THE ENVIRONMENT. X-SECTIONS DERIVED FROM SURVEYS TAKEN IN OCT. OF 2005.

MOD #1- TOPO CHANGE

"AS-BUILT"

STATE OF LOUISIANA
E.J. GIERING, III
REG. NO. 8033
REGISTERED
PROFESSIONAL ENGINEER
IN
CIVIL ENGINEERING

Approved by E.J. GIERING III 06/05
Title State Conservation Engineer
Alexandria, Louisiana
Title
Date

Designed R. MANUEL 05/05
Drawn G. BURNS 05/05
Traced
Checked R. FAULKNER 05/05
Date

SECTIONS-EAST GROIN
STATION 9+00-9+26
RACCOON ISLAND PHASE A SHORELINE PROTECTION
TERREBONNE PARISH, LOUISIANA

U.S. DEPARTMENT OF AGRICULTURE - NATURAL RESOURCES CONSERVATION SERVICE

REVISIONS

NO.	DATE	APPR.	TITLE
M1	11/05	B.A.S.	A.S.C.E.

CAD FILENAME
LA350019M1.DGN
PROJECT NO.
LA350
SHEET NO 19M1 OF 19