STATE OF LOUISIANA
DEPARTMENT OF NATURAL RESOURCES
COASTAL ENGINEERING DIVISION

MISSISSIPPI RIVER SEDIMENT DELIVERY SYSTEM
BAYOU DUPONT
BA-39
JEFFERSON & PLAQUEMINES PARISHES, LOUISIANA

INDEX TO SHEETS

SHEET NO.	DESCRIPTION
1	TITLE SHEET
2	GENERAL NOTES
3	PROJECT LAYOUT
4	CONSTRUCTION LIMITS
5	BORROW AREA LAYOUT
6	DREDGE PIPELINE CORRIDOR LAYOUT
7	DREDGE PIPELINE CORRIDOR - DETAIL B
8	MARSH CREATION AREA LAYOUT
9	GRADE STAKE LAYOUT
10-11	TYPICAL SECTIONS
12	EARTHEN CONTAINMENT DETAILS
13	RAILROAD & HIGHWAY CROSSING DETAILS
14	MISSISSIPPI RIVER LEVEE CROSSING DETAILS
15	MISSISSIPPI RIVER LEVEE INSPECTION ROAD CROSSING DETAILS
16	FLOOD PROTECTION LEVEE CROSSING DETAILS
17	CASING PIPE CAP AND MARKER DETAILS
18	SETTLEMENT PLATE AND GRADE STAKE DETAILS
19	SURVEY LAYOUT
20	BORROW AREA SECTIONS
21-24	FILL AREA SECTIONS

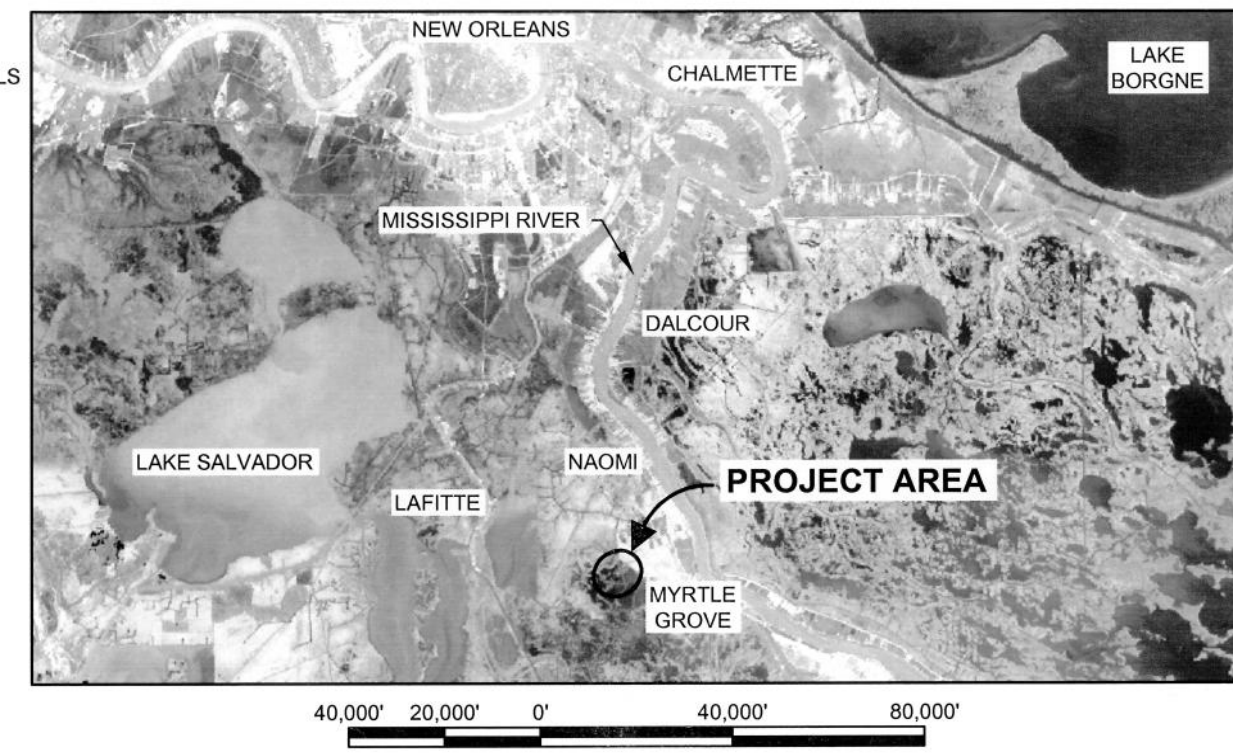

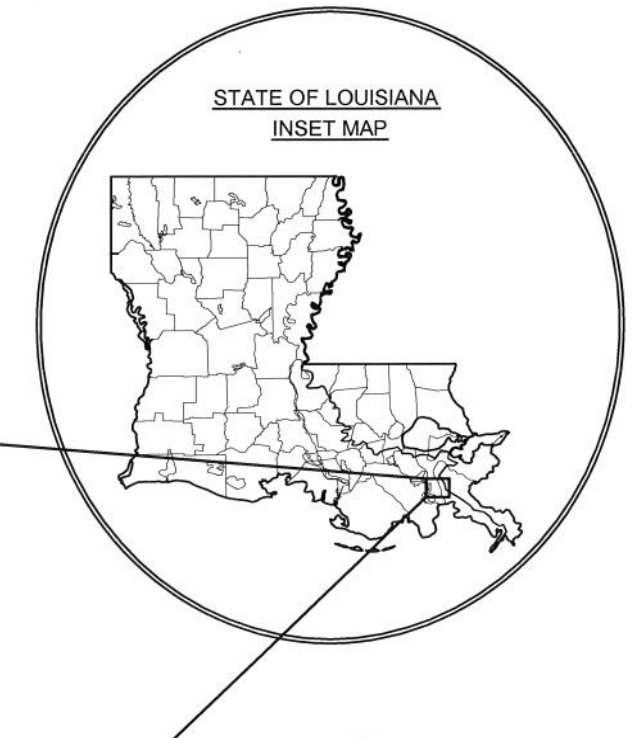

STATE OF LOUISIANA
RUSS J. JOFFRION
License No. 27661
PROFESSIONAL ENGINEER
IN
CIVIL ENGINEERING
8.11.08

FEDERAL PROJECT SPONSOR

STATE PROJECT SPONSOR

CED DIRECTOR - CHRISTOPHER P. KNOTTS, P.E.

CED ENGINEER MANAGER - LUKE E. LEBAS, P.E.

CED PROJECT ENGINEER - WHITNEY C. THOMPSON, E.I.

TYPE OF CONSTRUCTION

CLASSIFICATION III (HEAVY CONSTRUCTION)
MARSH CREATION/HYDRAULIC DREDGING

REV.	DATE	DESCRIPTION	BY

LOUISIANA DEPARTMENT OF NATURAL RESOURCES
COASTAL ENGINEERING DIVISION
617 NORTH 3RD STREET
BATON ROUGE, LOUISIANA 70802

DRAWN BY: KRISTI CANTU | DESIGNED BY: WHITNEY THOMPSON

MISSISSIPPI RIVER SEDIMENT DELIVERY SYSTEM - BAYOU DUPONT

STATE PROJECT NUMBER: BA-39

FEDERAL PROJECT NUMBER: BA-39

APPROVED BY: LUKE LEBAS, P.E.

TITLE SHEET

DATE: AUGUST 2008

SHEET 1 OF 24

GENERAL NOTES

1. ALL ELEVATIONS ARE GIVEN IN THE NORTH AMERICAN VERTICAL DATUM OF 1988 (NAVD 88) U.S. SURVEY FEET. ALL HORIZONTAL COORDINATES ARE GIVEN IN THE NORTH AMERICAN DATUM OF 1983 (NAD 83, LOUISIANA STATE PLANE SOUTH ZONE U.S. FEET). ALL MARSH CREATION AREA ELEVATIONS ARE BASED ON LOUISIANA DEPARTMENT OF NATURAL RESOURCES (LDNR) SECONDARY MONUMENT BA03C-SM-02. SECTION B-B' IS BASED ON LDNR SECONDARY MONUMENT BA03C-SM-01. SEE APPENDIX E OF THE SPECIFICATIONS FOR SURVEY MONUMENT DATA SHEETS.

SECONDARY MONUMENT	ELEVATION	NORTHING	EASTING
BA03C-SM-01	2.80'	438,782.62	3,708,237.23
BA03C-SM-02	-0.67'	423,541.03	3,701,364.99

2. FILL AREA ELEVATIONS SHOWN ON THE PLANS ARE BASED ON THE SURVEYS PERFORMED IN FEBRUARY 2005 BY T. BAKER SMITH & SONS, INC. FOR LDNR. BORROW AREA ELEVATIONS SHOWN ON THE PLANS ARE BASED ON SURVEYS PERFORMED IN 2003 BY USACE. PIPELINE CORRIDOR ELEVATIONS SHOWN ON SECTION B-B' ON THE PLANS ARE BASED ON SURVEYS PERFORMED IN AUGUST 2007 BY LDNR.

3. THE CONTRACTOR SHALL FOLLOW THE SPECIFIED PIPELINE CORRIDOR AND SHALL NOT, AT ANY TIME, TREAD ON EXISTING MARSH OR VEGETATED WETLANDS UNLESS OTHERWISE DIRECTED BY THE ENGINEER.

4. THE CONTRACTOR SHALL BE RESPONSIBLE FOR NAVIGATING WITHIN THE LIMITS OF THE PROJECT PLAN AREA AND SHALL NOTIFY LANDOWNERS ACCORDING TO THE LAND RIGHTS MEMORANDUM SHOWN IN APPENDIX C. THE ENGINEER OR HIS REPRESENTATIVE SHALL MONITOR THE LOCATION DURING CONSTRUCTION.

5. THE CONTRACTOR SHALL BE RESPONSIBLE FOR NOTIFYING PIPELINE AND UTILITY OPERATORS AT LEAST 72 HOURS IN ADVANCE OF THE WORK. PIPELINES IN OPEN WATER SHALL BE MARKED WITH BUOYS BY THE CONTRACTOR. THE CONTRACTOR SHALL MAINTAIN BUOYS DURING CONSTRUCTION OR HAVE ADEQUATE NAVIGATIONAL EQUIPMENT ON THE DREDGE TO AVOID DREDGING IN RESTRICTED AREAS. THE CONTRACTOR SHALL NOT ANCHOR OR EXCAVATE WITHIN 500 FEET OF ANY PIPELINE IN THE MISSISSIPPI RIVER. NO EXCAVATION SHALL BE PERMITTED WITHIN 50 FEET OF THE 20" SHELL OIL PIPELINE IN THE FILL AREA. THE FOLLOWING IS A LIST OF PIPELINE OPERATORS KNOWN TO HAVE PIPELINES IN THE VICINITY. CALL LOUISIANA ONE CALL AT 1-800-272-3020 5 DAYS PRIOR TO EXCAVATION TO LOCATE ANY OTHER PIPELINES OR UTILITIES.

SHELL OIL PIPELINE
CONTACT: FLETCHER PUDERER
PHONE: (504) 416-4011

PLAINS ALL AMERICAN PIPELINE, L.P.
CONTACT: RUSTY CAVALIER
PHONE: (504) 393-6282

ENTERGY SUBMERGED TRANSMISSION LINE
CONTACT: GARY HERGERT
PHONE: (985) 850-1253

ENTERGY OVERHEAD TRANSMISSION LINE
CONTACT: JOSEPH GIAMMALVA
PHONE: (504) 219-4207

PLAQUEMINES PARISH WATER LINE
CONTACT: GENE FOX
PHONE: (504) 297-5414

6. PLANS AND SPECIFICATIONS ARE COMPLEMENTARY; WHAT IS REQUIRED BY ONE IS BINDING AS IF REQUIRED BY ALL. CLARIFICATIONS AND INTERPRETATIONS OF, OR NOTIFICATIONS OF MINOR VARIATIONS AND DEVIATIONS IN THE CONTRACT DOCUMENTS, WILL BE ISSUED BY THE ENGINEER.

7. ANY DAMAGE TO EXISTING U.S. COAST GUARD NAVIGATION AIDS OR PRIVATE NAVIGATION AIDS SHALL BE REPAIRED BY THE CONTRACTOR TO U.S. COAST GUARD STANDARDS AT THE EXPENSE OF THE CONTRACTOR.

8. THE MARSH CREATION AREAS AND BORROW AREA MAY BE REVISED BY THE ENGINEER AT THE TIME OF CONSTRUCTION TO REFLECT CHANGES IN FIELD CONDITIONS.

9. ESTIMATED MARSH CREATION QUANTITIES SHOWN ARE FOR BIDDING PURPOSES ONLY AND WERE CALCULATED ACCORDING TO CONDITIONS SURVEYED IN FEBRUARY 2005. QUANTITIES WERE CALCULATED USING THE AVERAGE END AREA METHOD OF SECTIONS. THE OWNER RESERVES THE RIGHT TO ADJUST QUANTITIES OF ANY BID ITEM HIGHER OR LOWER WITHOUT ADJUSTMENT OF THE UNIT PRICE.

10. DATA FROM LDNR GAGE BA03C-CR-61 IN BAYOU DUPONT WAS USED TO CALCULATE THE MHW AND MLW. ELEVATIONS ARE REFERENCED TO NAVD 88, US FEET. MHW = 0.87' AND MLW = 0.50'.

11. THE CONTRACTOR SHALL PERFORM A MAGNETOMETER SURVEY OF THE BORROW AREA AND THE FILL AREAS AS WELL AS ANY OTHER EXCAVATION LOCATIONS PRIOR TO EXCAVATION. DRAWINGS SHOWING THE TRACK LINES, ANY MAGNETOMETER HITS, COORDINATES, AMPLITUDE, SIGNATURE TYPE, AND SIGNATURE WIDTH OF ALL MAGNETOMETER HITS SHALL BE SUBMITTED TO THE ENGINEER PRIOR TO EXCAVATION AS PER TS-3.3.7 OF THE SPECIFICATIONS.

12. NO EXCAVATION OF MATERIAL IS ALLOWED NEAR THE MISSISSIPPI RIVER FLOOD PROTECTION LEVEE, PLAQUEMINES PARISH FLOOD PROTECTION LEVEES, OR NAOMI SIPHON LEVEES. ALL LEVEE CROSSINGS SHALL BE OVER LAND AND IN ACCORDANCE WITH THE PLANS AND SPECIFICATIONS.

SUMMARY OF ESTIMATED QUANTITIES

BASE BID

ITEM No.	DESCRIPTION	UNIT	ESTIMATED QUANTITY
1	MOBILIZATION AND DEMOBILIZATION	LUMP SUM	1
2	SURVEYS	LUMP SUM	1
3	EARTHEN CONTAINMENT DIKES	LINEAR FOOT	26,821
4	JACKED CASING PIPE	LINEAR FOOT	260
5	MARSH CREATION FILL	CUBIC YARD	2,335,110
6	SETTLEMENT PLATES	EACH	5
7	GRADE STAKES	LUMP SUM	1

* THE LINEAR FOOTAGE FOR CONTAINMENT DIKES WAS ESTIMATED USING AERIAL PHOTOGRAPHY, FIELD SURVEYS, AND AUTOCAD. THE OWNER RESERVES THE RIGHT TO REQUEST ADDITIONAL DIKES BE BUILT FOR CONSTRUCTION AT THE CONTRACTOR'S BID UNIT PRICE PER LINEAR FOOT.

REV.	DATE	DESCRIPTION	BY

LOUISIANA DEPARTMENT OF NATURAL RESOURCES
COASTAL ENGINEERING DIVISION
617 NORTH 3RD STREET
BATON ROUGE, LOUISIANA 70802

DRAWN BY: KRISTI CANTU
DESIGNED BY: WHITNEY THOMPSON

MISSISSIPPI RIVER SEDIMENT DELIVERY SYSTEM - BAYOU DUPONT
STATE PROJECT NUMBER: BA-39
FEDERAL PROJECT NUMBER: BA-39
APPROVED BY: LUKE LEBAS, P.E.

GENERAL NOTES
DATE: AUGUST 2008
SHEET 2 OF 24

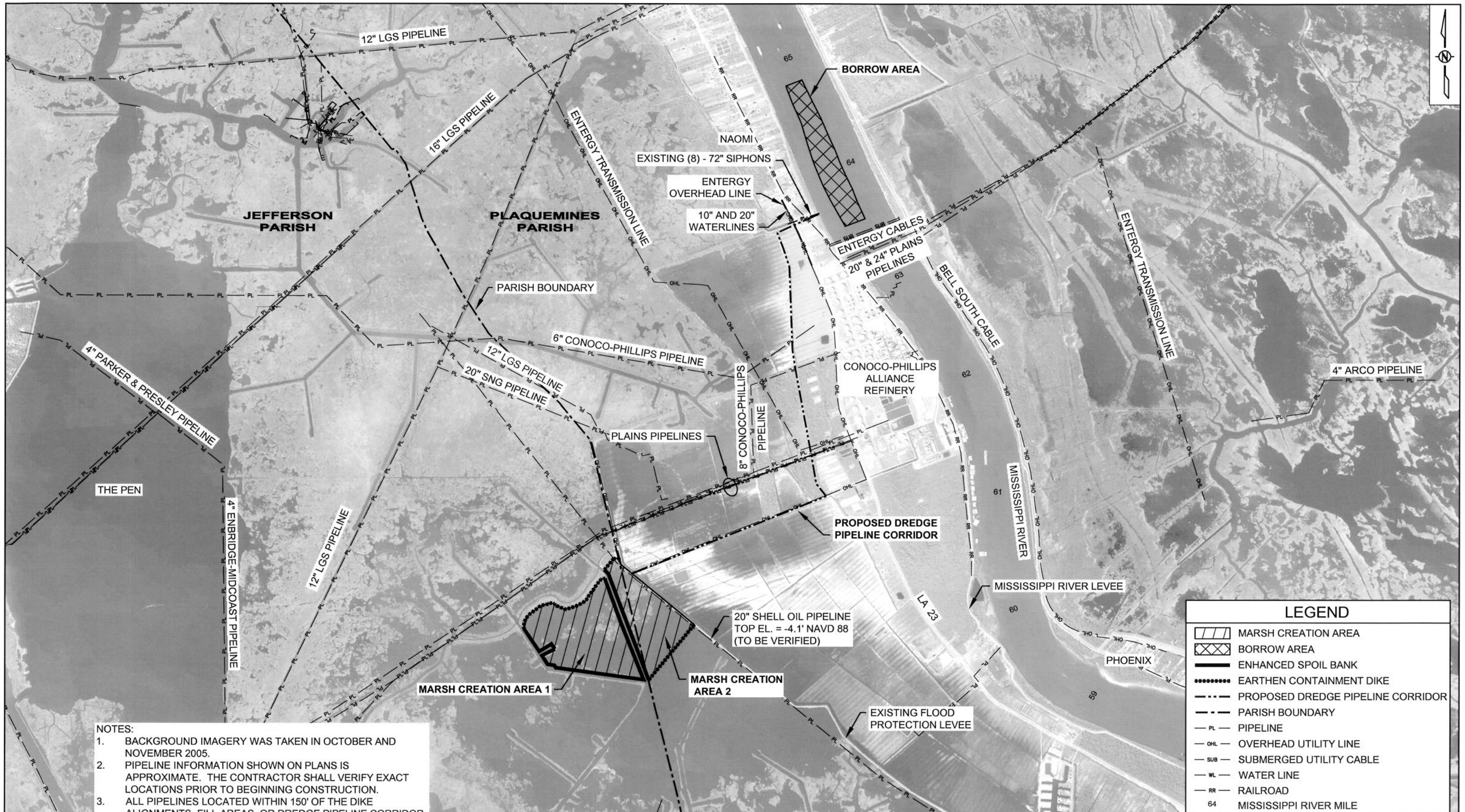

NOTES:

1. BACKGROUND IMAGERY WAS TAKEN IN OCTOBER AND NOVEMBER 2005.
2. PIPELINE INFORMATION SHOWN ON PLANS IS APPROXIMATE. THE CONTRACTOR SHALL VERIFY EXACT LOCATIONS PRIOR TO BEGINNING CONSTRUCTION.
3. ALL PIPELINES LOCATED WITHIN 150' OF THE DIKE ALIGNMENTS, FILL AREAS, OR DREDGE PIPELINE CORRIDOR SHALL BE PROBED AND THEIR LOCATIONS MARKED FOR THE DURATION OF CONSTRUCTION ACTIVITIES. SEE TS-3.3.8 OF THE SPECIFICATIONS.

REV.	DATE	DESCRIPTION	BY

LOUISIANA DEPARTMENT OF NATURAL RESOURCES
COASTAL ENGINEERING DIVISION
617 NORTH 3RD STREET
BATON ROUGE, LOUISIANA 70802

DRAWN BY: KRISTI CANTU
DESIGNED BY: WHITNEY THOMPSON

MISSISSIPPI RIVER SEDIMENT DELIVERY SYSTEM - BAYOU DUPONT

STATE PROJECT NUMBER: BA-39
FEDERAL PROJECT NUMBER: BA-39
APPROVED BY: LUKE LEBAS, P.E.

PROJECT LAYOUT

DATE: AUGUST 2008
SHEET 3 OF 24

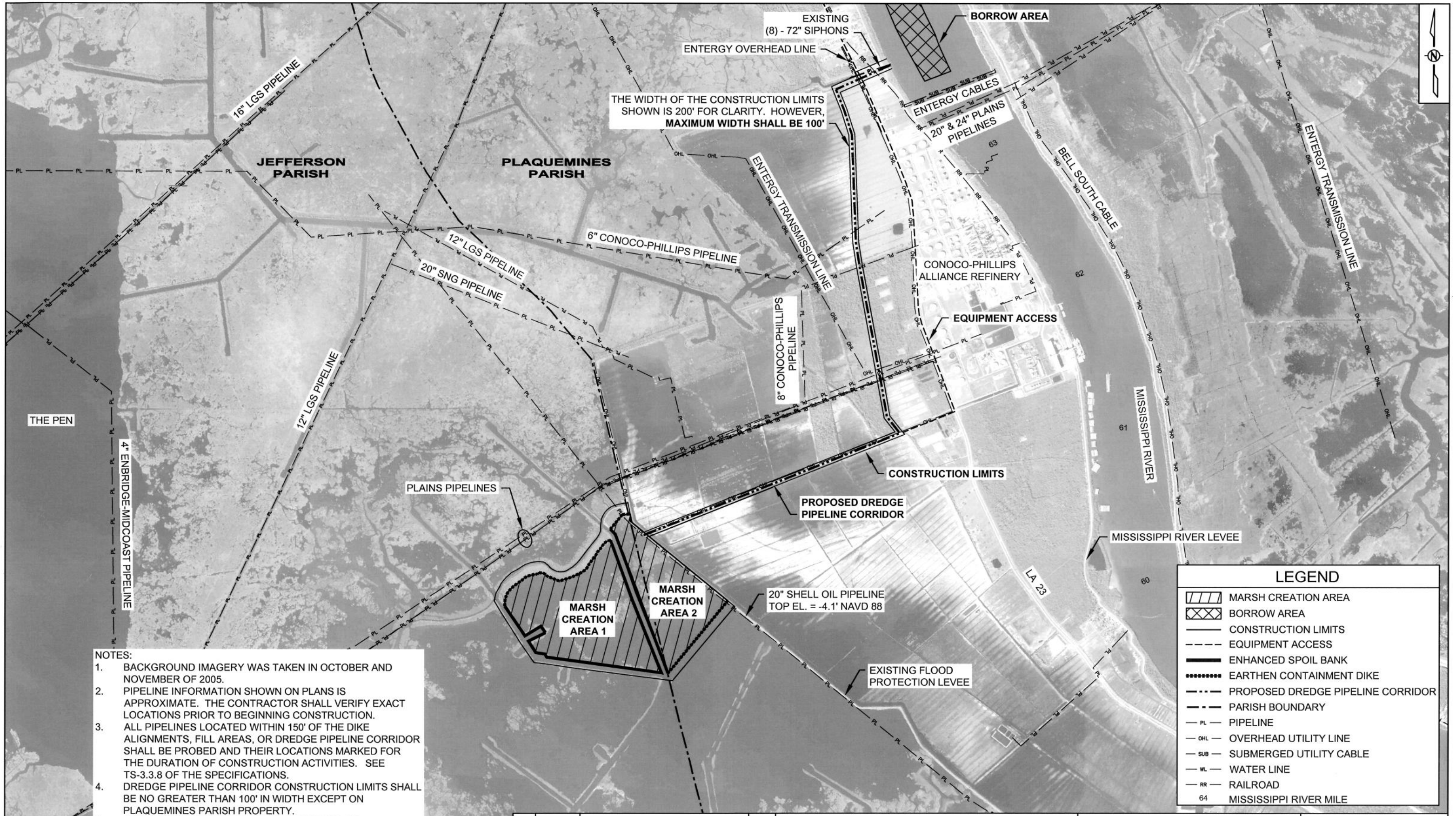

NOTES:

1. BACKGROUND IMAGERY WAS TAKEN IN OCTOBER AND NOVEMBER OF 2005.
2. PIPELINE INFORMATION SHOWN ON PLANS IS APPROXIMATE. THE CONTRACTOR SHALL VERIFY EXACT LOCATIONS PRIOR TO BEGINNING CONSTRUCTION.
3. ALL PIPELINES LOCATED WITHIN 150' OF THE DIKE ALIGNMENTS, FILL AREAS, OR DREDGE PIPELINE CORRIDOR SHALL BE PROBED AND THEIR LOCATIONS MARKED FOR THE DURATION OF CONSTRUCTION ACTIVITIES. SEE TS-3.3.8 OF THE SPECIFICATIONS.
4. DREDGE PIPELINE CORRIDOR CONSTRUCTION LIMITS SHALL BE NO GREATER THAN 100' IN WIDTH EXCEPT ON PLAQUEMINES PARISH PROPERTY.
5. CONSTRUCTION STAGING AREA PERMITTED ON PLAQUEMINES PARISH PROPERTY NEAR NAOMI SIPHON. SEE TS-1 OF THE SPECIFICATIONS.

REV.	DATE	DESCRIPTION	BY

LOUISIANA DEPARTMENT OF NATURAL RESOURCES
COASTAL ENGINEERING DIVISION
617 NORTH 3RD STREET
BATON ROUGE, LOUISIANA 70802

DRAWN BY: KRISTI CANTU
DESIGNED BY: WHITNEY THOMPSON

MISSISSIPPI RIVER SEDIMENT DELIVERY SYSTEM - BAYOU DUPONT

STATE PROJECT NUMBER: BA-39
FEDERAL PROJECT NUMBER: BA-39
APPROVED BY: LUKE LEBAS, P.E.

CONSTRUCTION LIMITS

DATE: AUGUST 2008
SHEET 4 OF 24

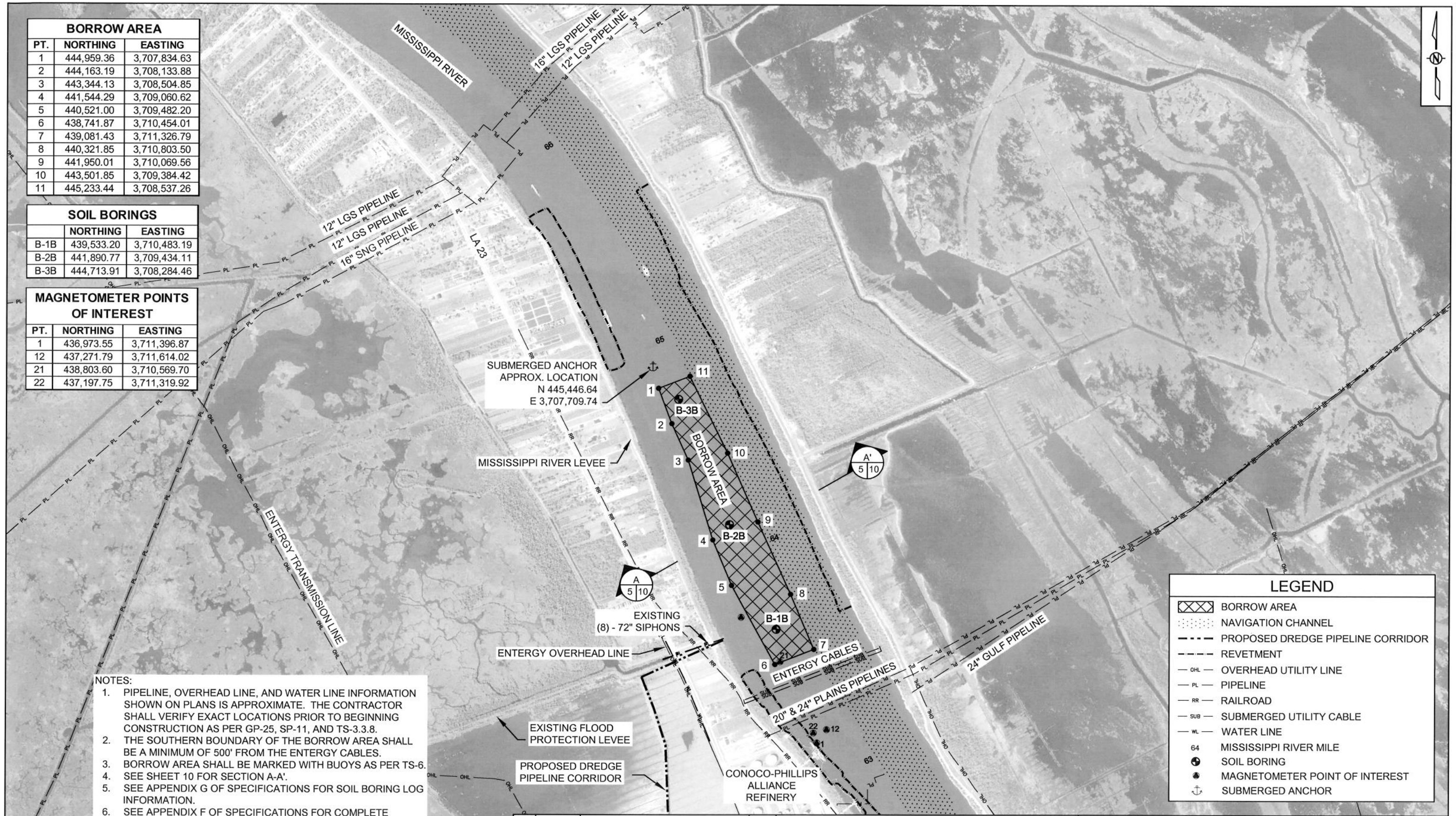

BORROW AREA

PT.	NORTHING	EASTING
1	444,959.36	3,707,834.63
2	444,163.19	3,708,133.88
3	443,344.13	3,708,504.85
4	441,544.29	3,709,060.62
5	440,521.00	3,709,482.20
6	438,741.87	3,710,454.01
7	439,081.43	3,711,326.79
8	440,321.85	3,710,803.50
9	441,950.01	3,710,069.56
10	443,501.85	3,709,384.42
11	445,233.44	3,708,537.26

SOIL BORINGS

	NORTHING	EASTING
B-1B	439,533.20	3,710,483.19
B-2B	441,890.77	3,709,434.11
B-3B	444,713.91	3,708,284.46

MAGNETOMETER POINTS OF INTEREST

PT.	NORTHING	EASTING
1	436,973.55	3,711,396.87
12	437,271.79	3,711,614.02
21	438,803.60	3,710,569.70
22	437,197.75	3,711,319.92

NOTES:

1. PIPELINE, OVERHEAD LINE, AND WATER LINE INFORMATION SHOWN ON PLANS IS APPROXIMATE. THE CONTRACTOR SHALL VERIFY EXACT LOCATIONS PRIOR TO BEGINNING CONSTRUCTION AS PER GP-25, SP-11, AND TS-3.3.8.
2. THE SOUTHERN BOUNDARY OF THE BORROW AREA SHALL BE A MINIMUM OF 500' FROM THE ENTERGY CABLES.
3. BORROW AREA SHALL BE MARKED WITH BUOYS AS PER TS-6.
4. SEE SHEET 10 FOR SECTION A-A'.
5. SEE APPENDIX G OF SPECIFICATIONS FOR SOIL BORING LOG INFORMATION.
6. SEE APPENDIX F OF SPECIFICATIONS FOR COMPLETE MAGNETOMETER SURVEY.

REV.	DATE	DESCRIPTION	BY

LOUISIANA DEPARTMENT OF NATURAL RESOURCES
COASTAL ENGINEERING DIVISION
617 NORTH 3RD STREET
BATON ROUGE, LOUISIANA 70802

DRAWN BY: KRISTI CANTU
DESIGNED BY: WHITNEY THOMPSON

MISSISSIPPI RIVER SEDIMENT DELIVERY SYSTEM - BAYOU DUPONT

STATE PROJECT NUMBER: BA-39
FEDERAL PROJECT NUMBER: BA-39
APPROVED BY: LUKE LEBAS, P.E.

BORROW AREA LAYOUT

DATE: AUGUST 2008
SHEET 5 OF 24

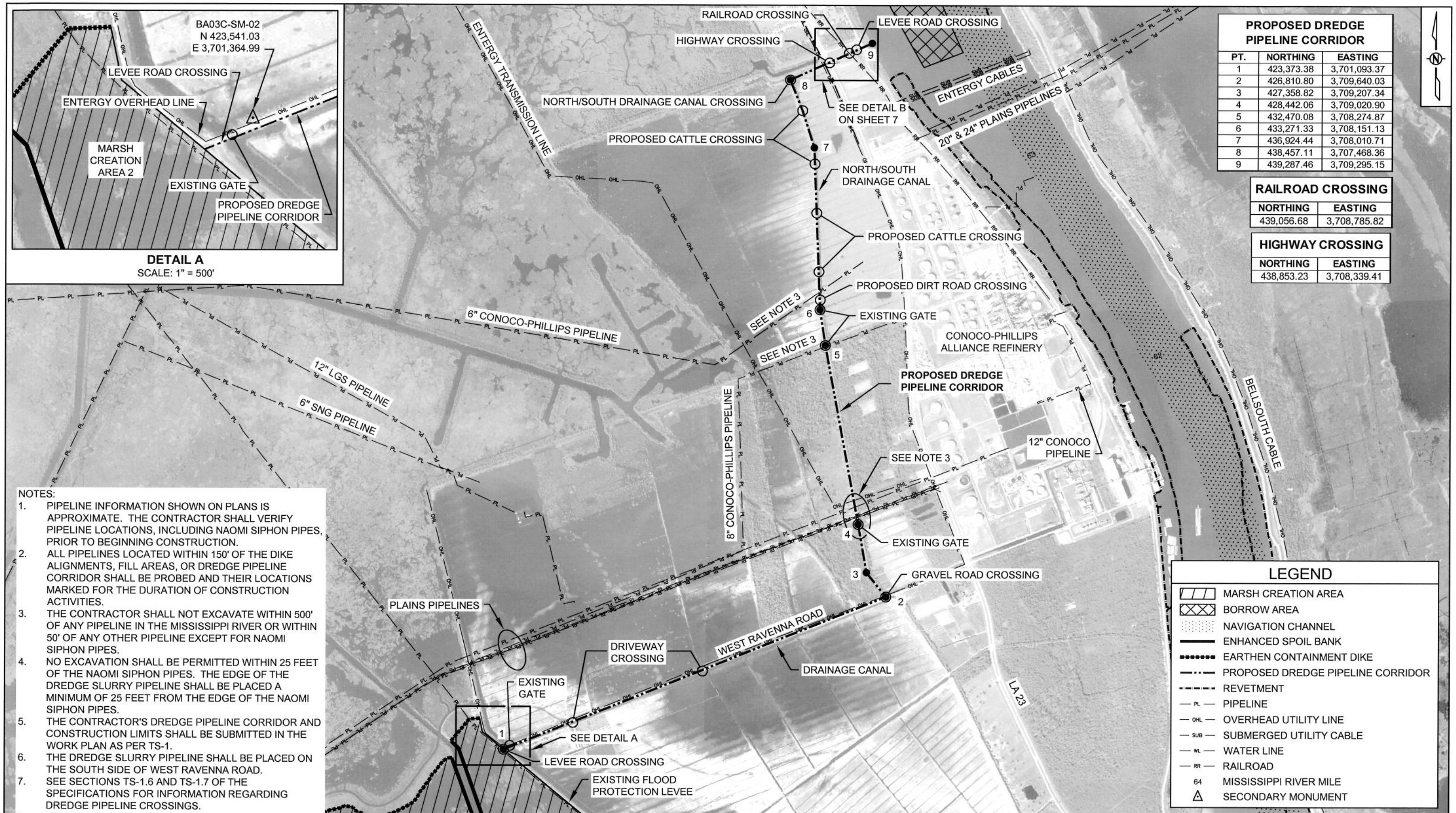

NOTES:

1. PIPELINE INFORMATION SHOWN ON PLANS IS APPROXIMATE. THE CONTRACTOR SHALL VERIFY PIPELINE LOCATIONS, INCLUDING NAOMI SIPHON PIPES, PRIOR TO BEGINNING CONSTRUCTION.
2. ALL PIPELINES LOCATED WITHIN 150' OF THE DIKE ALIGNMENTS, FILL AREAS, OR DREDGE PIPELINE CORRIDOR SHALL BE PROBED AND THEIR LOCATIONS MARKED FOR THE DURATION OF CONSTRUCTION ACTIVITIES.
3. THE CONTRACTOR SHALL NOT EXCAVATE WITHIN 500' OF ANY PIPELINE IN THE MISSISSIPPI RIVER OR WITHIN 50' OF ANY OTHER PIPELINE EXCEPT FOR NAOMI SIPHON PIPES.
4. NO EXCAVATION SHALL BE PERMITTED WITHIN 25 FEET OF THE NAOMI SIPHON PIPES. THE EDGE OF THE DREDGE SLURRY PIPELINE SHALL BE PLACED A MINIMUM OF 25 FEET FROM THE EDGE OF THE NAOMI SIPHON PIPES.
5. THE CONTRACTOR'S DREDGE PIPELINE CORRIDOR AND CONSTRUCTION LIMITS SHALL BE SUBMITTED IN THE WORK PLAN AS PER TS-1.
6. THE DREDGE SLURRY PIPELINE SHALL BE PLACED ON THE SOUTH SIDE OF WEST RAVENNA ROAD.
7. SEE SECTIONS TS-1.6 AND TS-1.7 OF THE SPECIFICATIONS FOR INFORMATION REGARDING DREDGE PIPELINE CROSSINGS.
8. WATER LINES ARE LOCATED APPROXIMATELY 4' BELOW GRADE. THE CONTRACTOR SHALL VERIFY WATER LINE LOCATIONS PRIOR TO BEGINNING CONSTRUCTION.
9. SEE SHEETS 13 - 16 FOR CROSSING DETAILS.

PROPOSED DREDGE PIPELINE CORRIDOR

PT.	NORTHING	EASTING
1	423,373.38	3,701,093.37
2	426,810.80	3,709,640.03
3	427,358.82	3,709,207.34
4	428,442.06	3,709,020.90
5	432,470.08	3,708,274.87
6	433,271.33	3,708,151.13
7	436,924.44	3,708,010.71
8	438,457.11	3,707,468.36
9	439,287.46	3,709,295.15

RAILROAD CROSSING

NORTHING	EASTING
439,056.68	3,708,785.82

HIGHWAY CROSSING

NORTHING	EASTING
438,853.23	3,708,339.41

LEGEND

- MARSH CREATION AREA
- BORROW AREA
- NAVIGATION CHANNEL
- ENHANCED SPOIL BANK
- EARTHEN CONTAINMENT DIKE
- PROPOSED DREDGE PIPELINE CORRIDOR
- REVETMENT
- PL — PIPELINE
- OHL — OVERHEAD UTILITY LINE
- SUB — SUBMERGED UTILITY CABLE
- WL — WATER LINE
- RR — RAILROAD
- 64 MISSISSIPPI RIVER MILE
- SECONDARY MONUMENT

REV.	DATE	DESCRIPTION	BY

LOUISIANA DEPARTMENT OF NATURAL RESOURCES
COASTAL ENGINEERING DIVISION
617 NORTH 3RD STREET
BATON ROUGE, LOUISIANA 70802

DRAWN BY: KRISTI CANTU
DESIGNED BY: WHITNEY THOMPSON

MISSISSIPPI RIVER SEDIMENT DELIVERY SYSTEM - BAYOU DUPONT

STATE PROJECT NUMBER: BA-39
FEDERAL PROJECT NUMBER: BA-39
APPROVED BY: LUKE LEBAS, P.E.

DREDGE PIPELINE CORRIDOR LAYOUT

DATE: AUGUST 2008
SHEET 6 OF 24

CASING PIPE	NORTHING	EASTING	LEGTH (FT.)
HIGHWAY	438,853.23	3,708,339.41	170
RAILROAD	439,056.68	3,708,785.82	90

SOIL BORING	NORTHING	EASTING
B-5B	439,022.25	3,708,271.98

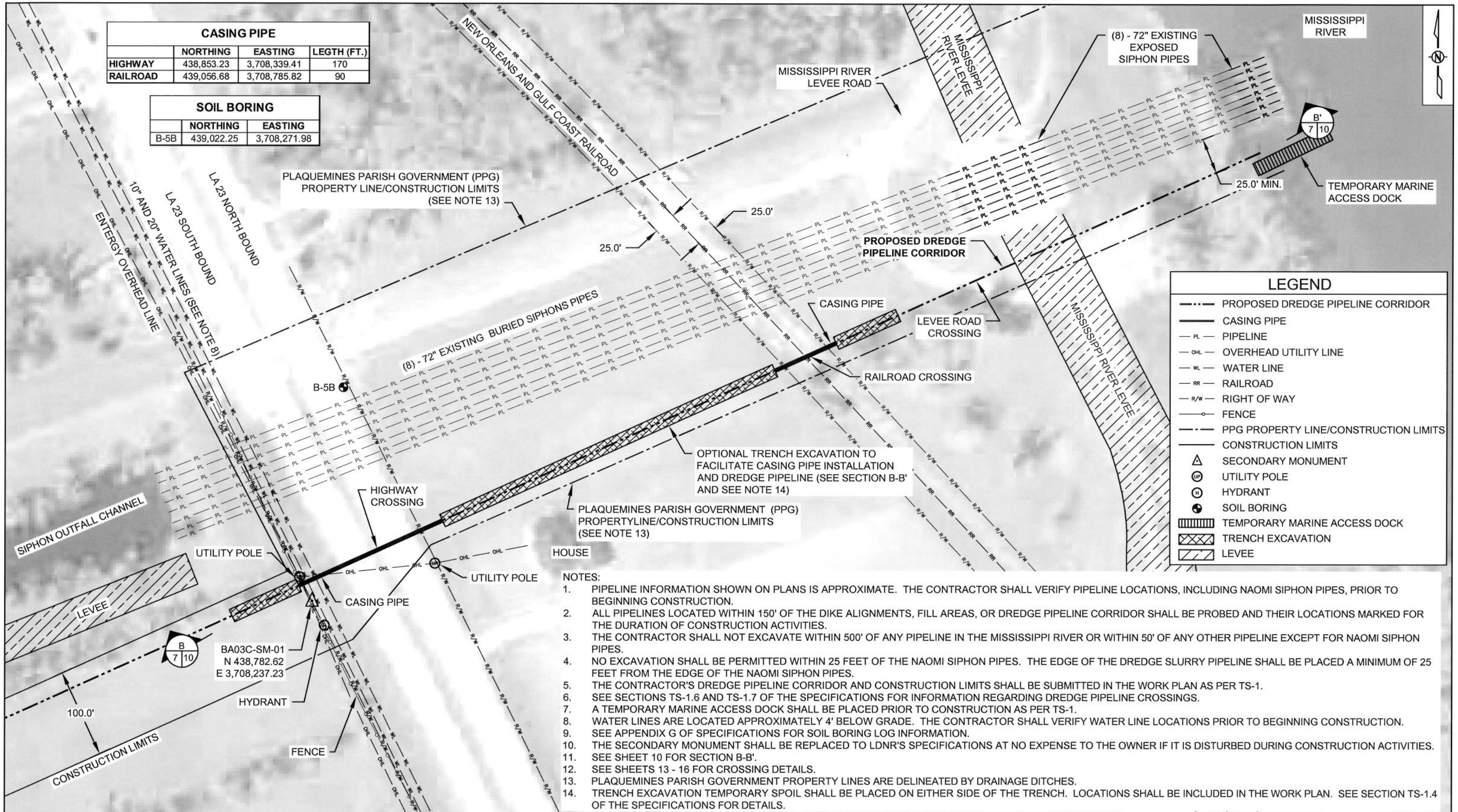

NOTES:

1. PIPELINE INFORMATION SHOWN ON PLANS IS APPROXIMATE. THE CONTRACTOR SHALL VERIFY PIPELINE LOCATIONS, INCLUDING NAOMI SIPHON PIPES, PRIOR TO BEGINNING CONSTRUCTION.
2. ALL PIPELINES LOCATED WITHIN 150' OF THE DIKE ALIGNMENTS, FILL AREAS, OR DREDGE PIPELINE CORRIDOR SHALL BE PROBED AND THEIR LOCATIONS MARKED FOR THE DURATION OF CONSTRUCTION ACTIVITIES.
3. THE CONTRACTOR SHALL NOT EXCAVATE WITHIN 500' OF ANY PIPELINE IN THE MISSISSIPPI RIVER OR WITHIN 50' OF ANY OTHER PIPELINE EXCEPT FOR NAOMI SIPHON PIPES.
4. NO EXCAVATION SHALL BE PERMITTED WITHIN 25 FEET OF THE NAOMI SIPHON PIPES. THE EDGE OF THE DREDGE SLURRY PIPELINE SHALL BE PLACED A MINIMUM OF 25 FEET FROM THE EDGE OF THE NAOMI SIPHON PIPES.
5. THE CONTRACTOR'S DREDGE PIPELINE CORRIDOR AND CONSTRUCTION LIMITS SHALL BE SUBMITTED IN THE WORK PLAN AS PER TS-1.
6. SEE SECTIONS TS-1.6 AND TS-1.7 OF THE SPECIFICATIONS FOR INFORMATION REGARDING DREDGE PIPELINE CROSSINGS.
7. A TEMPORARY MARINE ACCESS DOCK SHALL BE PLACED PRIOR TO CONSTRUCTION AS PER TS-1.
8. WATER LINES ARE LOCATED APPROXIMATELY 4' BELOW GRADE. THE CONTRACTOR SHALL VERIFY WATER LINE LOCATIONS PRIOR TO BEGINNING CONSTRUCTION.
9. SEE APPENDIX G OF SPECIFICATIONS FOR SOIL BORING LOG INFORMATION.
10. THE SECONDARY MONUMENT SHALL BE REPLACED TO LDNR'S SPECIFICATIONS AT NO EXPENSE TO THE OWNER IF IT IS DISTURBED DURING CONSTRUCTION ACTIVITIES.
11. SEE SHEET 10 FOR SECTION B-B'.
12. SEE SHEETS 13 - 16 FOR CROSSING DETAILS.
13. PLAQUEMINES PARISH GOVERNMENT PROPERTY LINES ARE DELINEATED BY DRAINAGE DITCHES.
14. TRENCH EXCAVATION TEMPORARY SPOIL SHALL BE PLACED ON EITHER SIDE OF THE TRENCH. LOCATIONS SHALL BE INCLUDED IN THE WORK PLAN. SEE SECTION TS-1.4 OF THE SPECIFICATIONS FOR DETAILS.

REV.	DATE	DESCRIPTION	BY

LOUISIANA DEPARTMENT OF NATURAL RESOURCES
COASTAL ENGINEERING DIVISION
617 NORTH 3RD STREET
BATON ROUGE, LOUISIANA 70802

DRAWN BY: KRISTI CANTU
DESIGNED BY: WHITNEY THOMPSON

MISSISSIPPI RIVER SEDIMENT DELIVERY SYSTEM - BAYOU DUPONT

STATE PROJECT NUMBER: BA-39
FEDERAL PROJECT NUMBER: BA-39
APPROVED BY: LUKE LEBAS, P.E.

DREDGE PIPELINE CORRIDOR - DETAIL B

DATE: AUGUST 2008
SHEET 7 OF 24

SETTLEMENT PLATES		
PLATE	NORTHING	EASTING
SP1	421,333.00	3,697,014.00
SP2	419,685.00	3,701,141.00
SP3	419,603.00	3,701,637.00
SP4	423,590.00	3,700,607.00
SP5	420,123.88	3,703,042.28

SOIL BORINGS		
	NORTHING	EASTING
B-4A	421,339	3,697,230
B-5A	419,906	3,700,440
B-6A	423,590	3,700,434
B-7A	419,988	3,702,804

EXISTING GEOTECHNICAL MONITORING STATIONS		
	NORTHING	EASTING
G1	419,563.51	3,701,230.63
G2	419,691.76	3,701,553.73

MAGNETOMETER POINTS OF INTEREST		
	NORTHING	EASTING
A	420,072.37	3,697,608.30
B	418,545.92	3,701,906.54
C	419,603.05	3,705,163.70

FILL AREAS 1 AND 2		
	NORTHING	EASTING
1	420,960.17	3,696,382.62
2	419,953.00	3,697,061.52
3	420,280.21	3,697,593.45
4	420,060.99	3,697,750.16
5	419,775.80	3,697,177.82
6	419,234.13	3,697,791.06
7	418,708.34	3,701,652.45
8	423,176.97	3,699,939.15
9	422,176.70	3,699,075.03
10	421,813.84	3,698,194.88
11	422,004.83	3,697,233.26
12	421,625.84	3,696,668.83
13	423,558.31	3,699,923.67
14	423,392.47	3,700,093.50
15	418,694.13	3,701,869.03
16	421,101.84	3,703,844.78
17	423,762.70	3,700,625.94
18	424,070.76	3,700,564.61
19	424,053.13	3,700,329.71

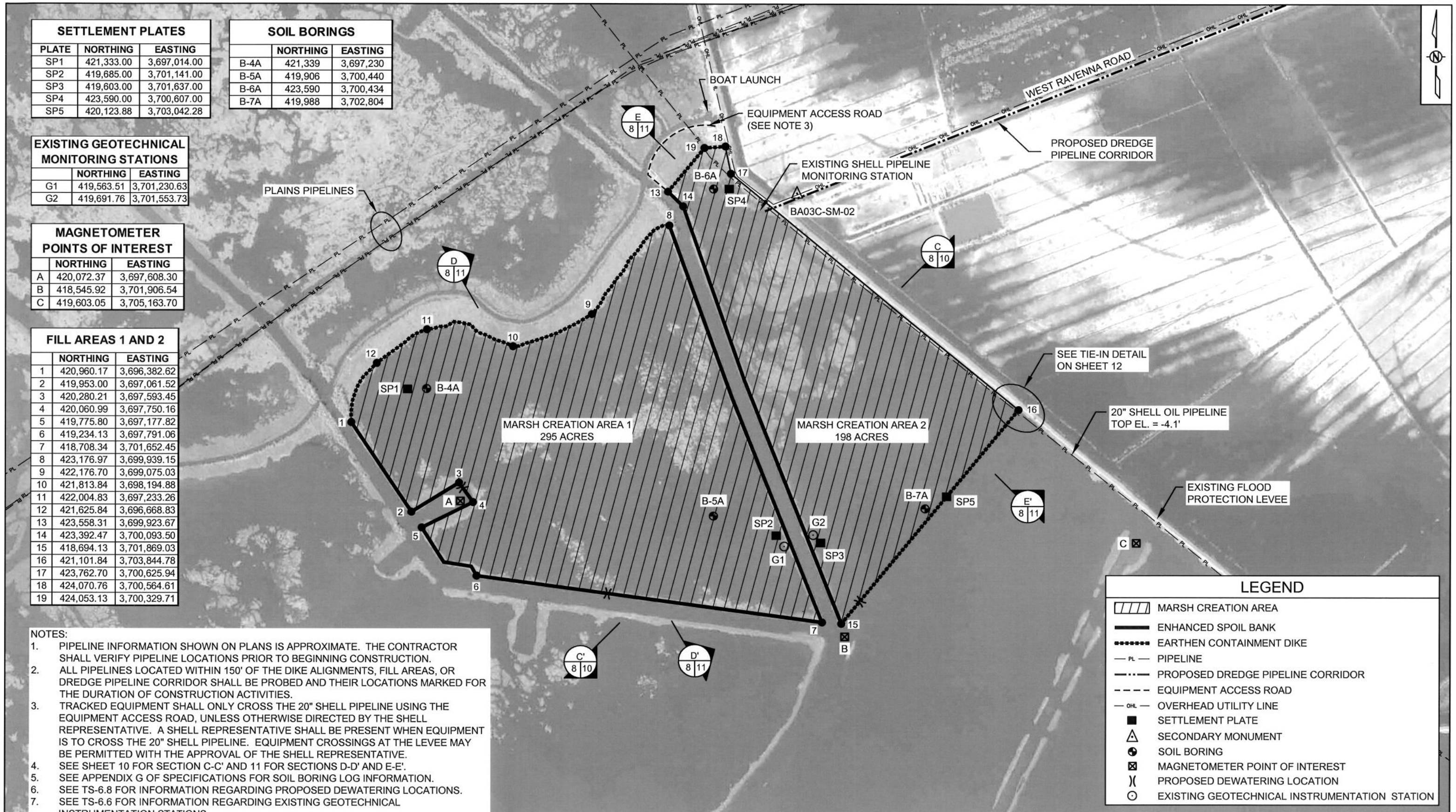

NOTES:

1. PIPELINE INFORMATION SHOWN ON PLANS IS APPROXIMATE. THE CONTRACTOR SHALL VERIFY PIPELINE LOCATIONS PRIOR TO BEGINNING CONSTRUCTION.
2. ALL PIPELINES LOCATED WITHIN 150' OF THE DIKE ALIGNMENTS, FILL AREAS, OR DREDGE PIPELINE CORRIDOR SHALL BE PROBED AND THEIR LOCATIONS MARKED FOR THE DURATION OF CONSTRUCTION ACTIVITIES.
3. TRACKED EQUIPMENT SHALL ONLY CROSS THE 20" SHELL PIPELINE USING THE EQUIPMENT ACCESS ROAD, UNLESS OTHERWISE DIRECTED BY THE SHELL REPRESENTATIVE. A SHELL REPRESENTATIVE SHALL BE PRESENT WHEN EQUIPMENT IS TO CROSS THE 20" SHELL PIPELINE. EQUIPMENT CROSSINGS AT THE LEVEE MAY BE PERMITTED WITH THE APPROVAL OF THE SHELL REPRESENTATIVE.
4. SEE SHEET 10 FOR SECTION C-C' AND 11 FOR SECTIONS D-D' AND E-E'.
5. SEE APPENDIX G OF SPECIFICATIONS FOR SOIL BORING LOG INFORMATION.
6. SEE TS-6.8 FOR INFORMATION REGARDING PROPOSED DEWATERING LOCATIONS.
7. SEE TS-6.6 FOR INFORMATION REGARDING EXISTING GEOTECHNICAL INSTRUMENTATION STATIONS.
8. NO EXCAVATION SHALL BE PERMITTED WITHIN 100 FEET OF THE EXISTING FLOOD PROTECTION LEVEE WITH THE EXCEPTION OF THE CONTAINMENT DIKE TIE-IN AS SHOWN ON SHEET 12.

REV.	DATE	DESCRIPTION	BY

LOUISIANA DEPARTMENT OF NATURAL RESOURCES
COASTAL ENGINEERING DIVISION
617 NORTH 3RD STREET
BATON ROUGE, LOUISIANA 70802

DRAWN BY: KRISTI CANTU
DESIGNED BY: WHITNEY THOMPSON

MISSISSIPPI RIVER SEDIMENT DELIVERY SYSTEM - BAYOU DUPONT

STATE PROJECT NUMBER: BA-39
FEDERAL PROJECT NUMBER: BA-39
APPROVED BY: LUKE LEBAS, P.E.

MARSH CREATION AREA LAYOUT

DATE: AUGUST 2008
SHEET 8 OF 24

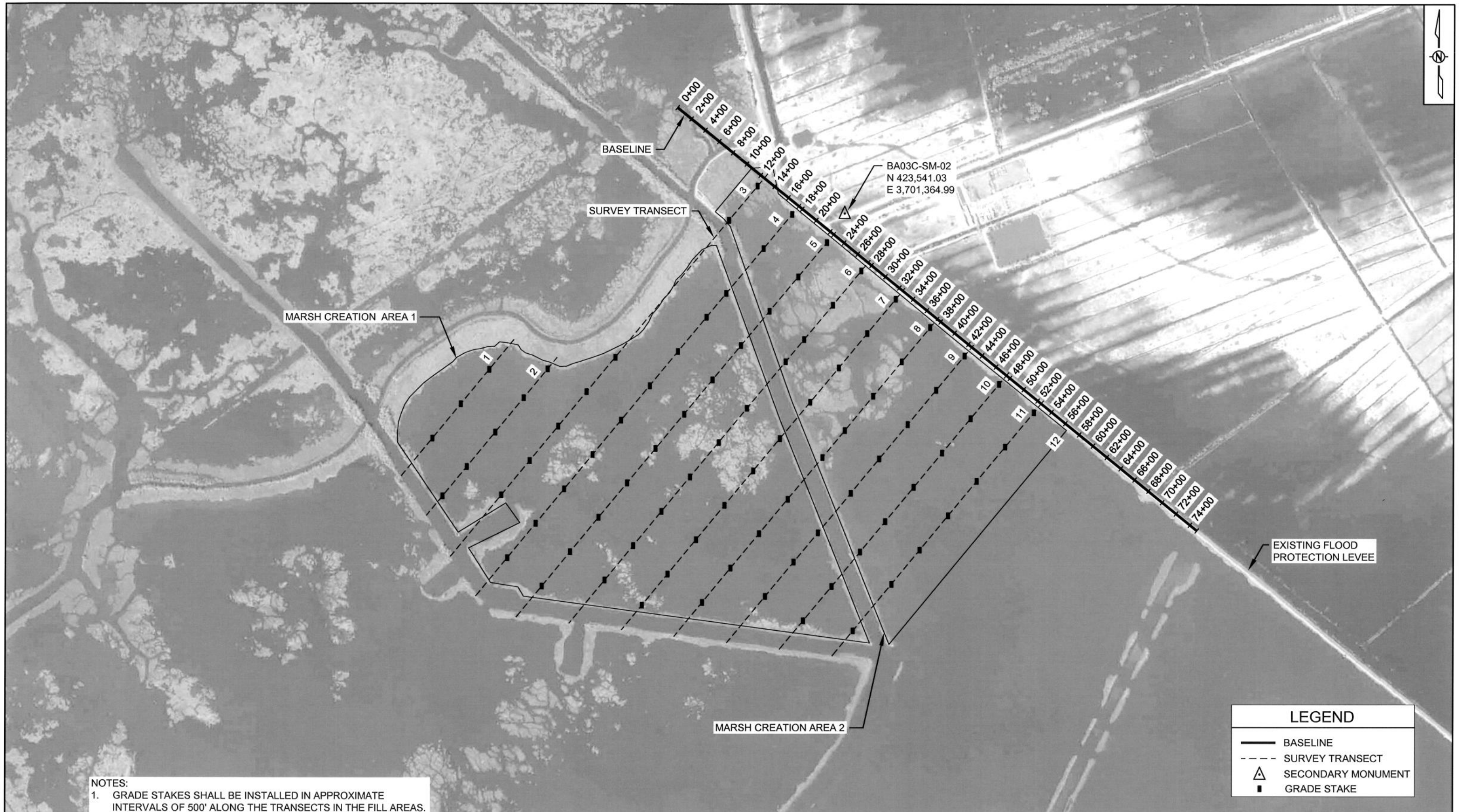

NOTES:
1. GRADE STAKES SHALL BE INSTALLED IN APPROXIMATE INTERVALS OF 500' ALONG THE TRANSECTS IN THE FILL AREAS.
2. SEE APPENDIX E OF THE SPECIFICATIONS FOR SECONDARY MONUMENT DATA SHEETS.

REV.	DATE	DESCRIPTION	BY

LOUISIANA DEPARTMENT OF NATURAL RESOURCES
COASTAL ENGINEERING DIVISION
617 NORTH 3RD STREET
BATON ROUGE, LOUISIANA 70802

DRAWN BY: KRISTI CANTU
DESIGNED BY: WHITNEY THOMPSON

MISSISSIPPI RIVER SEDIMENT DELIVERY SYSTEM - BAYOU DUPONT

STATE PROJECT NUMBER: BA-39
FEDERAL PROJECT NUMBER: BA-39
APPROVED BY: LUKE LEBAS, P.E.

GRADE STAKE LAYOUT

DATE: AUGUST 2008
SHEET 9 OF 24

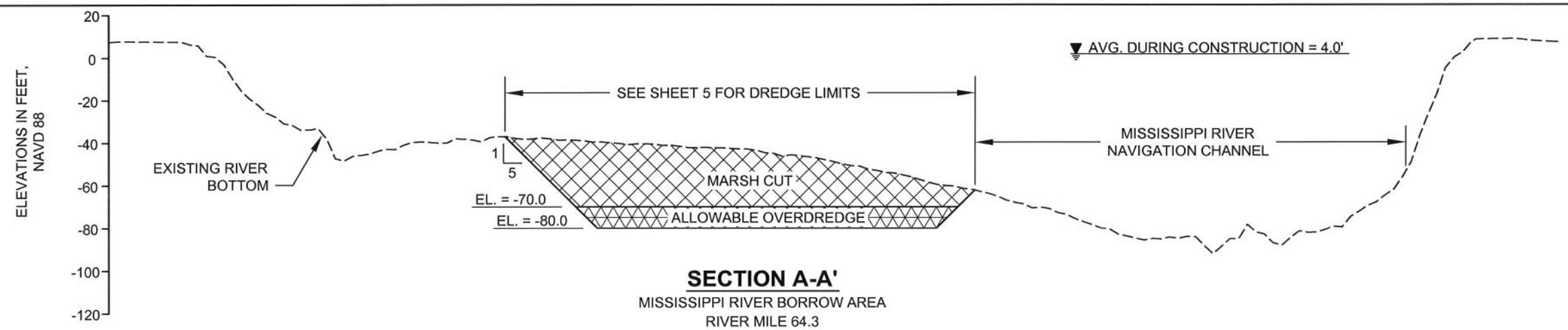

SECTION A-A'

MISSISSIPPI RIVER BORROW AREA
RIVER MILE 64.3
HORIZONTAL: 1" = 300'
VERTICAL: 1" = 60'

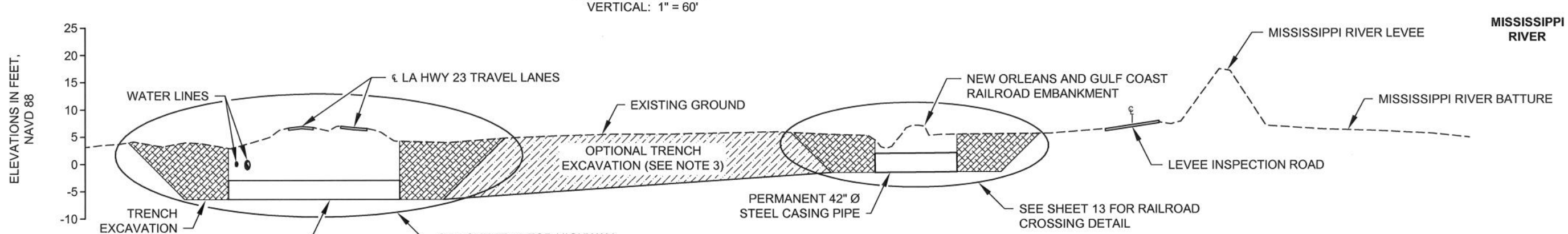

SECTION B-B'

PROPOSED DREDGE PIPELINE CORRIDOR
HORIZONTAL: 1" = 100'
VERTICAL: 1" = 20'

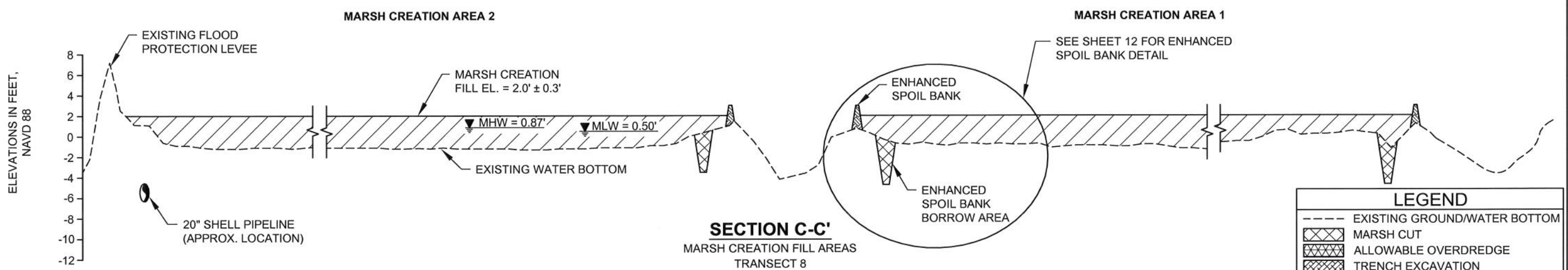

SECTION C-C'

MARSH CREATION FILL AREAS
TRANSECT 8
HORIZONTAL: 1" = 200'
VERTICAL: 1" = 10'

LEGEND

- EXISTING GROUND/WATER BOTTOM
- MARSH CUT
- ALLOWABLE OVERDREDGE
- TRENCH EXCAVATION
- OPTIONAL TRENCH EXCAVATION
- MARSH CREATION (FILL)
- ENHANCED SPOIL BANK

NOTES:
1. SEE SECTION TS-6.5 OF THE SPECIFICATIONS FOR USACE DREDGING RESTRICTIONS.
2. SEE SECTIONS GP-36, GP-37, SP-4, AND TS-8 FOR U.S. COAST GUARD REGULATIONS.
3. ANY ALTERNATE DREDGE SLURRY PIPELINE PLACEMENT METHODS SHALL BE PROPOSED IN THE WORK PLAN FOR APPROVAL BY THE ENGINEER.

REV.	DATE	DESCRIPTION	BY

LOUISIANA DEPARTMENT OF NATURAL RESOURCES
COASTAL ENGINEERING DIVISION
617 NORTH 3RD STREET
BATON ROUGE, LOUISIANA 70802

DRAWN BY: KRISTI CANTU
DESIGNED BY: WHITNEY THOMPSON

MISSISSIPPI RIVER SEDIMENT DELIVERY SYSTEM - BAYOU DUPONT

STATE PROJECT NUMBER: BA-39
FEDERAL PROJECT NUMBER: BA-39
APPROVED BY: LUKE LEBAS, P.E.

TYPICAL SECTIONS

DATE: AUGUST 2008
SHEET 10 OF 24

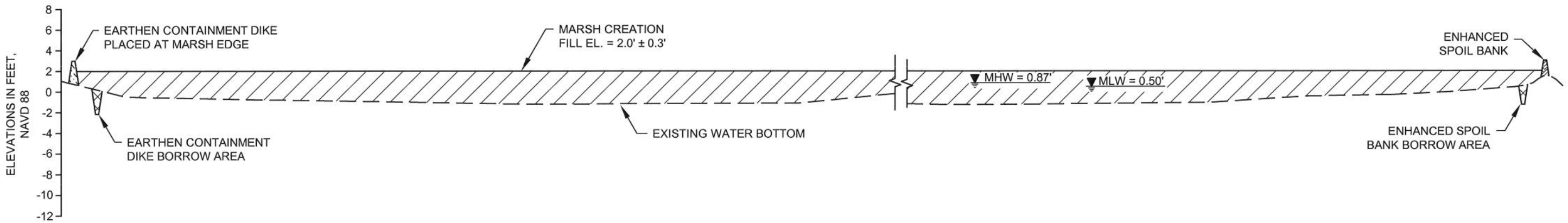

SECTION D-D'

MARSH CREATION FILL AREA 1

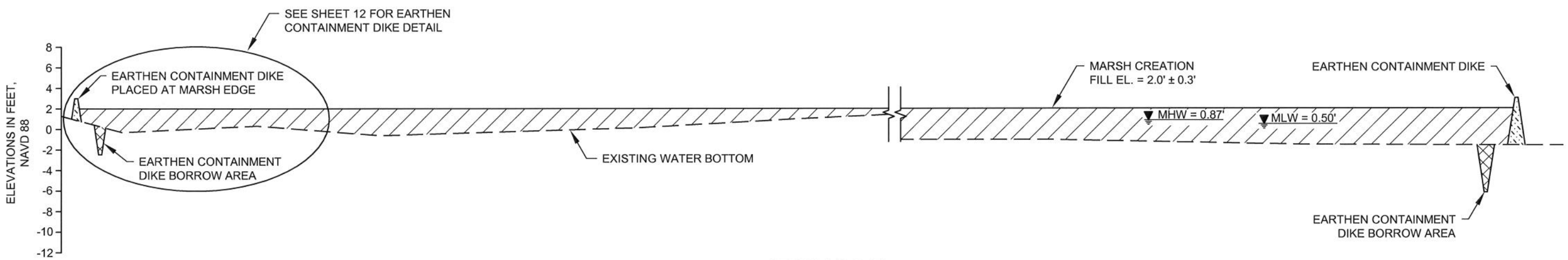

SECTION E-E'

MARSH CREATION FILL AREA 2

LEGEND	
- - - -	EXISTING GROUND/WATER BOTTOM
	MARSH CREATION (FILL)
	ENHANCED SPOIL BANK
	EARTHEN CONTAINMENT DIKE
	BORROW AREA

NOTE:
THE NORTHERN EARTHEN CONTAINMENT DIKE SHALL BE PLACED ALONG THE EXISTING MARSH EDGE.

HORIZONTAL GRAPHIC SCALE
200' 100' 0 200' 400'
10' 5' 0 10' 20'
VERTICAL GRAPHIC SCALE

REV.	DATE	DESCRIPTION	BY

LOUISIANA DEPARTMENT OF NATURAL RESOURCES
COASTAL ENGINEERING DIVISION
617 NORTH 3RD STREET
BATON ROUGE, LOUISIANA 70802

DRAWN BY: KRISTI CANTU
DESIGNED BY: WHITNEY THOMPSON

MISSISSIPPI RIVER SEDIMENT DELIVERY SYSTEM - BAYOU DUPONT

STATE PROJECT NUMBER: BA-39
FEDERAL PROJECT NUMBER: BA-39
APPROVED BY: LUKE LEBAS, P.E.

TYPICAL SECTIONS

DATE: AUGUST 2008
SHEET 11 OF 24

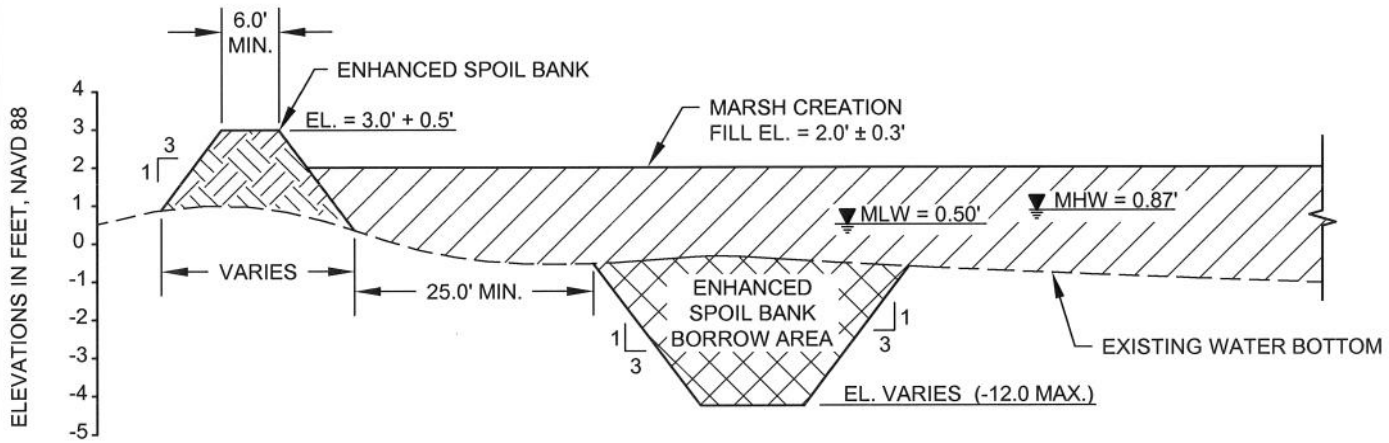

ENHANCED SPOIL BANK DETAIL

HORIZONTAL: 1" = 20'
VERTICAL: 1" = 5'

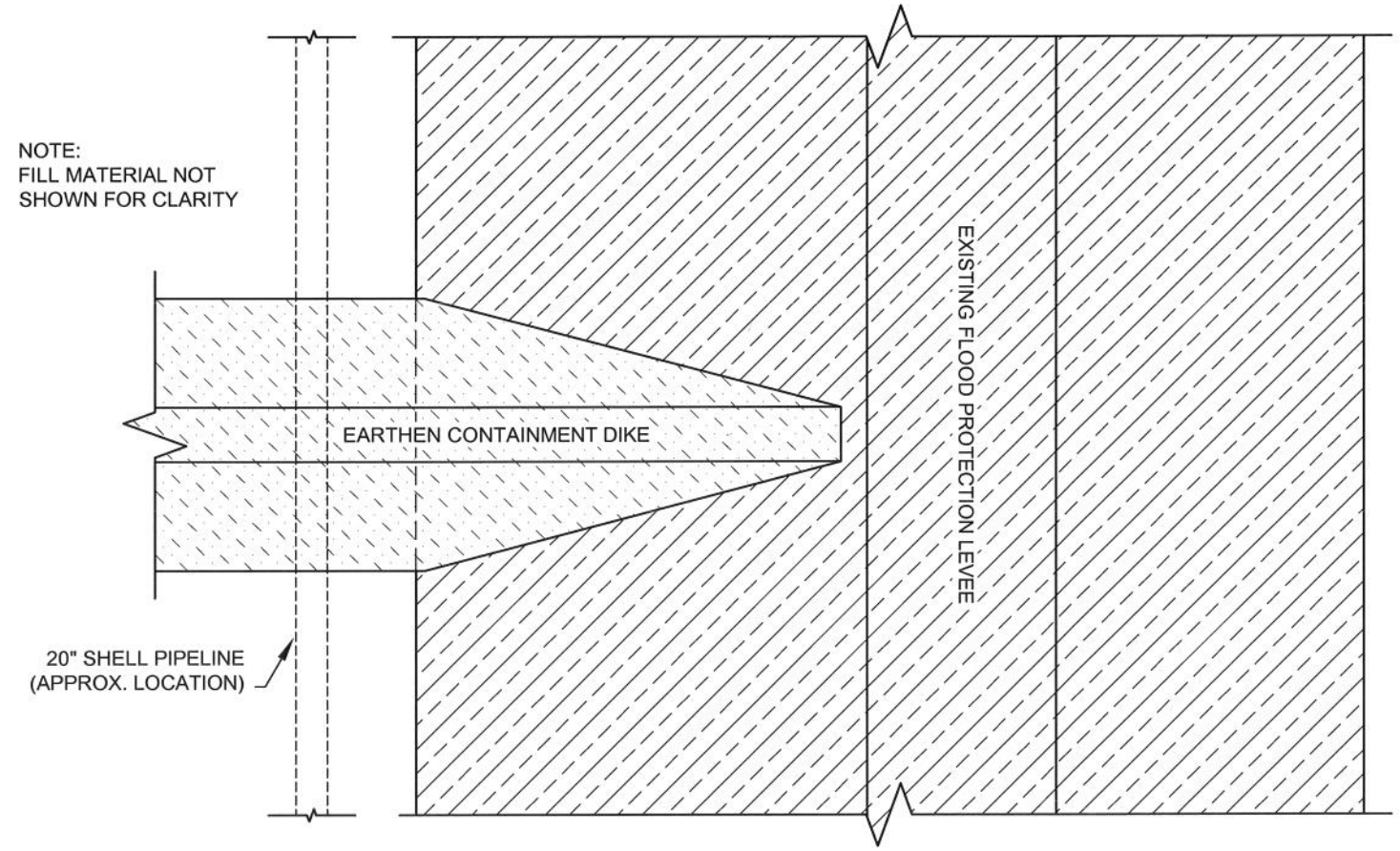

PLAN VIEW
SCALE: 1' = 20'

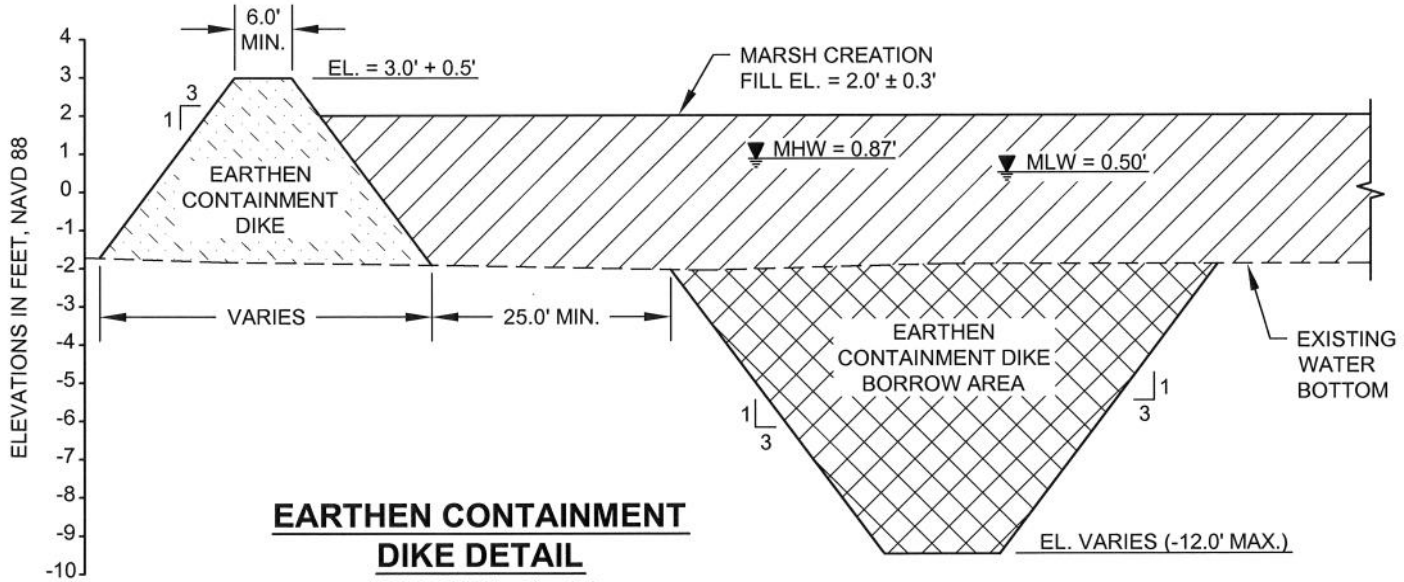

EARTHEN CONTAINMENT DIKE DETAIL

HORIZONTAL: 1" = 20'
VERTICAL: 1" = 5'

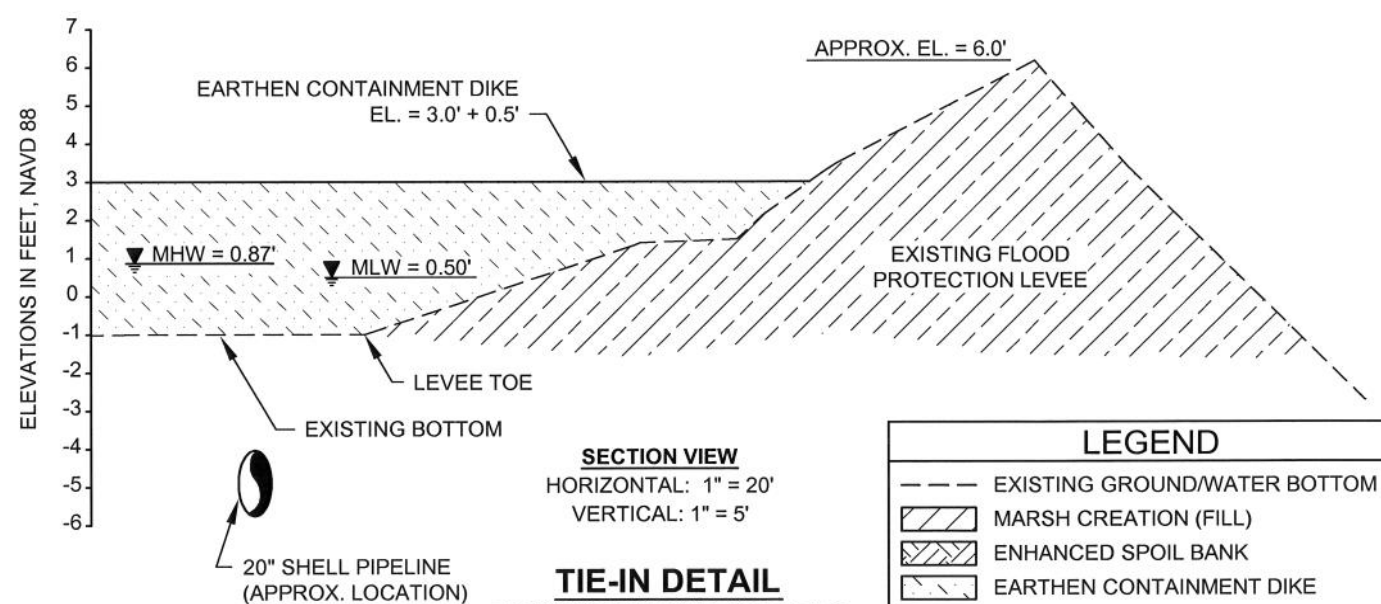

SECTION VIEW
HORIZONTAL: 1" = 20'
VERTICAL: 1" = 5'

TIE-IN DETAIL

EARTHEN CONTAINMENT DIKE TO FLOOD PROTECTION LEVEE

LEGEND

- EXISTING GROUND/WATER BOTTOM
- MARSH CREATION (FILL)
- ENHANCED SPOIL BANK
- EARTHEN CONTAINMENT DIKE
- BORROW AREA
- EXISTING FLOOD PROTECTION LEVEE

NOTES:

1. NO EXCAVATION SHALL BE PERMITTED WITHIN 25 FEET OF THE TOE OF THE FLOOD PROTECTION LEVEE.
2. THE CONTRACTOR IS RESPONSIBLE FOR THE INTEGRITY AND MAINTENANCE OF ALL CONTAINMENT DIKES DURING CONSTRUCTION TO FACILITATE THE PLACEMENT OF DREDGED MATERIAL AS SHOWN IN THE PLANS.
3. CHANGES IN THE EARTHEN CONTAINMENT DIKE AND ENHANCED SPOIL BANK SIDE SLOPES SHALL BE AT NO DIRECT PAY.
4. ALL CONTAINMENT DIKES SHALL BE CONSTRUCTED TO THE CROWN TOLERANCES SHOWN IN THE PLANS.

REV.	DATE	DESCRIPTION	BY

LOUISIANA DEPARTMENT OF NATURAL RESOURCES
COASTAL ENGINEERING DIVISION
617 NORTH 3RD STREET
BATON ROUGE, LOUISIANA 70802

DRAWN BY: KRISTI CANTU
DESIGNED BY: WHITNEY THOMPSON

MISSISSIPPI RIVER SEDIMENT DELIVERY SYSTEM - BAYOU DUPONT

STATE PROJECT NUMBER: BA-39
FEDERAL PROJECT NUMBER: BA-39
APPROVED BY: LUKE LEBAS, P.E.

EARTHEN CONTAINMENT DETAILS

DATE: AUGUST 2008
SHEET 12 OF 24

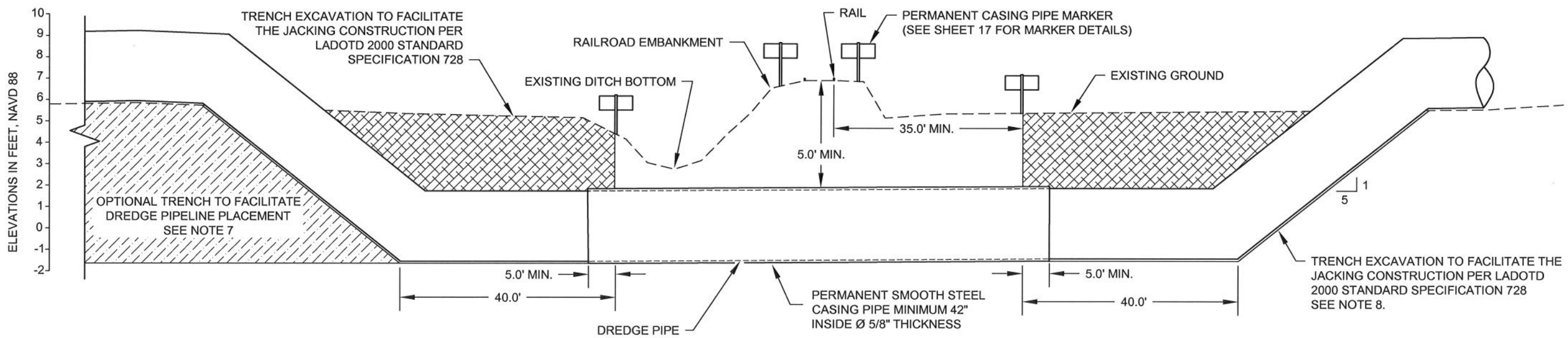

RAILROAD CROSSING DETAIL

HORIZONTAL: 1" = 20'
VERTICAL: 1" = 5'

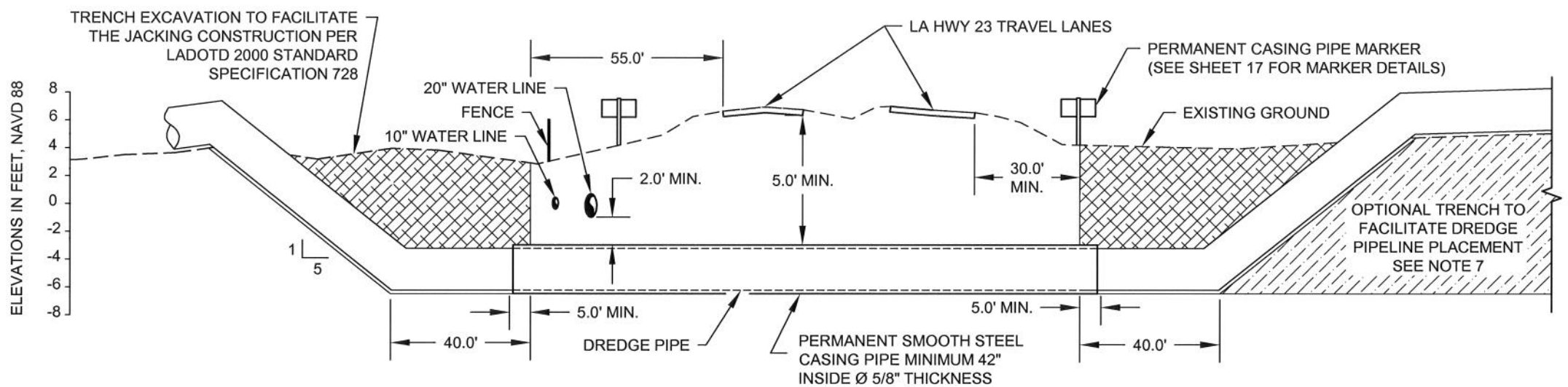

HIGHWAY CROSSING DETAIL

HORIZONTAL: 1" = 40'
VERTICAL: 1" = 10'

NOTES:

1. THE CONTRACTOR SHALL JACK THE MINIMUM 42" STEEL CASING PIPE UNDER THE NEW ORLEANS AND GULF COAST RAILROAD AND THE TRAVEL LANES OF LOUISIANA HIGHWAY 23 AS PER SECTION TS-1.7 AND IN ACCORDANCE WITH LADOTD 2000 STANDARD SPECIFICATION 728. CASING PIPE DIAMETER SHALL BE NO GREATER THAN 48".
2. THE CASING PIPE SHALL BE MADE OF SMOOTH STEEL, ASTM A 139 GRADE B, WITH MINIMUM YIELD STRENGTH OF 35,000 PSI AND SHALL BE COATED WITH COAL TAR EPOXY-POLYAMIDE PAINT, IN ACCORDANCE WITH THE LADOTD 2000 STANDARD SPECIFICATION 1008.04.
3. ALL COSTS ASSOCIATED WITH THE EXCAVATION AND PLACEMENT OF THE CASING PIPE SHALL BE PAID PER BID ITEM NO. 4, "JACKED CASING PIPE".
4. SEE SECTIONS TS-1.6 AND TS-1.7 OF THE SPECIFICATIONS FOR INFORMATION REGARDING DREDGE PIPELINE CROSSINGS.
5. BORING LOG B-5B MAY BE FOUND IN APPENDIX G OF SPECIFICATIONS.
6. THE 35' MINIMUM JACK PIT DISTANCE SHOWN IS BASED ON THE PROPOSED ALIGNMENT SHOWN ON SHEET 7 AND THE STANDARD RAILROAD SPECIFICATIONS WHICH ARE INCLUDED IN APPENDIX I OF THE SPECIFICATIONS.
7. OPTIONAL TRENCH TO BE PAID UNDER BID ITEM NO. 1, MOBILIZATION AND DEMOBILIZATION. SEE TS-1.4.
8. TRENCH EXCAVATION SIDE SLOPES ARE SHOWN FOR INFORMATIONAL PURPOSES ONLY.

LEGEND

- — — — EXISTING GROUND/WATER BOTTOM
- TRENCH EXCAVATION
- OPTIONAL TRENCH

REV.	DATE	DESCRIPTION	BY

LOUISIANA DEPARTMENT OF NATURAL RESOURCES
COASTAL ENGINEERING DIVISION
617 NORTH 3RD STREET
BATON ROUGE, LOUISIANA 70802

DRAWN BY: KRISTI CANTU
DESIGNED BY: WHITNEY THOMPSON

MISSISSIPPI RIVER SEDIMENT DELIVERY SYSTEM - BAYOU DUPONT

STATE PROJECT NUMBER: BA-39
FEDERAL PROJECT NUMBER: BA-39
APPROVED BY: LUKE LEBAS, P.E.

RAILROAD & HIGHWAY CROSSING DETAILS

DATE: AUGUST 2008
SHEET 13 OF 24

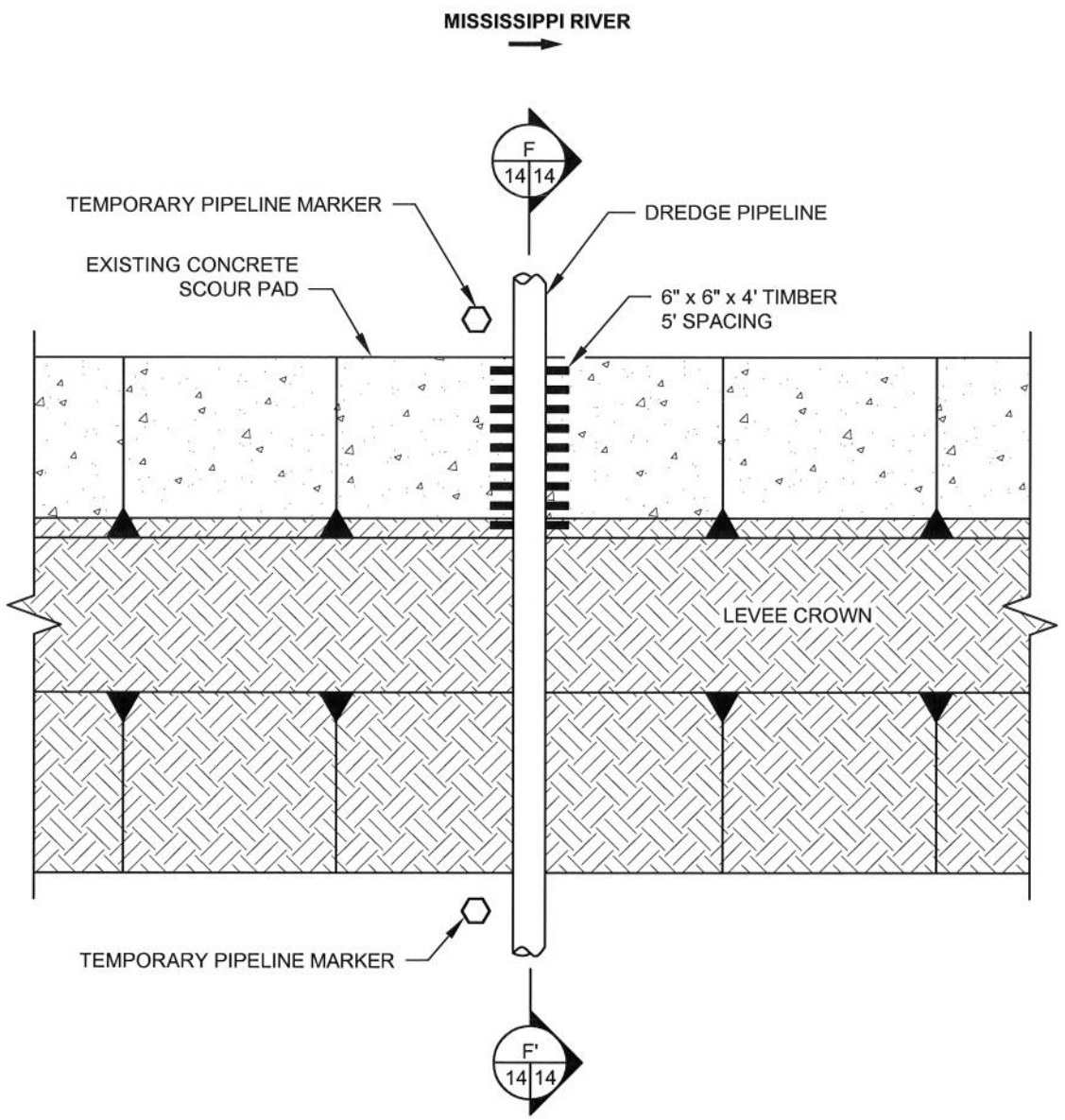

MISSISSIPPI RIVER LEVEE
PLAN VIEW
NOT TO SCALE

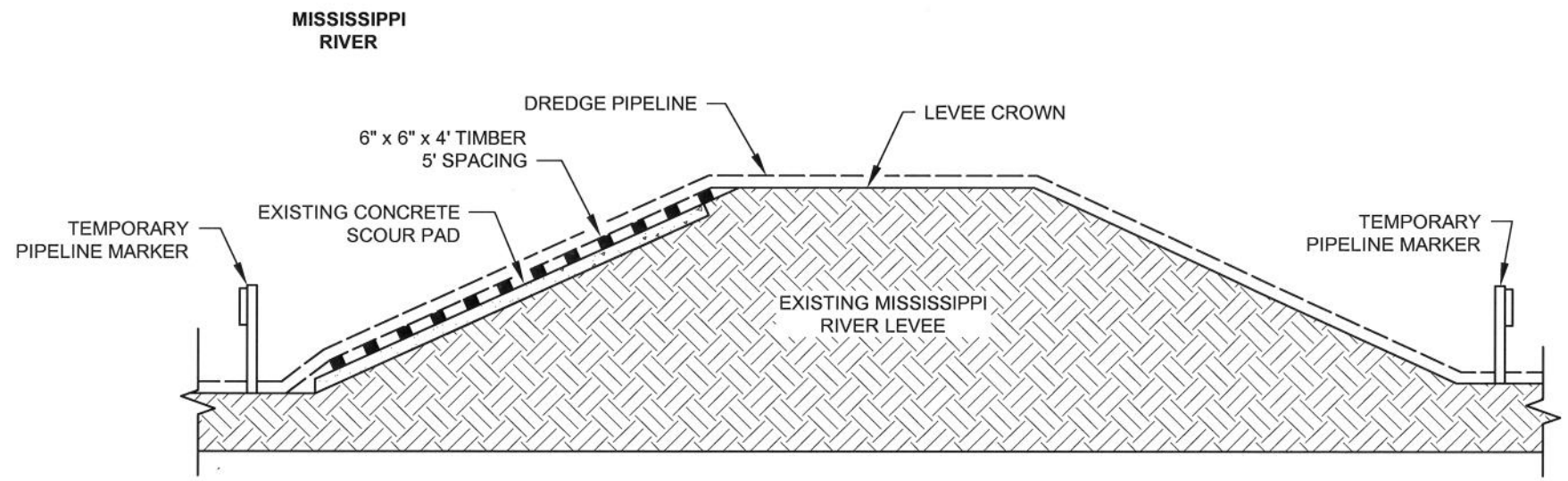

SECTION F-F'
NOT TO SCALE

NOTES:
1. TEMPORARY PIPELINE MARKERS INDICATING OWNER, CONTENTS, AND ADDRESS FOR CONTACTING OWNER SHALL BE PLACED AND MAINTAINED AT EACH TOE OF THE LEVEE NEAR DREDGE PIPELINE.
2. ALL COSTS ASSOCIATED WITH DREDGE PIPELINE CROSSING CONSTRUCTION SHALL BE PAID PER BID ITEM NUMBER 1 "MOBILIZATION AND DEMOBILIZATION".
3. SEE SECTION TS-1.6 OF THE SPECIFICATIONS FOR INFORMATION REGARDING DREDGE PIPELINE CROSSINGS.

REV.	DATE	DESCRIPTION	BY

LOUISIANA DEPARTMENT OF NATURAL RESOURCES
COASTAL ENGINEERING DIVISION
617 NORTH 3RD STREET
BATON ROUGE, LOUISIANA 70802

DRAWN BY: KRISTI CANTU
DESIGNED BY: WHITNEY THOMPSON

MISSISSIPPI RIVER SEDIMENT DELIVERY SYSTEM - BAYOU DUPONT

STATE PROJECT NUMBER: BA-39
FEDERAL PROJECT NUMBER: BA-39
APPROVED BY: LUKE LEBAS, P.E.

MISSISSIPPI RIVER LEVEE CROSSING DETAILS

DATE: JULY 2008
SHEET 14 OF 24

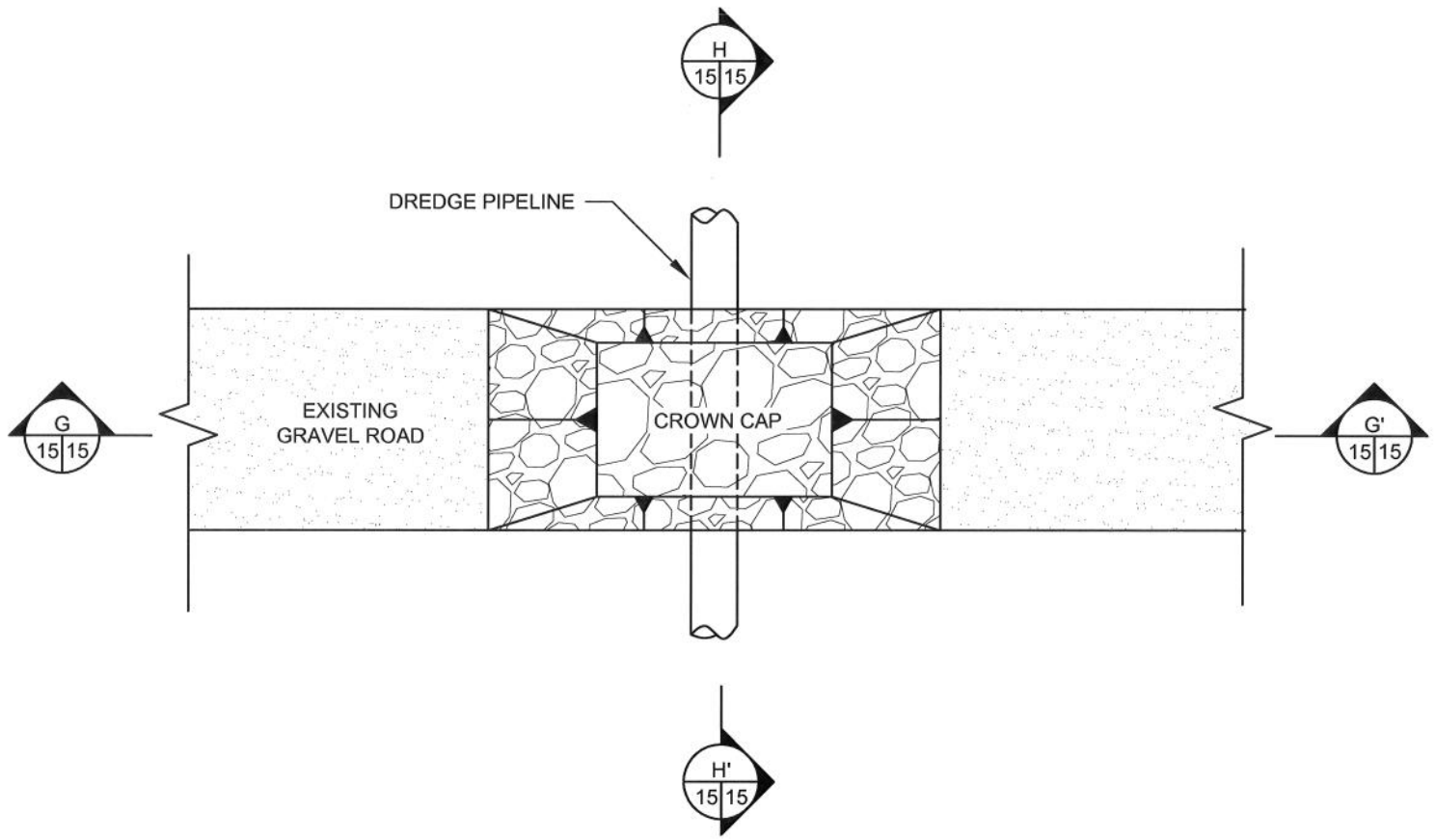

GRAVEL ROAD CROSSING
PLAN VIEW
NOT TO SCALE

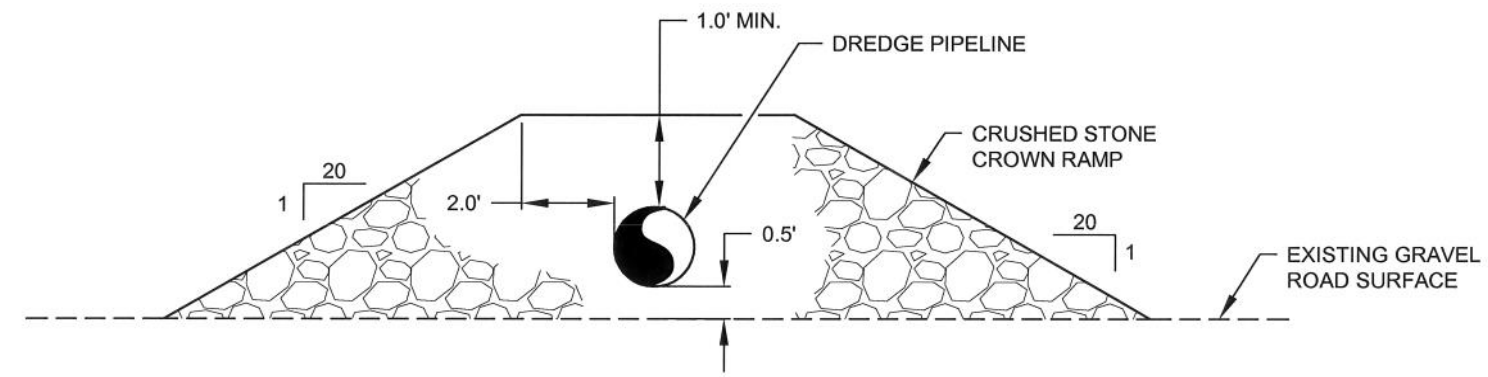

SECTION G-G'
NOT TO SCALE

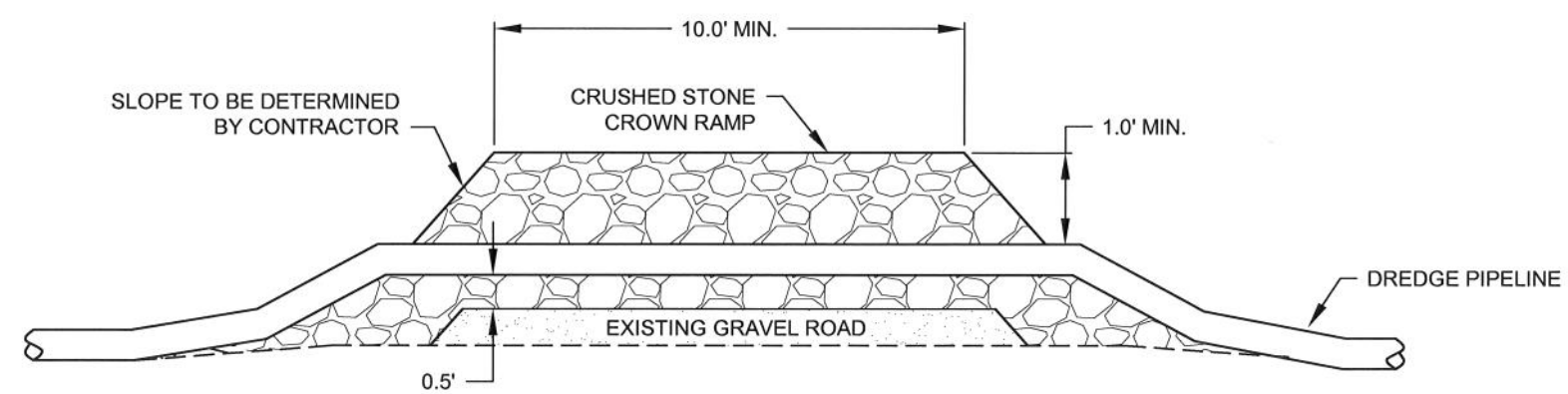

SECTION H-H'
NOT TO SCALE

NOTES:
1. MISSISSIPPI RIVER LEVEE INSPECTION ROAD IS AT THE LANDSIDE TOE OF THE LEVEE AS SHOWN IN DETAIL B ON SHEET 7.
2. THE CROWN RAMP OVER THE DREDGE PIPELINE CROSSINGS SHALL CONSIST OF CRUSHED STONE FOR FULL WIDTH (10' MINIMUM) AND LENGTH OF RAMP. THE CRUSHED STONE MATERIAL SHALL CONFORM TO LADOTD 2000 STANDARD SPECIFICATION 1003.04 (a).
3. TEMPORARY PIPELINE MARKERS INDICATING OWNER, CONTENTS, AND ADDRESS FOR CONTACTING OWNER SHALL BE PLACED AND MAINTAINED AT EACH TOE OF THE LEVEE NEAR DREDGE PIPELINE.
4. ALL COSTS ASSOCIATED WITH DREDGE PIPELINE CROSSING CONSTRUCTION SHALL BE PAID PER BID ITEM NUMBER 1 "MOBILIZATION AND DEMOBILIZATION".
5. SEE SECTION TS-1.6 OF THE SPECIFICATIONS FOR INFORMATION REGARDING DREDGE PIPELINE CROSSINGS.
6. CONTRACTOR MAY USE CROSSING DETAIL SHOWN FOR CATTLE CROSSINGS, DIRT ROAD CROSSINGS, GRAVEL ROAD CROSSINGS, AND DRIVEWAY CROSSINGS. EARTHEN MATERIAL MAY BE SUBSTITUTED FOR ROCK FOR CATTLE CROSSINGS.

MISSISSIPPI RIVER LEVEE INSPECTION ROAD

REV.	DATE	DESCRIPTION	BY

LOUISIANA DEPARTMENT OF NATURAL RESOURCES
COASTAL ENGINEERING DIVISION
617 NORTH 3RD STREET
BATON ROUGE, LOUISIANA 70802

DRAWN BY: KRISTI CANTU
DESIGNED BY: WHITNEY THOMPSON

MISSISSIPPI RIVER SEDIMENT DELIVERY SYSTEM - BAYOU DUPONT
STATE PROJECT NUMBER: BA-39
FEDERAL PROJECT NUMBER: BA-39
APPROVED BY: LUKE LEBAS, P.E.

MISSISSIPPI RIVER LEVEE INSPECTION ROAD CROSSING DETAILS
DATE: AUGUST 2008
SHEET 15 OF 24

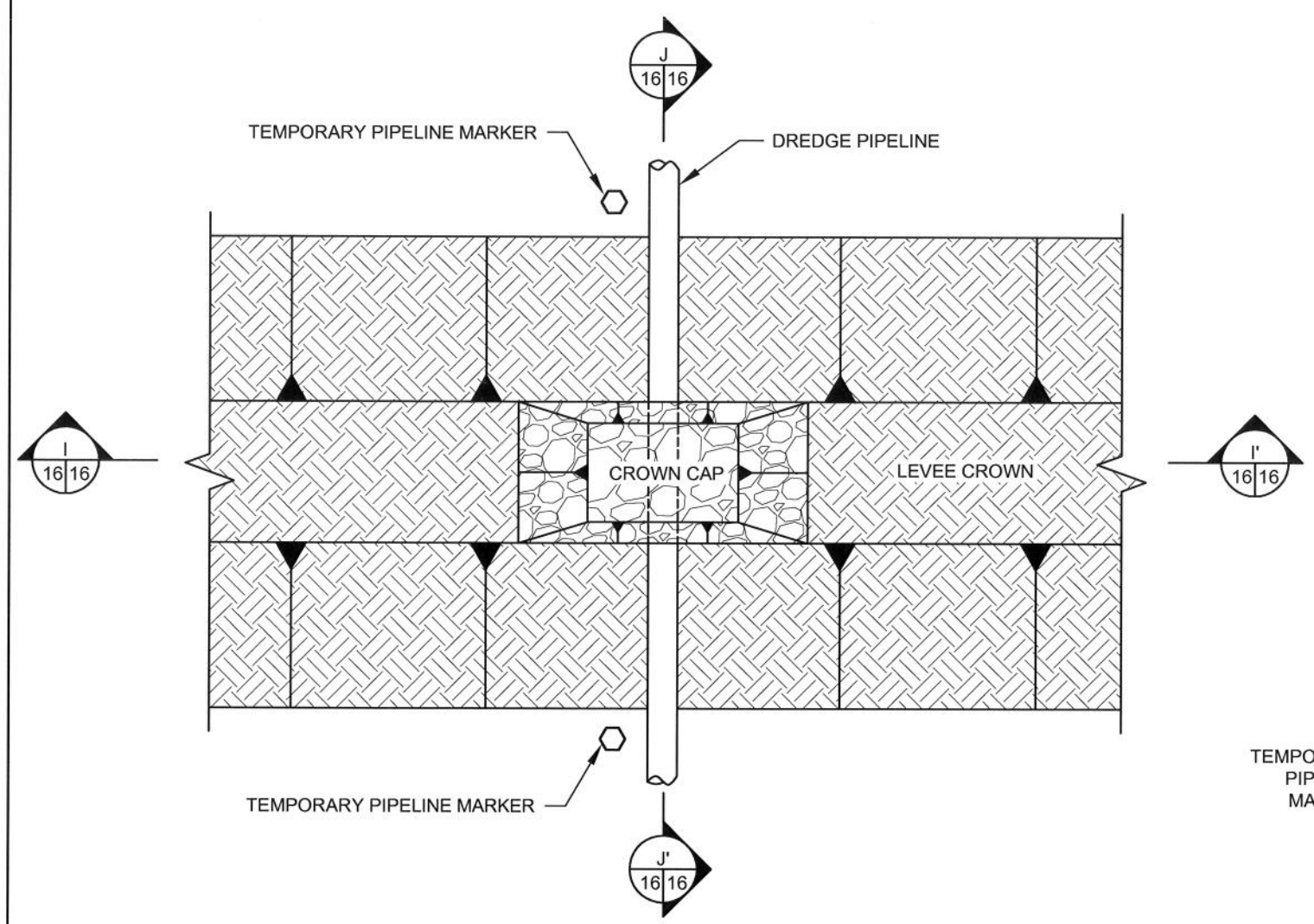

PLAN VIEW
NOT TO SCALE

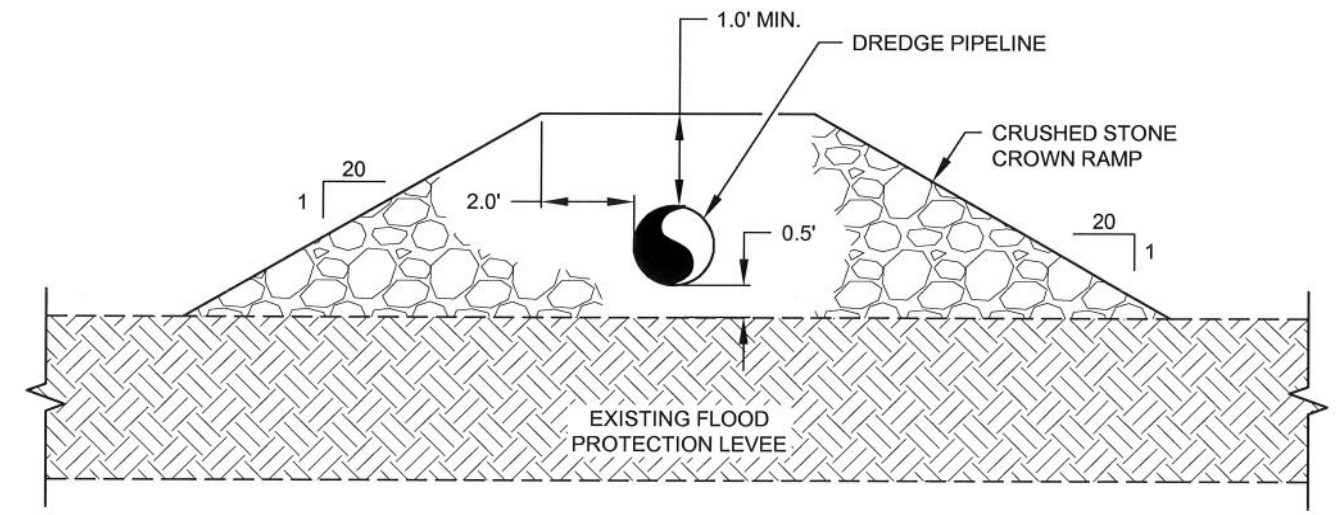

SECTION I-I'
NOT TO SCALE

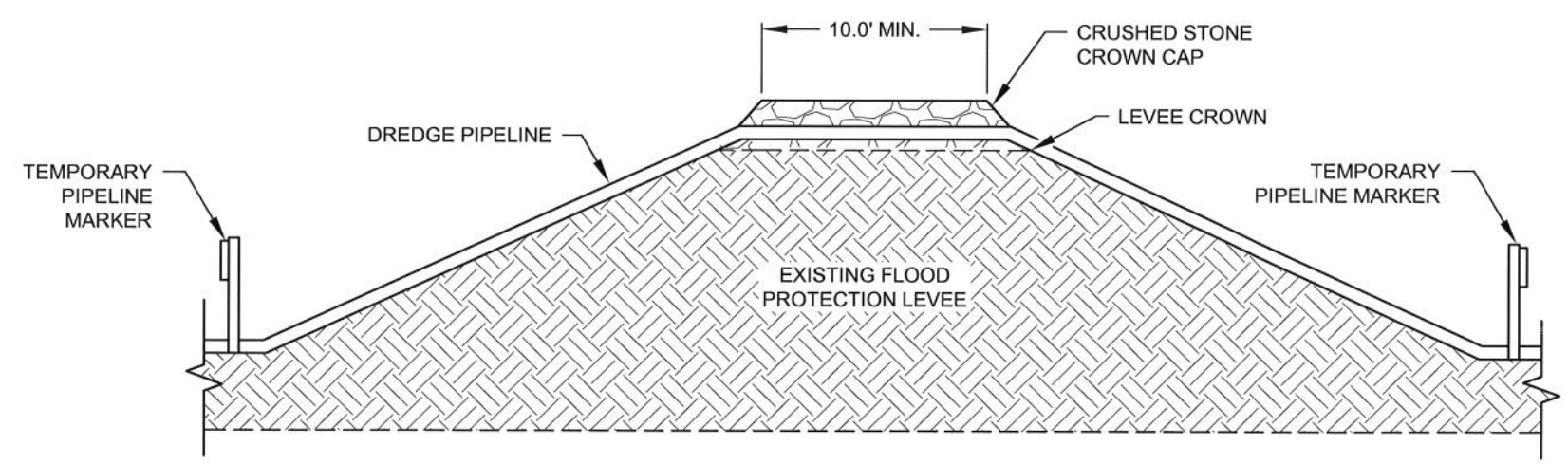

SECTION J-J'
NOT TO SCALE

NOTES:
1. THE CROWN RAMP OVER THE DREDGE PIPELINE CROSSINGS SHALL CONSIST OF CRUSHED STONE FOR FULL WIDTH (10' MINIMUM) AND LENGTH OF RAMP. THE CRUSHED STONE MATERIAL SHALL CONFORM TO LADOTD 2000 STANDARD SPECIFICATION 1003.04 (a).
2. TEMPORARY PIPELINE MARKERS INDICATING OWNER, CONTENTS, AND ADDRESS FOR CONTACTING OWNER SHALL BE PLACED AND MAINTAINED AT EACH TOE OF THE LEVEE NEAR DREDGE PIPELINE.
3. ALL COSTS ASSOCIATED WITH DREDGE PIPELINE CROSSING CONSTRUCTION SHALL BE PAID PER BID ITEM NO. 1 "MOBILIZATION AND DEMOBILIZATION".
4. SEE SECTION TS-1.6 OF THE SPECIFICATIONS FOR INFORMATION REGARDING DREDGE PIPELINE CROSSINGS.

PLAQUEMINES PARISH FLOOD PROTECTION LEVEE

REV.	DATE	DESCRIPTION	BY

LOUISIANA DEPARTMENT OF NATURAL RESOURCES
COASTAL ENGINEERING DIVISION
617 NORTH 3RD STREET
BATON ROUGE, LOUISIANA 70802

DRAWN BY: KRISTI CANTU
DESIGNED BY: WHITNEY THOMPSON

MISSISSIPPI RIVER SEDIMENT DELIVERY SYSTEM - BAYOU DUPONT

STATE PROJECT NUMBER: BA-39
FEDERAL PROJECT NUMBER: BA-39
APPROVED BY: LUKE LEBAS, P.E.

FLOOD PROTECTION LEVEE CROSSING DETAILS

DATE: JULY 2008
SHEET 16 OF 24

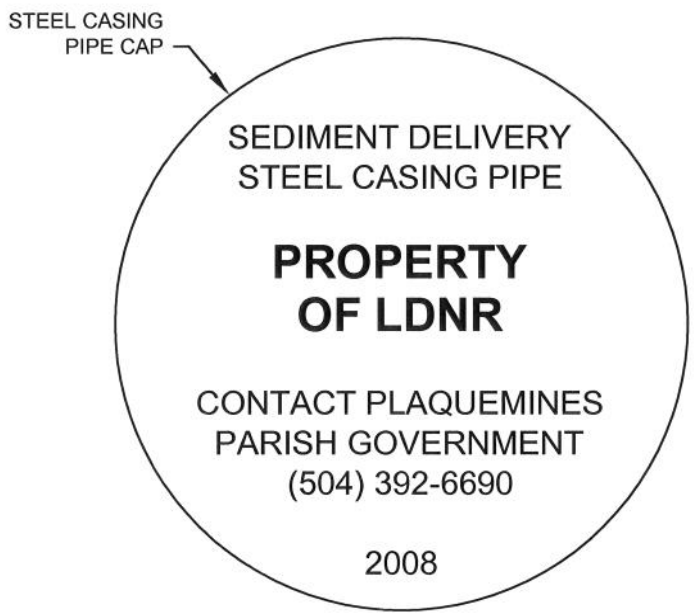

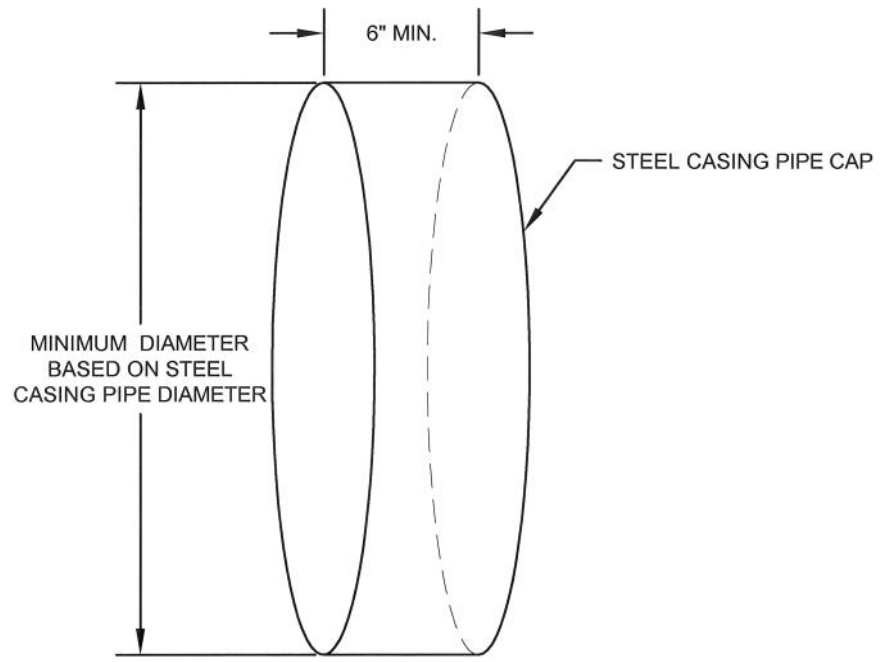

CASING PIPE CAP DETAIL

NOT TO SCALE

NOTES:
1. STEEL CASING PIPE CAPS SHALL BE 1/2" THICK AND SHALL BE COATED WITH COAL TAR EPOXY-POLYAMIDE PAINT, IN ACCORDANCE WITH THE LADOTD 2000 STANDARD SPECIFICATION 1008.04.
2. CAPS SHALL BE INSTALLED IN ACCORDANCE WITH CONSTRUCTION SPECIFICATIONS AFTER DREDGING OPERATIONS ARE COMPLETE, MARSH FILL ELEVATION HAS BEEN ACCEPTED, AND DREDGE SLURRY PIPELINE HAS BEEN REMOVED. CAPS SHALL BE WELDED TO CASING PIPE AND SHALL BE WATER TIGHT.
3. ALL COSTS ASSOCIATED WITH CASING PIPE CAPS SHALL BE PAID FOR PER BID ITEM NO. 1, "MOBILIZATION AND DEMOBILIZATION".

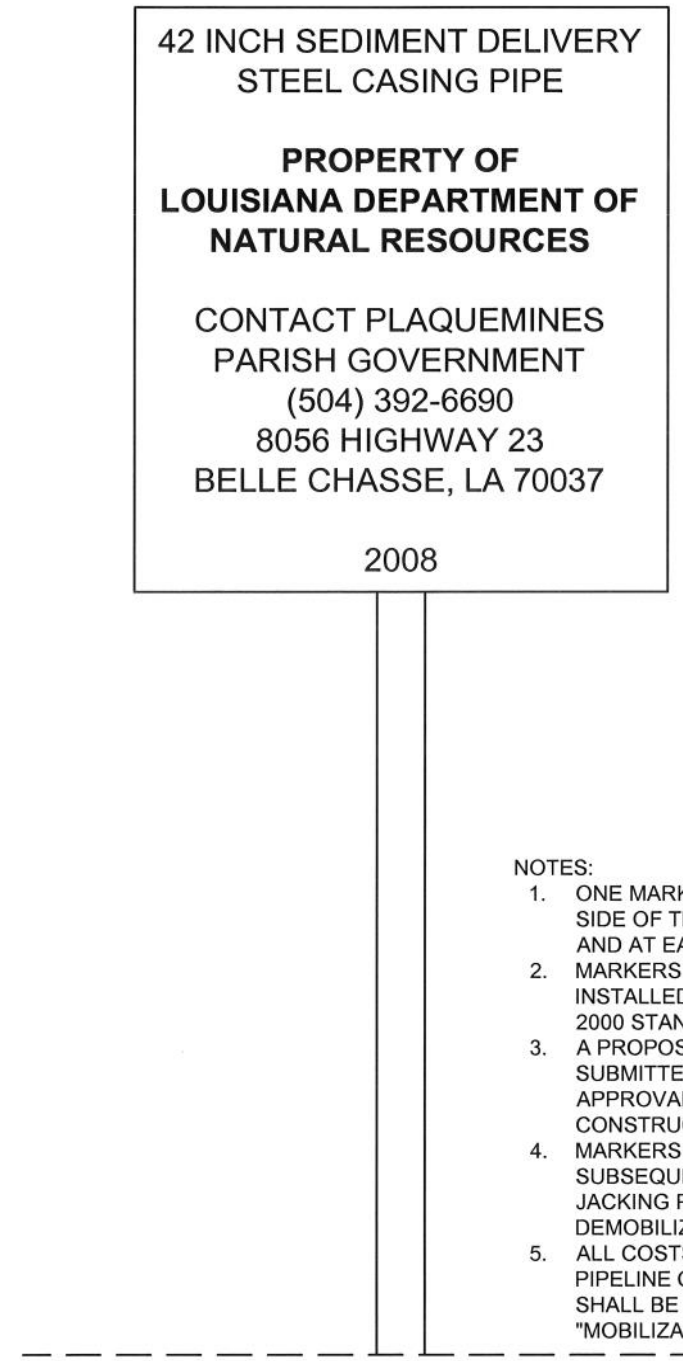

NOTES:
1. ONE MARKER SHALL BE PLACED ON EACH SIDE OF THE RAILROAD AND HIGHWAY AND AT EACH END OF THE CASING PIPES.
2. MARKERS SHALL BE CONSTRUCTED AND INSTALLED IN ACCORDANCE WITH LADOTD 2000 STANDARD SPECIFICATION 729.
3. A PROPOSED DRAWING SHALL BE SUBMITTED TO THE ENGINEER FOR APPROVAL IN THE WORK PLAN PRIOR TO CONSTRUCTION.
4. MARKERS SHALL BE PLACED SUBSEQUENT TO BACKFILLING THE JACKING PIT AND PRIOR TO DEMOBILIZATION.
5. ALL COSTS ASSOCIATED WITH DREDGE PIPELINE CROSSING CONSTRUCTION SHALL BE PAID PER BID ITEM NUMBER 1 "MOBILIZATION AND DEMOBILIZATION".

CASING PIPE MARKER DETAIL

NOT TO SCALE

REV.	DATE	DESCRIPTION	BY

LOUISIANA DEPARTMENT OF NATURAL RESOURCES
COASTAL ENGINEERING DIVISION
617 NORTH 3RD STREET
BATON ROUGE, LOUISIANA 70802

DRAWN BY: KRISTI CANTU
DESIGNED BY: WHITNEY THOMPSON

MISSISSIPPI RIVER SEDIMENT DELIVERY SYSTEM - BAYOU DUPONT

STATE PROJECT NUMBER: BA-39
FEDERAL PROJECT NUMBER: BA-39
APPROVED BY: LUKE LEBAS, P.E.

CASING PIPE CAP AND MARKER DETAILS

DATE: AUGUST 2008
SHEET 17 OF 24

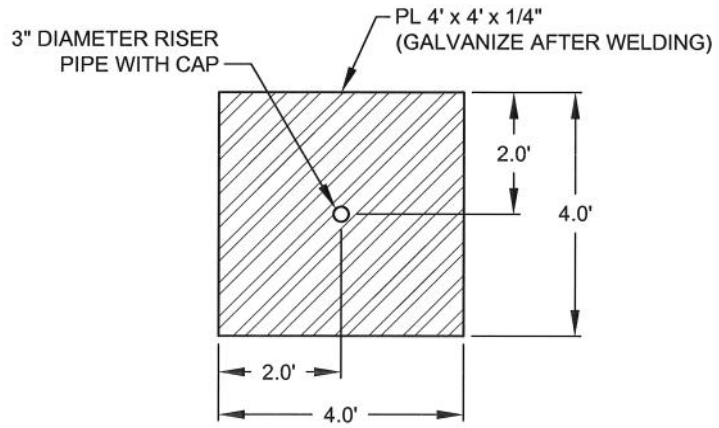

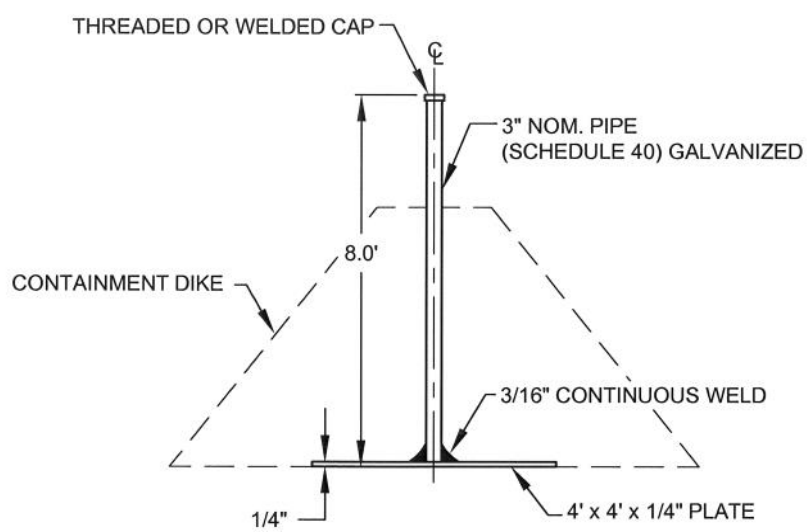

EARTHEN CONTAINMENT DIKE
SETTLEMENT PLATE
NOT TO SCALE

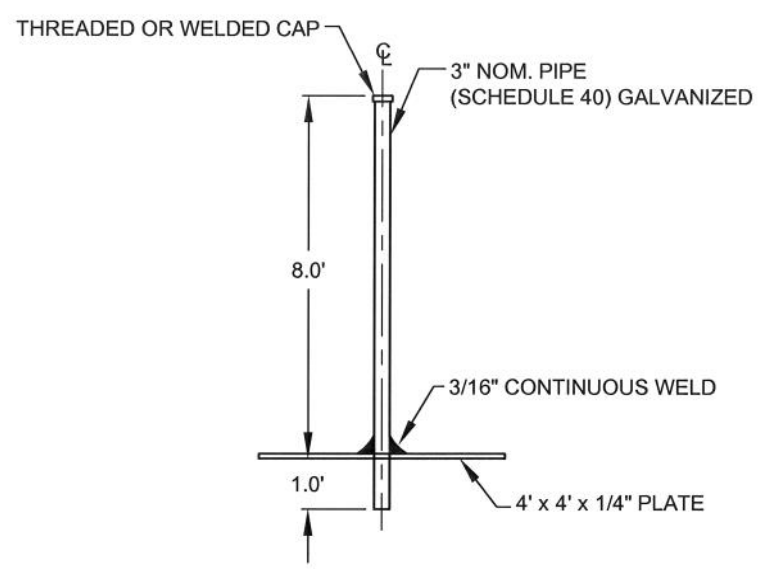

MARSH CREATION
SETTLEMENT PLATE
NOT TO SCALE

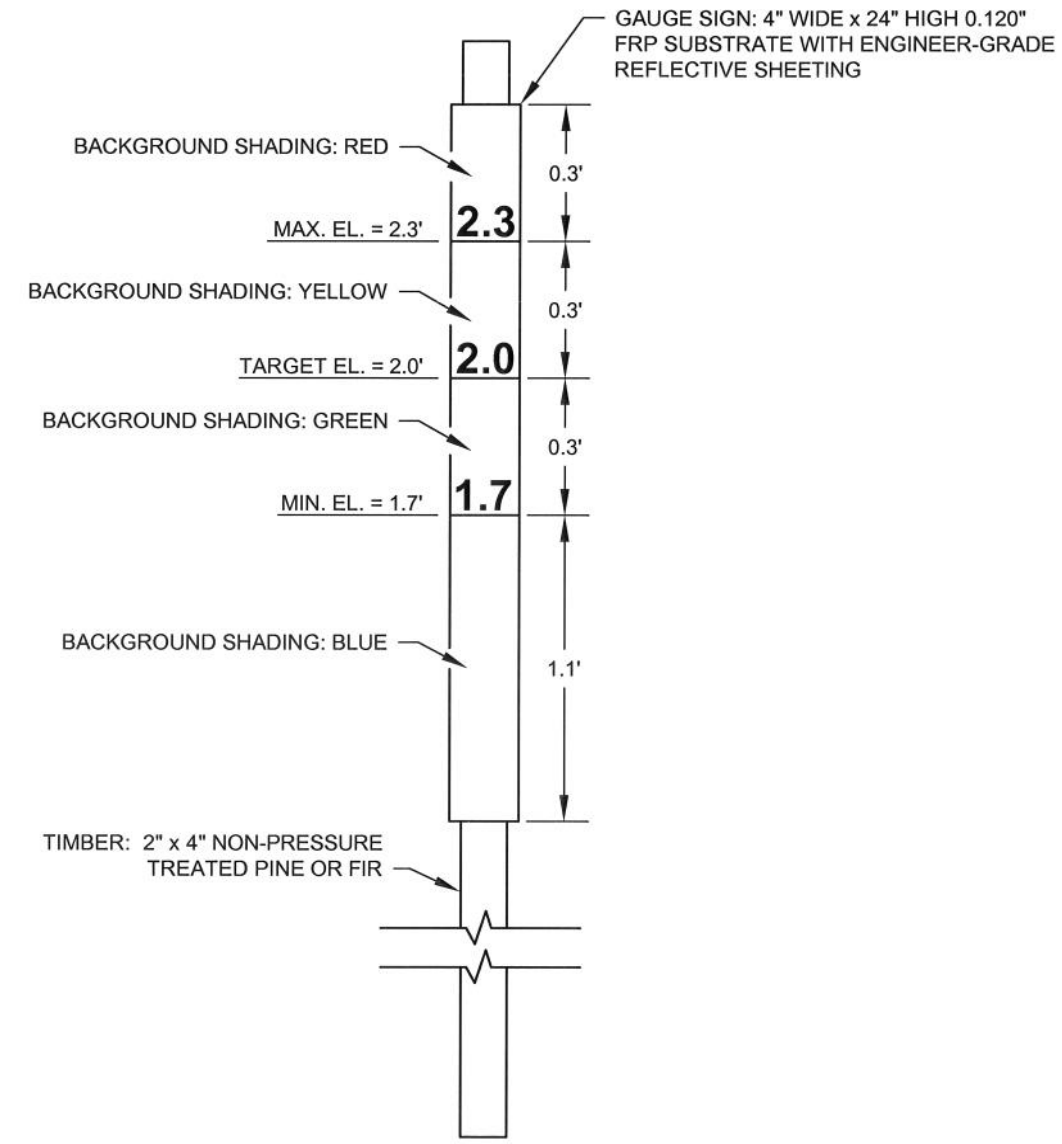

GRADE STAKE
NOT TO SCALE

GRADE STAKE NOTES:

1. SEE SPECIFICATION TS-4 "GRADE STAKES" FOR GRADE STAKE PLACEMENT.
2. THE SIGNS SHALL HAVE THE DIMENSIONS, NUMBERING , AND SHADING AS SHOWN.
3. THE GAUGE SIGN SHALL BE CONSTRUCTED OF 0.120" THICK FIBERGLASS REINFORCED PLASTIC (FRP) WHICH HAS BEEN UV STABILIZED FOR OUTDOOR WEATHERABILIY. THE FRP MATERIAL SHALL BE WHITE OR GRAY IN COLOR AND BE TOTALLY DIELECTRIC AND NON-CONDUCTIVE.
4. THE MARSH FILL GRADE STAKES SHALL HAVE ELEVATION DELINEATIONS FOR MINIMUM, TARGET, AND MAXIMUM ELEVATIONS AS STATED IN SECTION TS-4.2.
5. THIS WORK CONSISTS OF FURNISHING, ASSEMBLING, INSTALLING, AND REMOVING THE REQUIRED MATERIAL FOR GRADE STAKES IN ACCORDANCE WITH SPECIFICATION TS-4 "GRADE STAKES". THE GRADE STAKES SHALL BE USED BY THE CONTRACTOR TO MONITOR ELEVATIONS OF THE MARSH FILL WITHIN THE FILL AREA. IF AREAS ARE DEEMED INACCESSIBLE BY THE ENGINEER FOR PAYMENT SURVEYS AFTER PLACEMENT OF THE FILL, THE CONTRACTOR SHALL USE THE GRADE STAKES TO DETERMINE PAYMENT ELEVATIONS AND VOLUMES. IN SUCH CASE THE CONTRACTOR SHALL DETERMINE MARSH ELEVATION FROM VISUAL INSPECTIONS OF THE GRADE STAKES UNDER DIRECT SUPERVISION OF THE INSPECTOR.

SETTLEMENT PLATE NOTES:

1. SETTLEMENT PLATES SHALL BE HOT DIPPED GALVANIZED AFTER FABRICATION.
2. LOCATION AND ELEVATION WILL BE RECORDED DURING AS-BUILT SURVEY.
3. FOR INSTALLATION METHOD REFER TO TS-7 OF THE PROJECT SPECIFICATIONS.
4. SEE SHEET 8 FOR SETTLEMENT PLATE LOCATIONS.

REV.	DATE	DESCRIPTION	BY

LOUISIANA DEPARTMENT OF NATURAL RESOURCES
COASTAL ENGINEERING DIVISION
617 NORTH 3RD STREET
BATON ROUGE, LOUISIANA 70802

MISSISSIPPI RIVER SEDIMENT DELIVERY SYSTEM - BAYOU DUPONT

STATE PROJECT NUMBER: BA-39

FEDERAL PROJECT NUMBER: BA-39

SETTLEMENT PLATE AND GRADE STAKE DETAILS

DATE: AUGUST 2008

DRAWN BY: KRISTI CANTU | DESIGNED BY: WHITNEY THOMPSON | APPROVED BY: LUKE LEBAS, P.E.

SHEET 18 OF 24

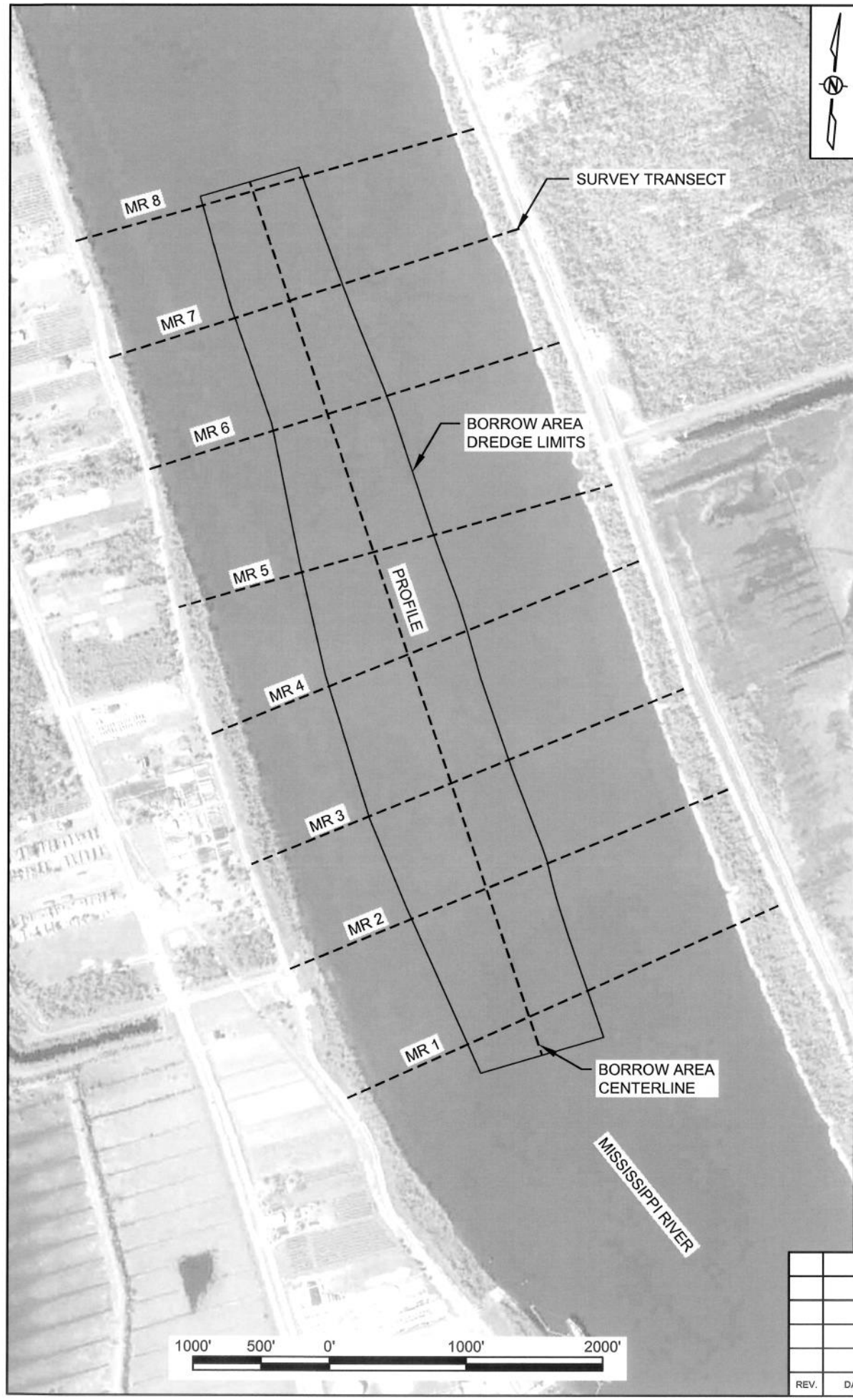

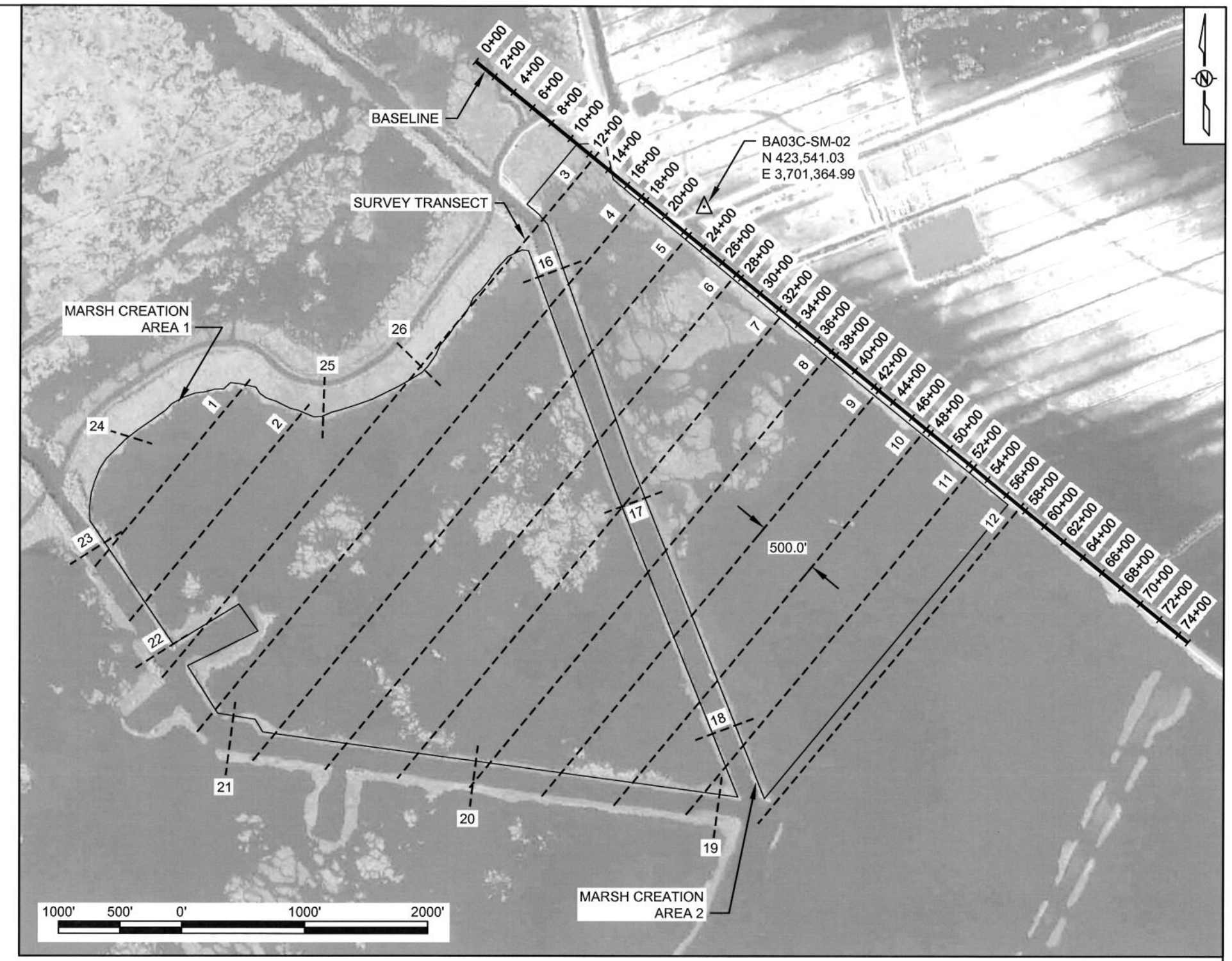

NOTES:

1. THE CONTRACTOR SHALL SURVEY BOTH THE BORROW AREA AND FILL AREAS AT THE LOCATIONS SHOWN AS PER SECTION TS-3.
2. FILL AREA SURVEYS WERE PERFORMED IN FEBRUARY 2005 BY T. BAKER SMITH & SONS.
3. BORROW AREA SURVEYS WERE PERFORMED IN 2003 BY USACE.
4. SURVEY SECTIONS POINT FILES ARE AVAILABLE UPON REQUEST.
5. SEE APPENDIX E OF THE SPECIFICATIONS FOR SECONDARY MONUMENT DATA SHEETS.
6. SEE SHEET 20 FOR THE BORROW AREA SECTIONS.
7. SEE SHEETS 21-24 FOR THE FILL AREA SECTIONS.

LEGEND

- BASELINE
- SURVEY TRANSECT
- SECONDARY MONUMENT

REV.	DATE	DESCRIPTION	BY

LOUISIANA DEPARTMENT OF NATURAL RESOURCES
COASTAL ENGINEERING DIVISION
617 NORTH 3RD STREET
BATON ROUGE, LOUISIANA 70802

DRAWN BY: KRISTI CANTU
DESIGNED BY: WHITNEY THOMPSON

MISSISSIPPI RIVER SEDIMENT DELIVERY SYSTEM - BAYOU DUPONT

STATE PROJECT NUMBER: BA-39
FEDERAL PROJECT NUMBER: BA-39
APPROVED BY: LUKE LEBAS, P.E.

SURVEY LAYOUT

DATE: AUGUST 2008
SHEET 19 OF 24

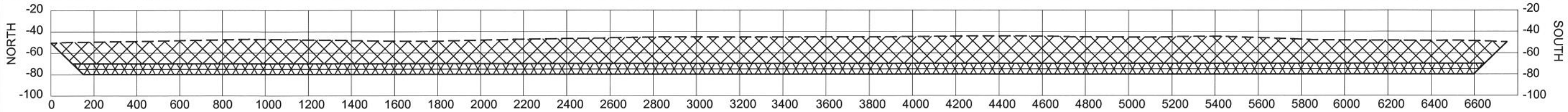

BORROW PROFILE

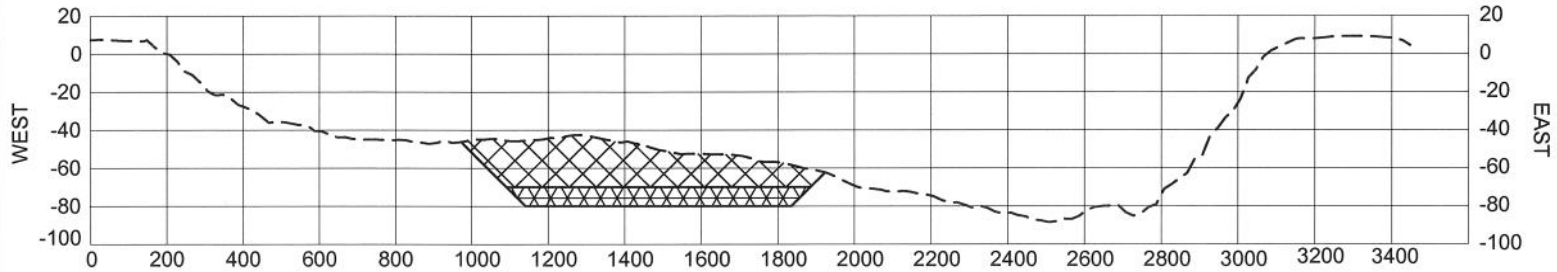

TRANSECT MR 1

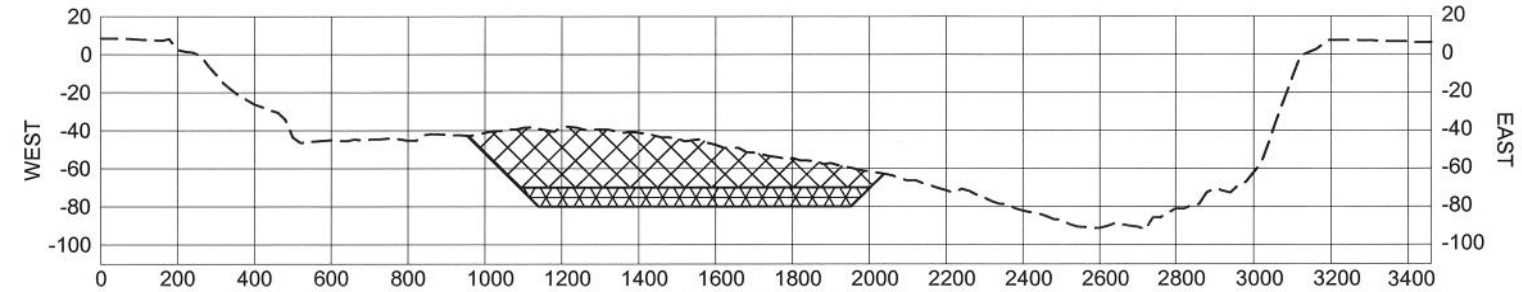

TRANSECT MR 2

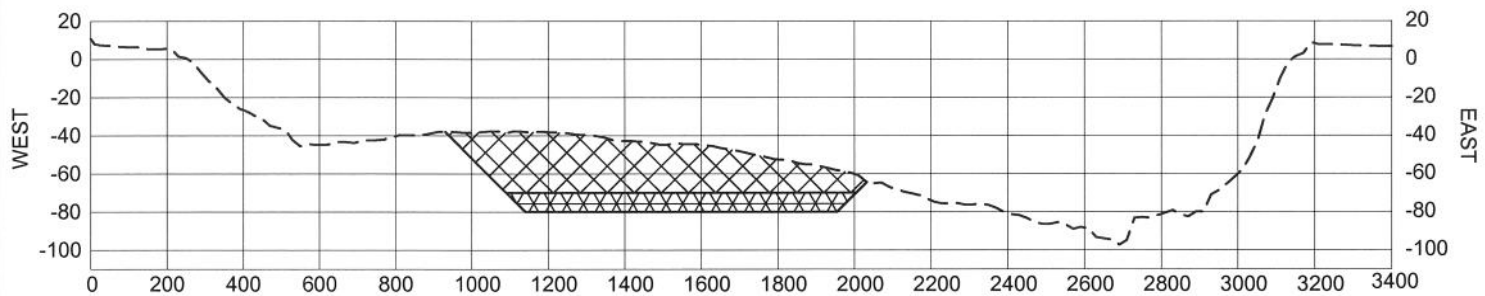

TRANSECT MR 3

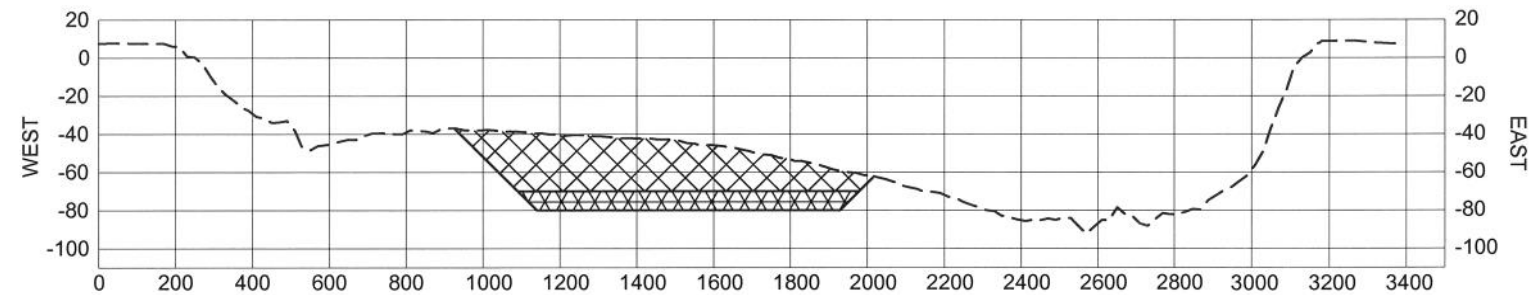

TRANSECT MR 4

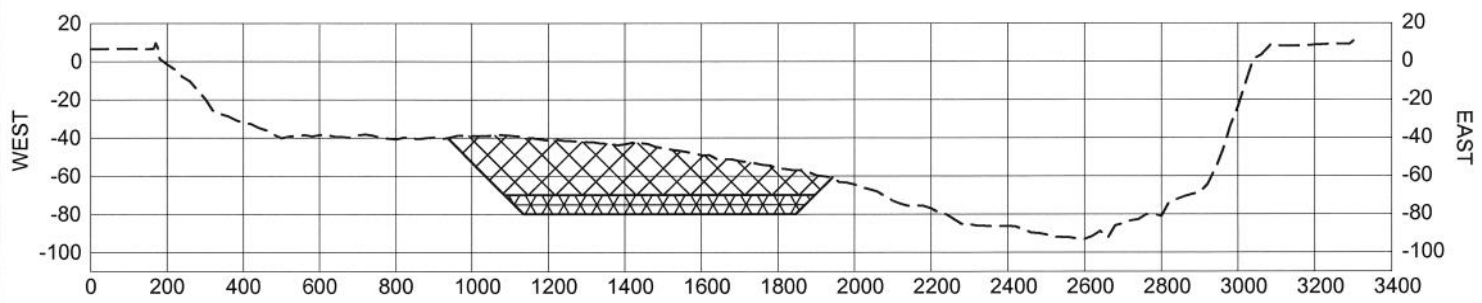

TRANSECT MR 5

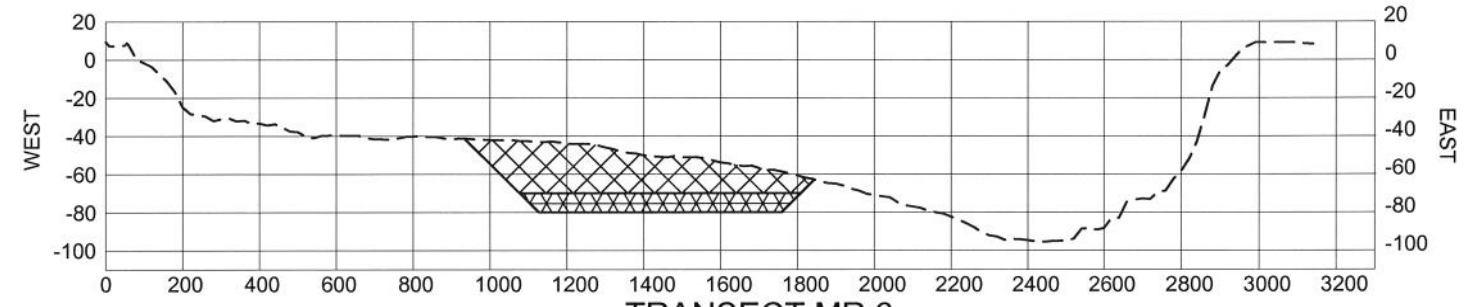

TRANSECT MR 6

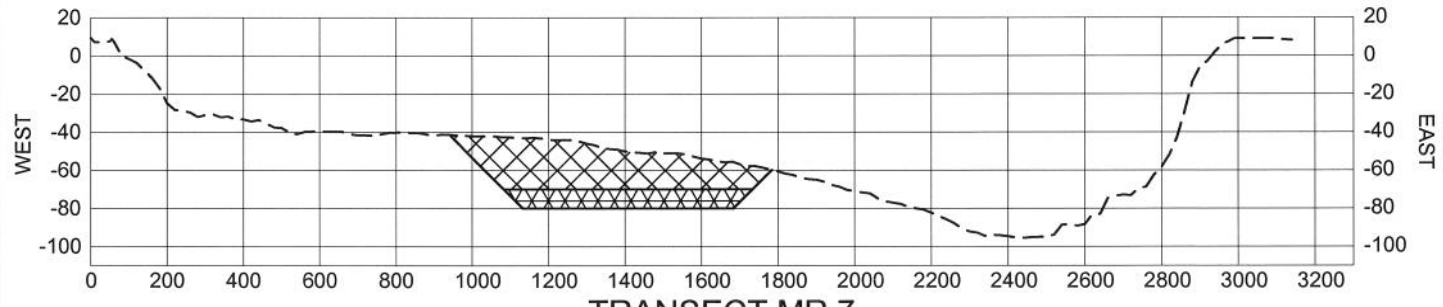

TRANSECT MR 7

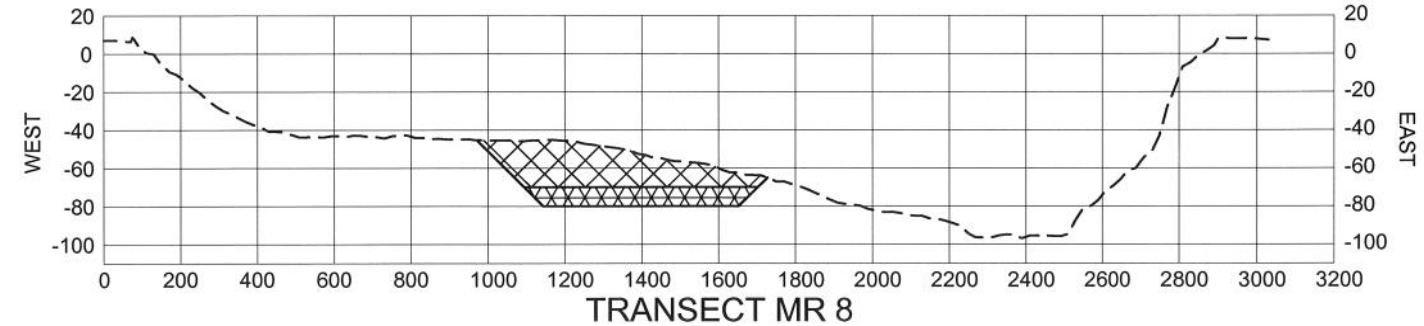

TRANSECT MR 8

NOTE:
ALL ELEVATIONS ARE GIVEN IN THE NORTH AMERICAN VERTICAL DATUM OF 1988 (NAVD 88).

HORIZONTAL GRAPHIC SCALE
500' 250' 0 500' 1000'

VERTICAL GRAPHIC SCALE
100' 50' 0 100' 200'

LEGEND

- EXISTING RIVER BOTTOM
- MARSH CUT
- ALLOWABLE OVERDREDGE

REV.	DATE	DESCRIPTION	BY

LOUISIANA DEPARTMENT OF NATURAL RESOURCES
COASTAL ENGINEERING DIVISION
617 NORTH 3RD STREET
BATON ROUGE, LOUISIANA 70802

DRAWN BY: KRISTI CANTU
DESIGNED BY: WHITNEY THOMPSON

MISSISSIPPI RIVER SEDIMENT DELIVERY SYSTEM - BAYOU DUPONT

STATE PROJECT NUMBER: BA-39
FEDERAL PROJECT NUMBER: BA-39
APPROVED BY: LUKE LEBAS, P.E.

BORROW AREA SECTIONS

DATE: AUGUST 2008
SHEET 20 OF 24

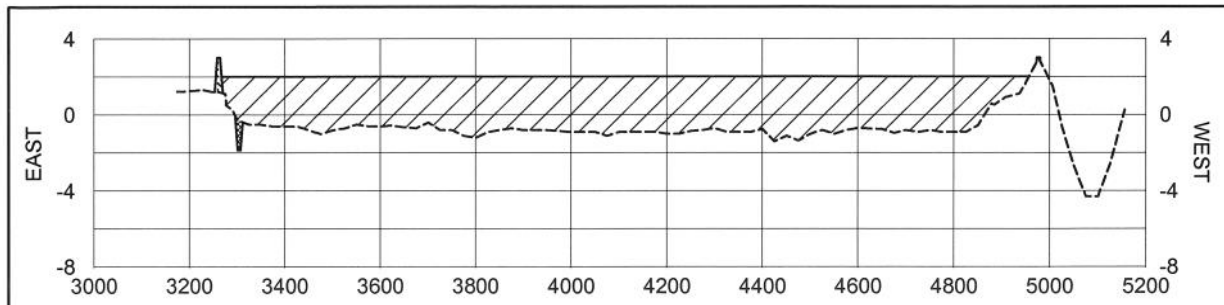

TRANSECT 1

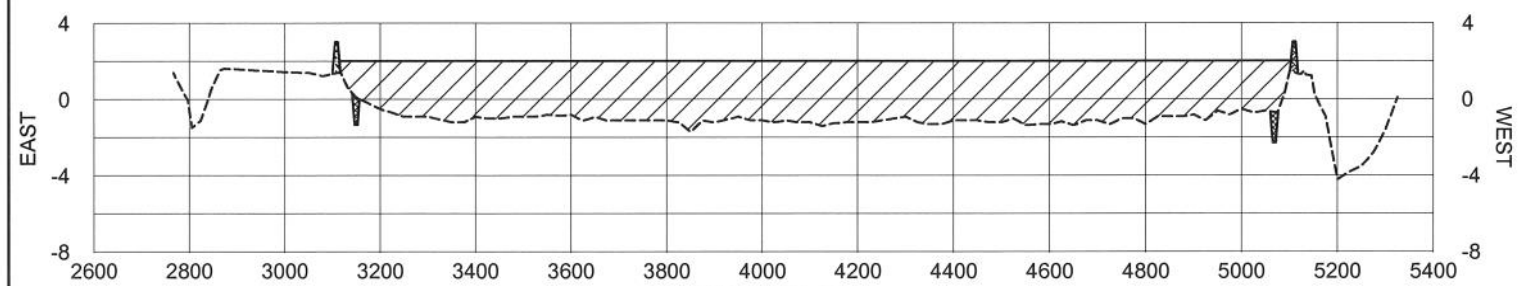

TRANSECT 2

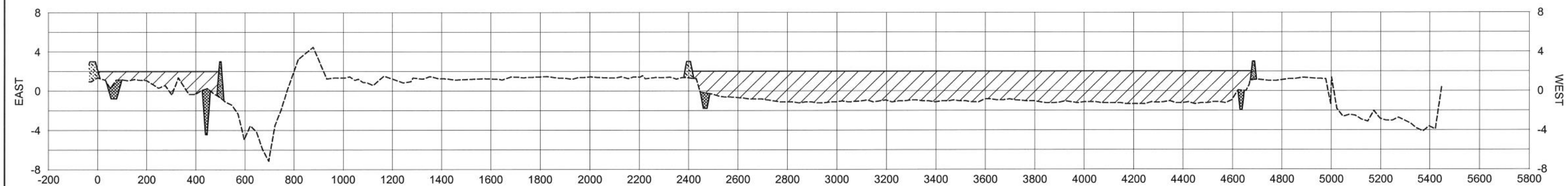

TRANSECT 3

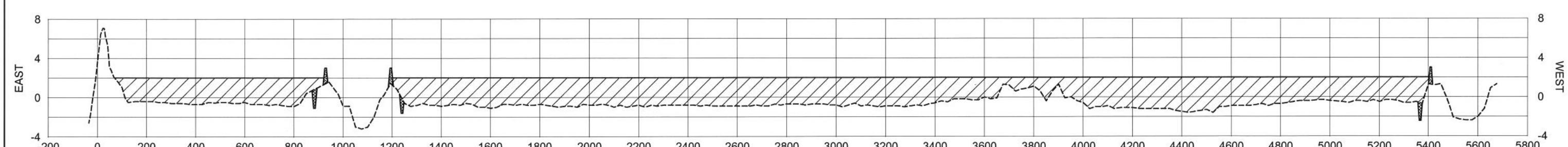

TRANSECT 4

NOTE:
ALL ELEVATIONS ARE GIVEN IN THE NORTH AMERICAN VERTICAL DATUM OF 1988 (NAVD 88).

HORIZONTAL GRAPHIC SCALE
400' 200' 0 400' 800'
10' 5' 0 10' 20'
VERTICAL GRAPHIC SCALE

LEGEND

- ----- EXISTING BOTTOM
- ENHANCED SPOIL BANK
- EARTHEN CONTAINMENT DIKE
- BORROW AREA
- MARSH CREATION

REV.	DATE	DESCRIPTION	BY

LOUISIANA DEPARTMENT OF NATURAL RESOURCES
COASTAL ENGINEERING DIVISION
617 NORTH 3RD STREET
BATON ROUGE, LOUISIANA 70802

DRAWN BY: KRISTI CANTU
DESIGNED BY: WHITNEY THOMPSON

MISSISSIPPI RIVER SEDIMENT DELIVERY SYSTEM - BAYOU DUPONT

STATE PROJECT NUMBER: BA-39
FEDERAL PROJECT NUMBER: BA-39
APPROVED BY: LUKE LEBAS, P.E.

FILL AREA SECTIONS

DATE: AUGUST 2008
SHEET 21 OF 24

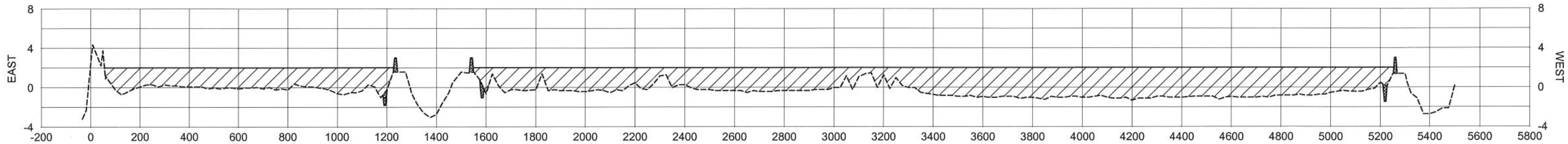

TRANSECT 5

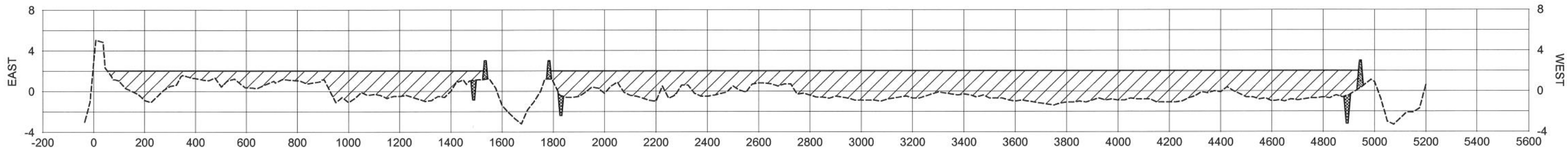

TRANSECT 6

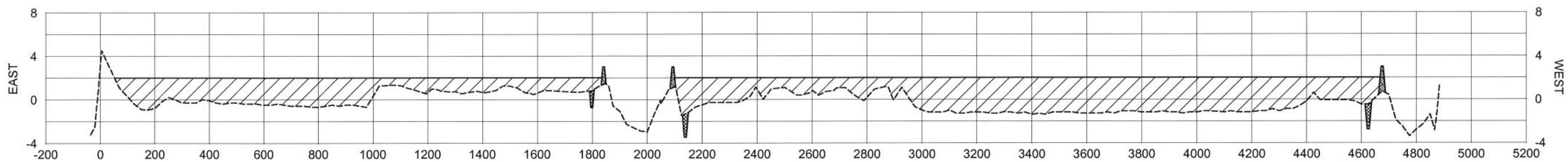

TRANSECT 7

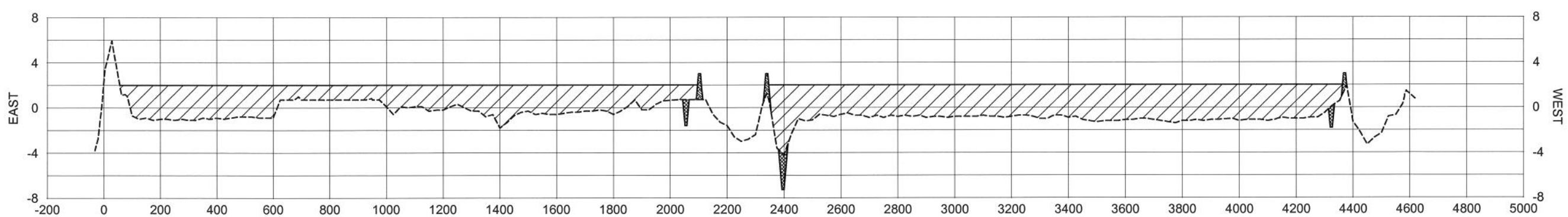

TRANSECT 8

LEGEND

- ----- EXISTING BOTTOM
- ENHANCED SPOIL BANK
- BORROW AREA
- MARSH CREATION

NOTE:
ALL ELEVATIONS ARE GIVEN IN THE NORTH AMERICAN VERTICAL DATUM OF 1988 (NAVD 88).

HORIZONTAL GRAPHIC SCALE
400' 200' 0 400' 800'
10' 5' 0 10' 20'
VERTICAL GRAPHIC SCALE

REV.	DATE	DESCRIPTION	BY

LOUISIANA DEPARTMENT OF NATURAL RESOURCES
COASTAL ENGINEERING DIVISION
617 NORTH 3RD STREET
BATON ROUGE, LOUISIANA 70802

DRAWN BY: KRISTI CANTU
DESIGNED BY: WHITNEY THOMPSON

MISSISSIPPI RIVER SEDIMENT DELIVERY SYSTEM - BAYOU DUPONT

STATE PROJECT NUMBER: BA-39
FEDERAL PROJECT NUMBER: BA-39
APPROVED BY: LUKE LEBAS, P.E.

FILL AREA SECTIONS

DATE: AUGUST 2008
SHEET 22 OF 24

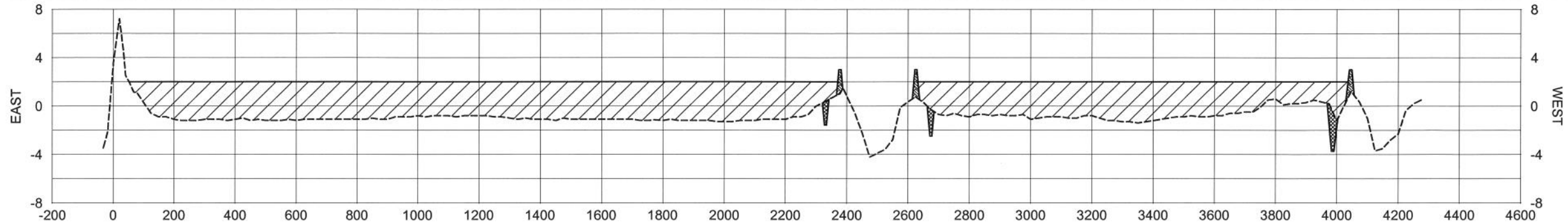

TRANSECT 9

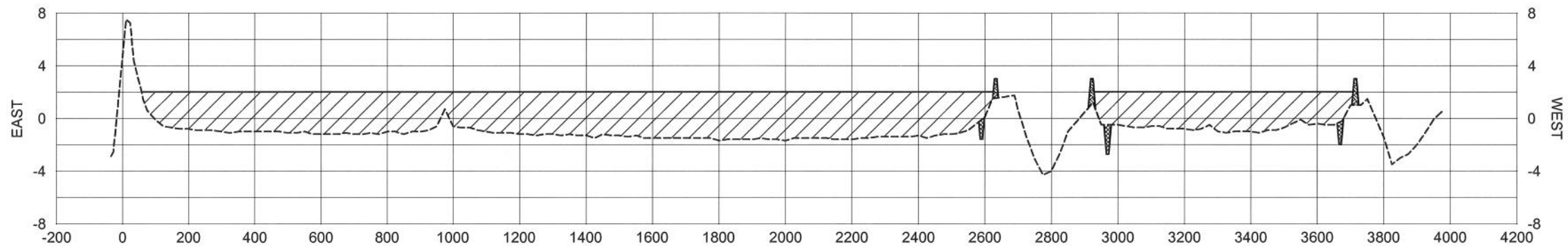

TRANSECT 10

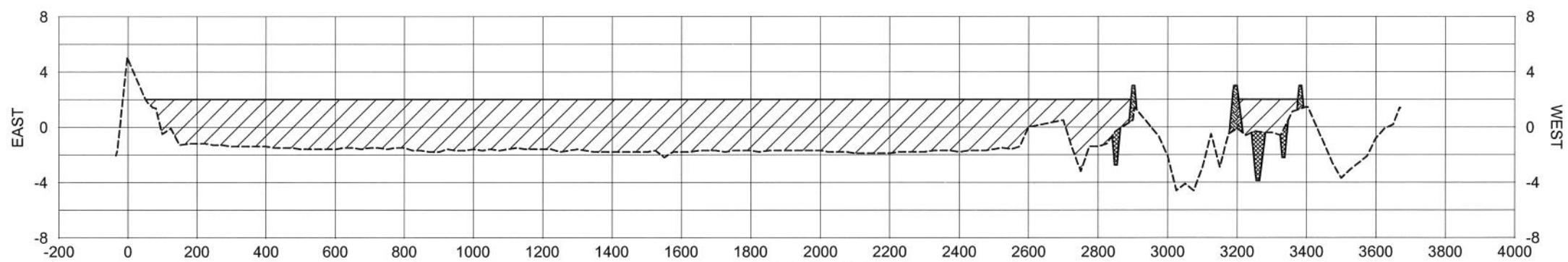

TRANSECT 11

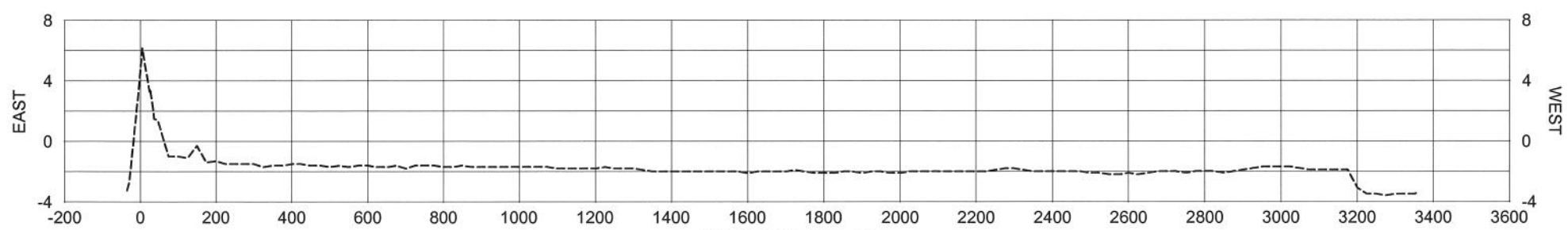

TRANSECT 12

LEGEND

- EXISTING BOTTOM
- ENHANCED SPOIL BANK
- EARTHEN CONTAINMENT DIKE
- BORROW AREA
- MARSH CREATION

NOTE:
ALL ELEVATIONS ARE GIVEN IN THE NORTH AMERICAN VERTICAL DATUM OF 1988 (NAVD 88).

HORIZONTAL GRAPHIC SCALE
400' 200' 0 400' 800'
10' 5' 0 10' 20'
VERTICAL GRAPHIC SCALE

REV.	DATE	DESCRIPTION	BY

LOUISIANA DEPARTMENT OF NATURAL RESOURCES
COASTAL ENGINEERING DIVISION
617 NORTH 3RD STREET
BATON ROUGE, LOUISIANA 70802

DRAWN BY: KRISTI CANTU
DESIGNED BY: WHITNEY THOMPSON

MISSISSIPPI RIVER SEDIMENT DELIVERY SYSTEM - BAYOU DUPONT

STATE PROJECT NUMBER: BA-39
FEDERAL PROJECT NUMBER: BA-39
APPROVED BY: LUKE LEBAS, P.E.

FILL AREA SECTIONS

DATE: AUGUST 2008
SHEET 23 OF 24

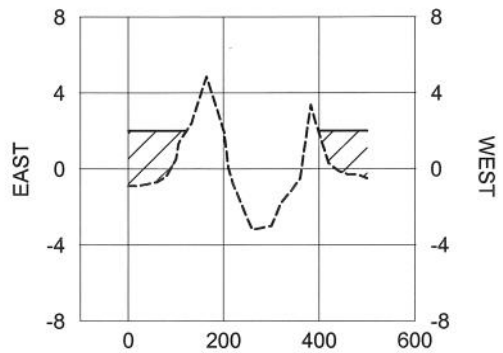

TRANSECT 16

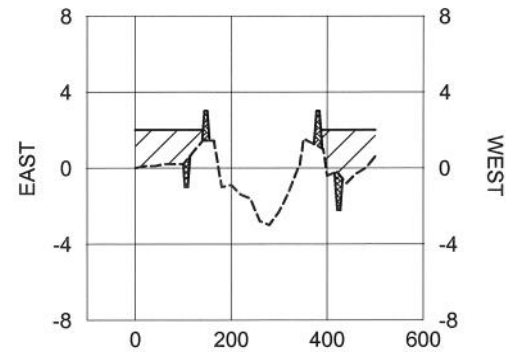

TRANSECT 17

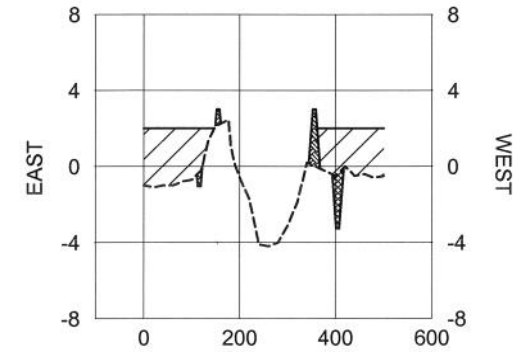

TRANSECT 18

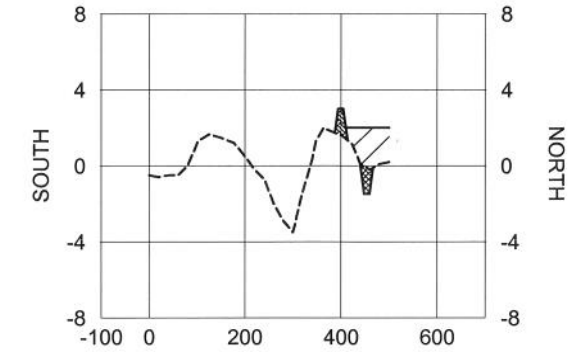

TRANSECT 19

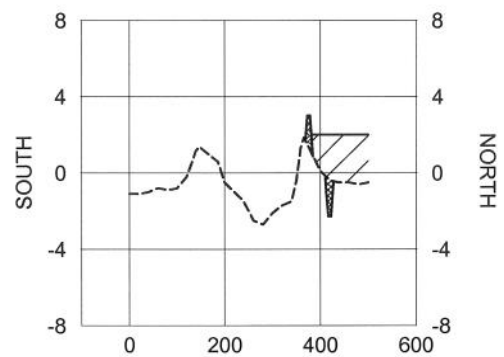

TRANSECT 20

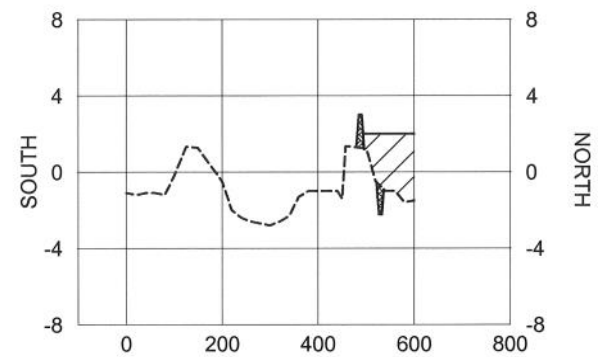

TRANSECT 21

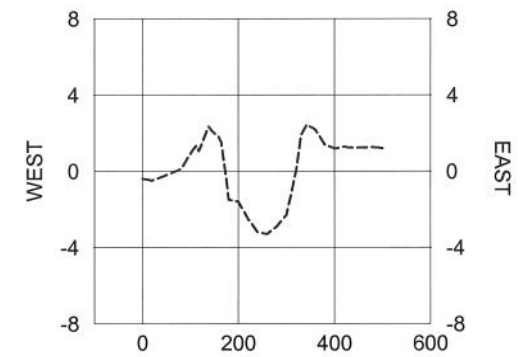

TRANSECT 22

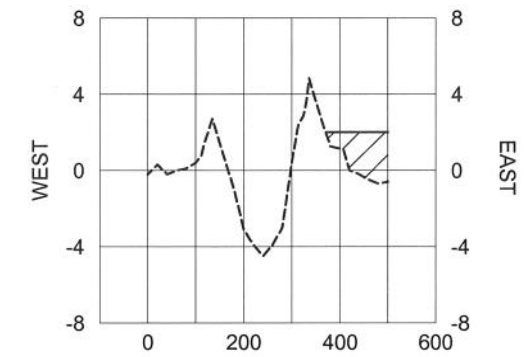

TRANSECT 23

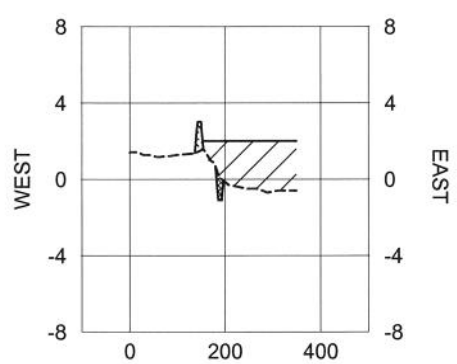

TRANSECT 24

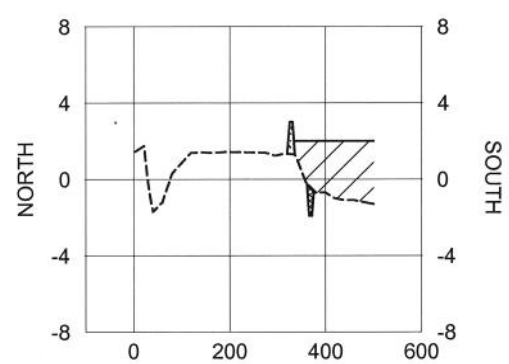

TRANSECT 25

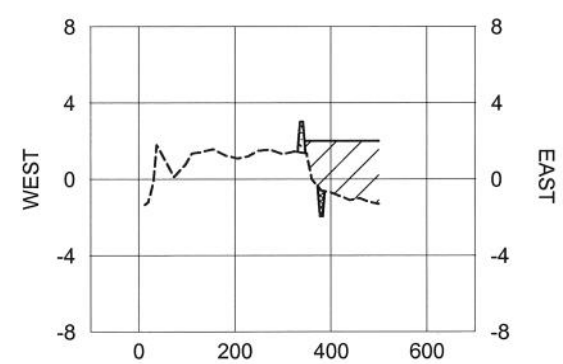

TRANSECT 26

LEGEND

- ----- EXISTING BOTTOM
- ENHANCED SPOIL BANK
- EARTHEN CONTAINMENT DIKE
- BORROW AREA
- MARSH CREATION

NOTE:
ALL ELEVATIONS ARE GIVEN IN THE NORTH AMERICAN VERTICAL DATUM OF 1988 (NAVD 88).

HORIZONTAL GRAPHIC SCALE
400' 200' 0 400' 800'
10' 5' 0 10' 20'
VERTICAL GRAPHIC SCALE

REV.	DATE	DESCRIPTION	BY

LOUISIANA DEPARTMENT OF NATURAL RESOURCES
COASTAL ENGINEERING DIVISION
617 NORTH 3RD STREET
BATON ROUGE, LOUISIANA 70802

DRAWN BY: KRISTI CANTU
DESIGNED BY: WHITNEY THOMPSON

MISSISSIPPI RIVER SEDIMENT DELIVERY SYSTEM - BAYOU DUPONT

STATE PROJECT NUMBER: BA-39
FEDERAL PROJECT NUMBER: BA-39
APPROVED BY: LUKE LEBAS, P.E.

FILL AREA SECTIONS

DATE: AUGUST 2008
SHEET 24 OF 24