STATE OF LOUISIANA
DEPARTMENT OF NATURAL RESOURCES
COASTAL ENGINEERING DIVISION

PASS CHALAND TO GRAND BAYOU PASS BARRIER SHORELINE RESTORATION

STATE PROJECT NO. BA-35

PLAQUEMINES PARISH, LOUISIANA

INDEX TO SHEETS

SHEET NO.	DESCRIPTION
1	TITLE SHEET
2	GENERAL NOTES
3	PROJECT LOCATION MAP AND LANDOWNER IDENTIFICATION
4 – 7	FILL AREA LAYOUT
8	SURVEY BASELINE, ACCESS AND WATER EXCHANGE CHANNEL, AND WORK AREA ALIGNMENT TABLES
9	BEACH/DUNE FILL, CONTAINMENT DIKE, AND BORROW AREA ALIGNMENT TABLES
10	DISPOSAL AREA, SETTLEMENT PLATE. AND WARNING SIGN ALIGNMENT TABLES
11	FILL AREA AND ACCESS CHANNEL TYPICAL SECTION
12	PASS CHALAND (PC) ACCESS CHANNEL CROSS SECTIONS
13	NAVIGATIONAL AND SHOAL SIGN DETAILS
14	MARSH CREATION GRADE STAKES AND SETTLEMENT PLATE DETAILS
15	SAND FENCING DETAILS
16	ACCESS CHANNEL AND FILL AREA SURVEY LAYOUT
17	BORROW AREA LAYOUT
18	OVERBURDEN DISPOSAL AREA
19	BORROW AREA CENTERLINE PROFILE
20	BORROW AREA AND OVERBURDEN DISPOSAL AREA CROSS SECTIONS
21	BORROW AREA SURVEY LAYOUT
22	OVERBURDEN DISPOSAL AREA SURVEY LAYOUT
23 – 24	PIPELINE SEARCH AREA
25 – 29	FILL AREA CROSS SECTIONS

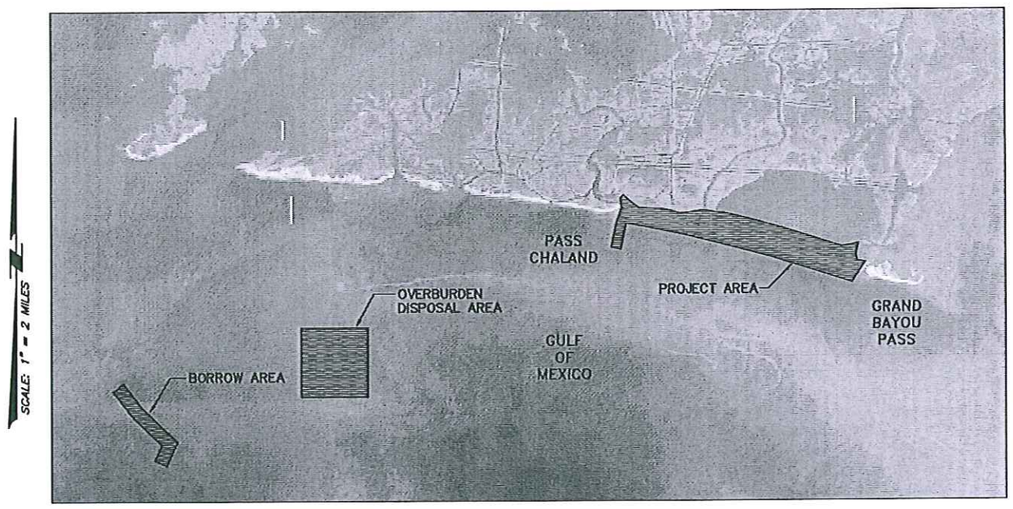

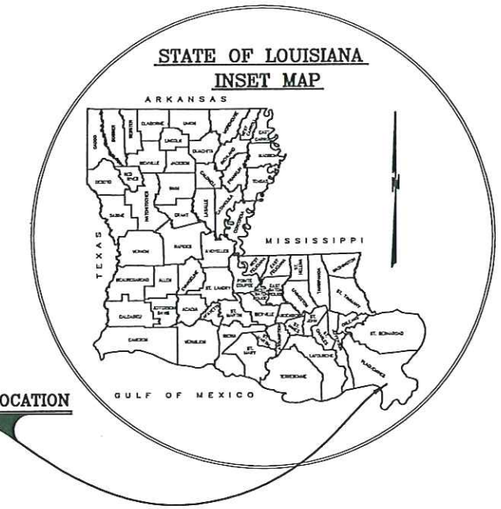

1 0.5 0 1 2

STATE PROJECT SPONSOR

FEDERAL PROJECT SPONSOR

TYPE OF CONSTRUCTION
CLASSIFICATION III (HEAVY CONSTRUCTION)
BARRIER ISLAND DUNE/MARSH RESTORATION

STATE OF LOUISIANA
T. MITCHELL ANDRUS
License No. 30246
PROFESSIONAL ENGINEER
IN
CIVIL ENGINEERING
11/30/07

STATE OF LOUISIANA
Robert L. Cangelosi, Jr.
REG. No. 23800
REGISTERED
PROFESSIONAL ENGINEER
IN
CIVIL ENGINEERING
12/3/07

CED DIRECTOR

CED ENGINEER MANAGER

CED PROJECT ENGINEER

SHEET: 1

REV.	DATE	BY	DESCRIPTION

DATE: OCT. 2007 | SHEET: 1 OF 29
DESIGNED: T.M.A. | DRAWN: R.P.G./J.S.D.
CHECKED: M.T.P. | SCALE: AS NOTED
STATE PROJECT NUMBER: BA-35
FEDERAL PROJECT NUMBER: BA-35
APPROVED BY: R.J.J.

LOUISIANA DEPARTMENT OF NATURAL RESOURCES
PASS CHALAND TO GRAND BAYOU PASS
BARRIER SHORELINE RESTORATION (BA-35)
TITLE SHEET

SJB GROUP LLC.
P.O. BOX 1751
BATON ROUGE, LA. 70821
PHONE (225) 769-3400
FAX (225) 769-3586

COASTAL ENGINEERING CONSULTANTS INC.
PH: (239) 643-2324
FAX: (239) 643-1143
3106 SOUTH HORSESHOE DRIVE
NAPLES, FLORIDA 34104

GENERAL NOTES

1. ALL ELEVATIONS ARE GIVEN IN THE NORTH AMERICAN VERTICAL DATUM OF 1988 (NAVD88-GEOID99) U.S. SURVEY FEET (FEET). ALL HORIZONTAL COORDINATES ARE GIVEN IN THE NORTH AMERICAN DATUM OF 1983 (NAD83, LOUISIANA STATE PLANE SOUTH ZONE U.S. FEET). ELEVATIONS BASED ON A BENCHMARK PROVIDED BY LDNR, "RONQUILLE 2 – 2005". ELEVATION = 6.06 FEET (NAVD88-GEOID03(05)), N: 297,126.23, E: 3,793,517.87 (NAD83, LSZ-1702). SEE APPENDIX A OF THE SPECIFICATIONS.

2. TOPOGRAPHIC AND BATHYMETRIC SURVEYS WERE CONDUCTED BY SJB GROUP, LLC. AND COASTAL ENGINEERING CONSULTANTS, INC. IN 2007. MAGNETOMETER SURVEYS WERE CONDUCTED BY ALPINE OCEAN SEISMIC SURVEY INC. IN 2003 AND 2004. INFORMATION SHOWN HEREON REFLECTS CONDITIONS AS THEY EXISTED ON THE SURVEY DATE AND CAN ONLY BE CONSIDERED INDICATIVE OF THE CONDITIONS AT THAT TIME. RESULTS OF THE MAGNETOMETER SURVEY ARE PRESENTED IN APPENDIX B OF THE SPECIFICATIONS.

3. AERIAL PHOTOGRAPHY OBTAINED FROM LOUISIANA ATLAS WEBSITE (http://atlas.lsu.edu). PHOTOGRAPHY FROM 2005 MAY NOT BE INDICATIVE OF CURRENT CONDITIONS.

4. THE CONTRACTOR SHALL BE RESPONSIBLE FOR NOTIFYING PIPELINE AND UTILITY OPERATORS WITHIN 7 DAYS AFTER THE NOTICE TO PROCEED. ALL PIPELINES AND UNDERGROUND UTILITIES SHALL BE MARKED WITH BUOYS AND OR STAKES BY THE CONTRACTOR AND VERIFIED BY AUTHORIZED PIPELINE PERSONNEL. THE CONTRACTOR SHALL MAINTAIN BUOYS AND OR STAKES DURING CONSTRUCTION. IT IS THE CONTRACTORS RESPONSIBILITY TO MAINTAIN THE CLEARANCES FROM THE PIPELINES SET FORTH IN THE PLAN DRAWINGS OR IN THE BID DOCUMENTS. SEE GP-28 "UTILITIES AND IMPROVEMENTS" FOR ADDITIONAL REQUIREMENTS SET FORTH BY PIPELINE COMPANIES. NO EXCAVATION IS ALLOWED WITHIN ANY AREA RESTRICTED BY PIPELINE COMPANIES AND SET FORTH ON THE PLANS. THE FOLLOWING IS A LIST OF OPERATORS KNOWN TO HAVE PIPELINES IN THE VICINITY. PIPELINE LOCATIONS SHOWN ON SHEETS 4 – 7 AND 23 – 24 ARE APPROXIMATIONS. THE OWNER IS NOT LIABLE FOR EXACT LOCATIONS. THE CONTRACTOR MUST CALL LOUISIANA ONE CALL AT 1-800-272-3020 WITHIN 7 DAYS AFTER THE NOTICE TO PROCEED.

2-20" AND 24" TGP GAS PIPELINE:

CONTACT: KURT CHERAMIE
TITLE: LAND MANAGER-R-O-W AGENT
EMAIL: KURT.CHERAMIE@ELPASO.COM
PHONE: 985-223-6417
ADDRESS: TENNESSEE GAS PIPELINE CO.
158 REGAL ROW
HOUMA, LA 70360

8" ENTERPRISE PRODUCTS/PROMIX LINE:

CONTACT: CLINT KIFFE
TITLE: REPRESENTATIVE
PHONE: 225-571-2517
EMAIL: CKIFFE@EPROD.COM
ADDRESS: ENTERPRISE PRODUCTS
2727 NORTH LOOP WEST
HOUSTON, TX 77008-1044
P. O. BOX 4324
HOUSTON, TX 77210-4324

12 AND 18" SNG GAS PIPELINES:

CONTACT: KURT CHERAMIE
TITLE: LAND MANAGER-R-O-W AGENT
EMAIL: KURT.CHERAMIE@ELPASO.COM
PHONE: 985-223-6417
ADDRESS: SOUTHERN NATURAL GAS
2400 BAYOU ROAD
ST. BERNARD, LA 70085

5. PLANS AND BID DOCUMENTS ARE COMPLIMENTARY, WHAT IS REQUIRED IN ONE IS AS BINDING AS IF REQUIRED BY ALL. CLARIFICATIONS AND INTERPRETATIONS OF, OR NOTIFICATIONS OF MINOR VARIATIONS AND DEVIATIONS IN THE CONTRACT DOCUMENTS, WILL BE ISSUED BY THE OWNER OR ENGINEER.

6. MEAN HIGH WATER (MHW) AND MEAN LOW WATER (MLW) ARE BASED ON TIDAL DATUM OBTAINED FROM THE NOAA OPERATED TIDE STATION, "GRAND ISLE – EAST POINT", STATION DESIGNATION 8761724. TIDAL EPOCH REFERENCED AT TIDE STATION WAS "5-YEAR SPECIAL UPDATE TO 1960-1978 TIDAL EPOCH". ELEVATIONS ARE REFERENCED TO NAVD88 (GEOID99), US FEET.

7. LANDOWNERS AFFECTED BY THE PROJECT ARE SHOWN ON SHEET 3. THE CONTRACTOR SHALL REFER TO SPECIAL PROVISION SP-4 "LANDOWNER REQUIREMENTS" IN THE SPECIFICATIONS FOR COORDINATION WITH THESE LANDOWNERS. CONTACT INFORMATION FOR THESE LANDOWNERS ARE LISTED BELOW:

PLAQUEMINES PARISH GOVERNMENT:

CONTACT: ALBERTINE KIMBLE
PHONE: 504-392-6690
ADDRESS: PLAQUEMINES PARISH GOVERNMENT
8056 HWY. 23, SUITE 308
BELLE CHASSE, LA 70037

PLAQUEMINES PARISH SCHOOL BOARD:

CONTACT: JAMES C. HOYLE, SUPERINTENDENT
PHONE: 504-392-4970
ADDRESS: PLAQUEMINES PARISH SCHOOL BOARD
P.O. BOX 69
BELLE CHASSE, LA 70037

BREARLEY:

CONTACT: WILLIAM CHRISTIAN, JR
PHONE: 713-975-1119
ADDRESS: 5937 STONES THROW ROAD
HOUSTON, TX 77057

SUMMARY OF ESTIMATED QUANTITIES

SCHEDULE OF BID ITEMS

ITEM No.	DESCRIPTION	UNIT	ESTIMATED QUANTITY
1	MOBILIZATION/DEMOBILIZATION	LUMP SUM	1
2	SURVEYING	LUMP SUM	1
3	ACCESS CHANNEL	LUMP SUM	1
4	MARSH FILL	CUBIC YARDS	1,123,400
5	CONTAINMENT DIKE	LINEAR FEET	27,300
6	BEACH AND DUNE FILL	CUBIC YARDS	1,744,800
7	WATER EXCHANGE CHANNEL	LINEAR FEET	4,160
8	SAND FENCING	LINEAR FEET	14,400
9	SETTLEMENT PLATES	EACH	6
10	WARNING SIGNS	EACH	12

ESTIMATED QUANTITIES SHOWN ARE FOR BIDDING PURPOSES ONLY AND WERE CALCULATED ACCORDING TO CONDITIONS SURVEYED IN APRIL, 2007 . SETTLEMENT OF THE DREDGE MATERIAL IS NOT INCLUDED IN THE BID QUANTITIES. ACTUAL QUANTITIES WILL BE BASED ON A SURVEY DONE AS PART OF THIS CONTRACT AS REQUIRED IN TS-6 'SURVEYING' OF THE SPECIFICATIONS. THE OWNER RESERVES THE RIGHT TO ADJUST QUANTITIES HIGHER OR LOWER WITHOUT ADJUSTMENT OF THE UNIT PRICE.

REV.	DATE	BY	DESCRIPTION

DATE: OCT. 2007 | SHEET: 2 OF 29
DESIGNED: T.M.A. | DRAWN: R.P.G./J.S.D.
CHECKED: M.T.P. | SCALE: AS NOTED
STATE PROJECT NUMBER: BA-35
FEDERAL PROJECT NUMBER: BA-35
APPROVED BY: R.J.J.

LOUISIANA DEPARTMENT OF NATURAL RESOURCES
PASS CHALAND TO GRAND BAYOU PASS
BARRIER SHORELINE RESTORATION (BA-35)
GENERAL NOTES

STB GROUP LLC.
P.O. BOX 1721
BATON ROUGE, LA. 70821
PHONE (225) 769-3400
FAX (225) 769-3505

COASTAL ENGINEERING CONSULTANTS INC.
PH: (239) 643-2324
FAX: (239) 643-1143
3106 SOUTH HORSESHOE DRIVE
NAPLES, FLORIDA 34104

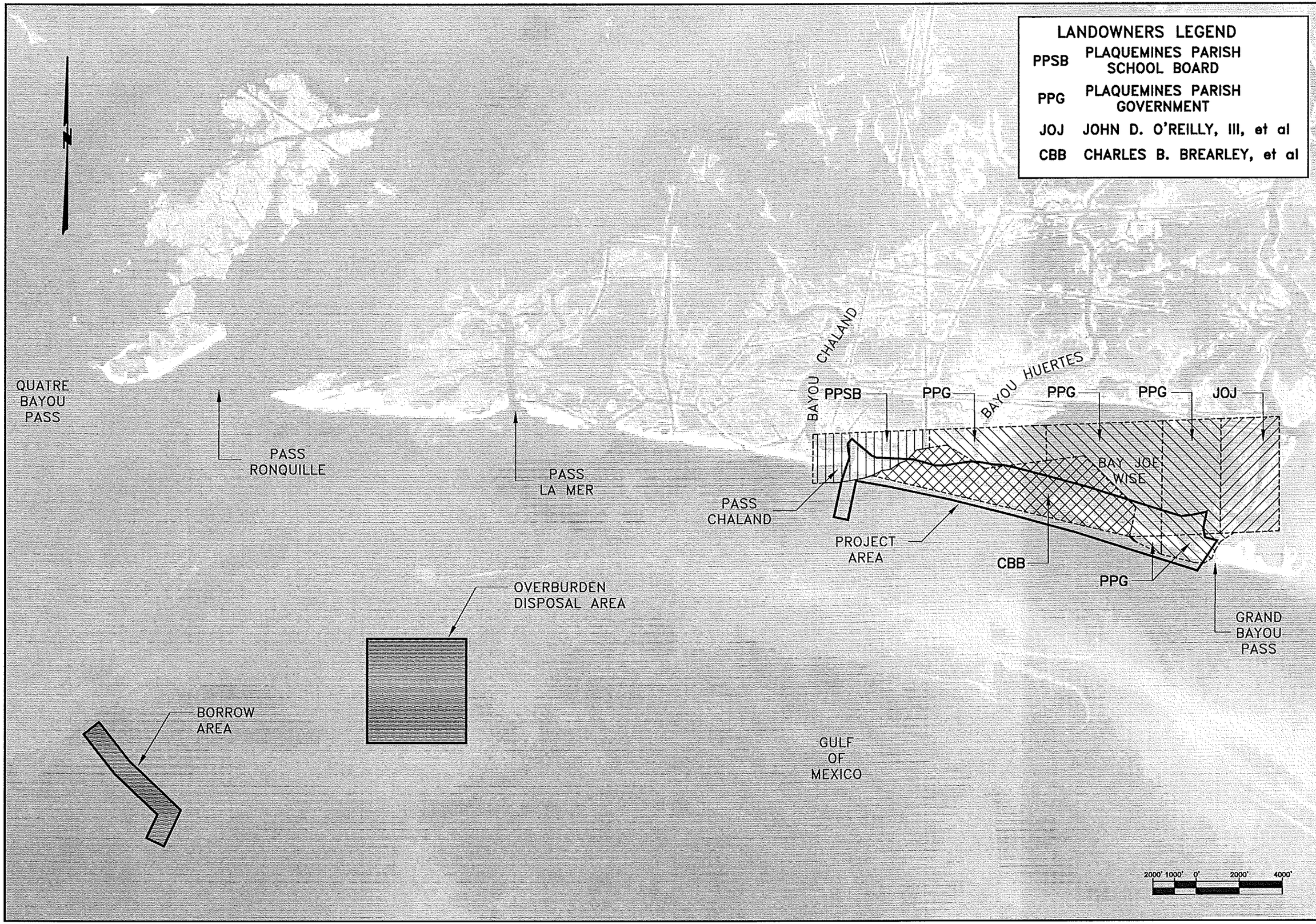

SHEET: 3

REV.	DATE	BY	DESCRIPTION

DATE: OCT. 2007
SHEET: 3 OF 29
DESIGNED: T.M.A.
DRAWN: R.P.G./J.S.D.
CHECKED: M.T.P.
SCALE: AS NOTED
STATE PROJECT NUMBER: BA-35
FEDERAL PROJECT NUMBER: BA-35
APPROVED BY: R.J.J.

LOUISIANA DEPARTMENT OF NATURAL RESOURCES

PASS CHALAND TO GRAND BAYOU PASS BARRIER SHORELINE RESTORATION (BA-35)

PROJECT LOCATION MAP & LANDOWNER IDENTIFICATION

SJB GROUP LLC.
P.O. BOX 1751 BATON ROUGE, LA. 70821
PHONE (225) 769-3400 FAX (225) 769-3598

COASTAL ENGINEERING CONSULTANTS
PH: (239) 643-2324
FAX: (239) 643-1143
3106 SOUTH HORSESHOE DRIVE
NAPLES, FLORIDA 34104

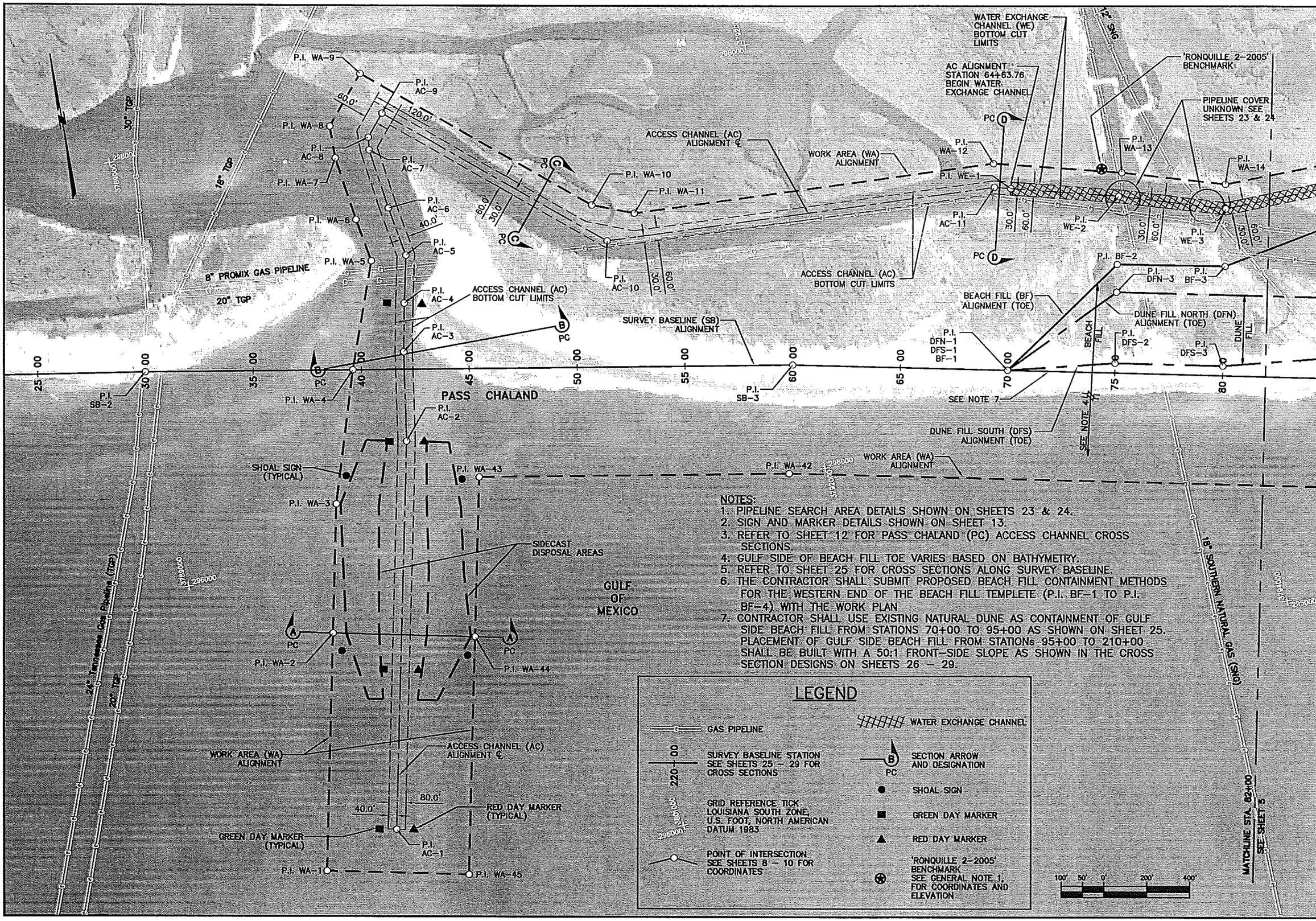

NOTES:
1. PIPELINE SEARCH AREA DETAILS SHOWN ON SHEETS 23 & 24.
2. SIGN AND MARKER DETAILS SHOWN ON SHEET 13.
3. REFER TO SHEET 12 FOR PASS CHALAND (PC) ACCESS CHANNEL CROSS SECTIONS.
4. GULF SIDE OF BEACH FILL TOE VARIES BASED ON BATHYMETRY.
5. REFER TO SHEET 25 FOR CROSS SECTIONS ALONG SURVEY BASELINE.
6. THE CONTRACTOR SHALL SUBMIT PROPOSED BEACH FILL CONTAINMENT METHODS FOR THE WESTERN END OF THE BEACH FILL TEMPLETE (P.I. BF-1 TO P.I. BF-4) WITH THE WORK PLAN
7. CONTRACTOR SHALL USE EXISTING NATURAL DUNE AS CONTAINMENT OF GULF SIDE BEACH FILL FROM STATIONS 70+00 TO 95+00 AS SHOWN ON SHEET 25. PLACEMENT OF GULF SIDE BEACH FILL FROM STATIONs 95+00 TO 210+00 SHALL BE BUILT WITH A 50:1 FRONT-SIDE SLOPE AS SHOWN IN THE CROSS SECTION DESIGNS ON SHEETS 26 – 29.

SHEET: 4

REV.	DATE	BY	DESCRIPTION

DATE: OCT. 2007
SHEET: 4 OF 29
DESIGNED: T.M.A.
DRAWN: R.P.G./J.S.D.
CHECKED: M.T.P.
SCALE: AS NOTED
STATE PROJECT NUMBER: BA-35
FEDERAL PROJECT NUMBER: BA-35
APPROVED BY: R.J.J.

LOUISIANA DEPARTMENT OF NATURAL RESOURCES
PASS CHALAND TO GRAND BAYOU PASS BARRIER SHORELINE RESTORATION (BA-35)

FILL AREA LAYOUT

STB GROUP LLC.
P.O. BOX 1721 BATON ROUGE, LA. 70821
PHONE (225) 769-3400 FAX: (225) 769-3598

COASTAL ENGINEERING CONSULTANTS
PH: (239) 643-2324
FAX: (239) 643-1143
3106 SOUTH HORSESHOE DRIVE NAPLES, FLORIDA 34104

NOTES:
1. PIPELINE SEARCH AREA DETAILS SHOWN ON SHEETS 23 & 24.
2. REFER TO SHEET 11 FOR TYPICAL SECTION.
3. REFER TO SHEET 11 FOR POST-CONSTRUCTION CHANNEL PLUG TYPICAL SECTION.
4. GULF SIDE OF BEACH FILL TOE VARIES BASED ON BATHYMETRY.
5. REFER TO SHEETS 25-27 FOR CROSS SECTIONS ALONG SURVEY BASELINE.
6. THE CONTRACTOR SHALL SUBMIT PROPOSED BEACH FILL CONTAINMENT METHODS FOR THE WESTERN END OF THE BEACH FILL TEMPLETE (P.I. BF-1 TO P.I. BF-4) WITH THE WORK PLAN.
7. CONTRACTOR SHALL USE EXISTING NATURAL DUNE AS CONTAINMENT OF GULF SIDE BEACH FILL FROM STATIONS 70+00 TO 95+00. PLACEMENT OF GULF SIDE BEACH FILL FROM STATIONS 95+00 TO 210+00 SHALL BE BUILT WITH A 50:1 FRONT-SIDE SLOPE AS SHOWN IN THE CROSS SECTION DESIGNS ON SHEETS 26 - 25.

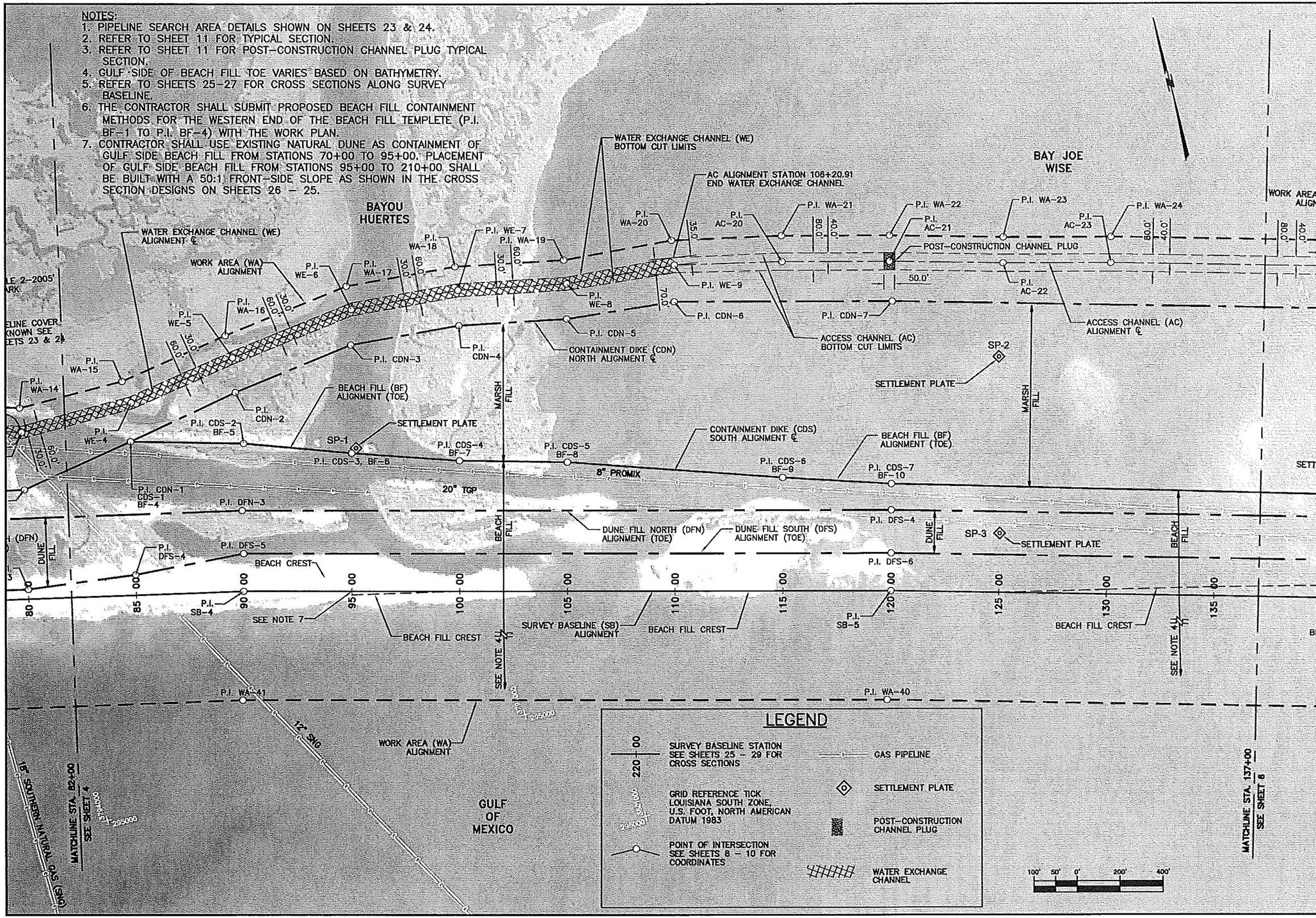

SHEET: 5

REV.	DATE	BY	DESCRIPTION

DATE: OCT. 2007
SHEET: 5 OF 29
DESIGNED: T.M.A.
DRAWN: R.P.C./J.S.D.
CHECKED: M.T.P.
SCALE: AS NOTED
STATE PROJECT NUMBER: BA-35
FEDERAL PROJECT NUMBER: BA-35
APPROVED BY: R.J.J.

LOUISIANA DEPARTMENT OF NATURAL RESOURCES
PASS CHALAND TO GRAND BAYOU PASS BARRIER SHORELINE RESTORATION (BA-35)
FILL AREA LAYOUT

SJB GROUP LLC.
P.O. BOX 1751 BATON ROUGE, LA. 70821
PHONE (225) 769-3400 FAX (225) 769-3380

COASTAL ENGINEERING CONSULTANTS
PH: (239) 643-2324
FAX: (239) 643-1143
3106 SOUTH HORSESHOE DRIVE
NAPLES, FLORIDA 34104

NOTES:
1. PIPELINE SEARCH AREA DETAILS SHOWN ON SHEETS 23 & 24.
2. REFER TO SHEET 11 FOR TYPICAL SECTION.
3. REFER TO SHEET 11 FOR POST-CONSTRUCTION CHANNEL PLUG TYPICAL SECTION.
4. GULF SIDE OF BEACH FILL TOE VARIES BASED ON BATHYMETRY.
5. REFER TO SHEETS 27 – 29 FOR CROSS SECTIONS ALONG SURVEY BASELINE.

BAY JOE WISE

WORK AREA (WA) ALIGNMENT
P.I. WA-25
P.I. AC-24
P.I. WA-26
P.I. AC-25
P.I. WA-27
P.I. AC-26
P.I. WA-28
P.I. AC-27
P.I. WA-29
P.I. AC-28
P.I. WA-30
P.I. AC-29
P.I. WA-31
P.I. AC-30
80.0'
40.0'
50.0'
POST-CONSTRUCTION CHANNEL PLUG
P.I. CDN-8
CONTAINMENT DIKE (CDN) NORTH ALIGNMENT ℄
ACCESS CHANNEL (AC) ALIGNMENT ℄
ACCESS CHANNEL (AC) BOTTOM CUT LIMITS
P.I. CDN-9
SETTLEMENT PLATE
SP-5
SP-6
MARSH FILL
BEACH FILL (BF) ALIGNMENT (TOE)
CONTAINMENT DIKE (CDS) SOUTH ALIGNMENT ℄
P.I. CDS-8 BF-11
P.I. CDS-9 BF-12
P.I. DFN-5
P.I. DFN-6
P.I. DFS-7
P.I. DFS-8
SP-4
BEACH FILL
DUNE FILL
8" PROMIX
20" TCP
DUNE FILL NORTH (DFN) ALIGNMENT (TOE)
DUNE FILL SOUTH (DFS) ALIGNMENT (TOE)
135+00
140+00
145+00
150+00
155+00
160+00
165+00
170+00
175+00
180+00
185+00
190+00
P.I. SB-6
P.I. SB-7
BEACH FILL CREST
SURVEY BASELINE (SB) ALIGNMENT
SEE NOTE 4
P.I. WA-39
WORK AREA (WA) ALIGNMENT
GULF OF MEXICO
MATCHLINE STA. 137+00 SEE SHEET 5
MATCHLINE STA. 192+00 SEE SHEET 7
100' 50' 0' 200' 400'

LEGEND

- SURVEY BASELINE STATION SEE SHEETS 25 – 29 FOR CROSS SECTIONS (220+00)
- GRID REFERENCE TICK LOUISIANA SOUTH ZONE, U.S. FOOT, NORTH AMERICAN DATUM 1983
- POINT OF INTERSECTION SEE SHEETS 8 – 10 FOR COORDINATES
- GAS PIPELINE
- SETTLEMENT PLATE
- POST-CONSTRUCTION CHANNEL PLUG

SHEET: 6

REV.	DATE	BY	DESCRIPTION

SHEET: 6 OF 29
DATE: OCT. 2007
DRAWN: R.P.C./L.S.D.
DESIGNED: T.M.A.
SCALE: AS NOTED
CHECKED: M.T.P.
STATE PROJECT NUMBER: BA-35
FEDERAL PROJECT NUMBER: BA-35
APPROVED BY: R.J.J.

LOUISIANA DEPARTMENT OF NATURAL RESOURCES
PASS CHALAND TO GRAND BAYOU PASS BARRIER SHORELINE RESTORATION (BA-35)
FILL AREA LAYOUT

SJB GROUP L.L.C.
PHONE (225) 769-3400
FAX (225) 769-3998
P.O. BOX 1751
BATON ROUGE, LA. 70821

COASTAL ENGINEERING CONSULTANTS
PH: (239) 643-2324
FAX: (239) 643-1143
3106 SOUTH HORSESHOE DRIVE
NAPLES, FLORIDA 34104

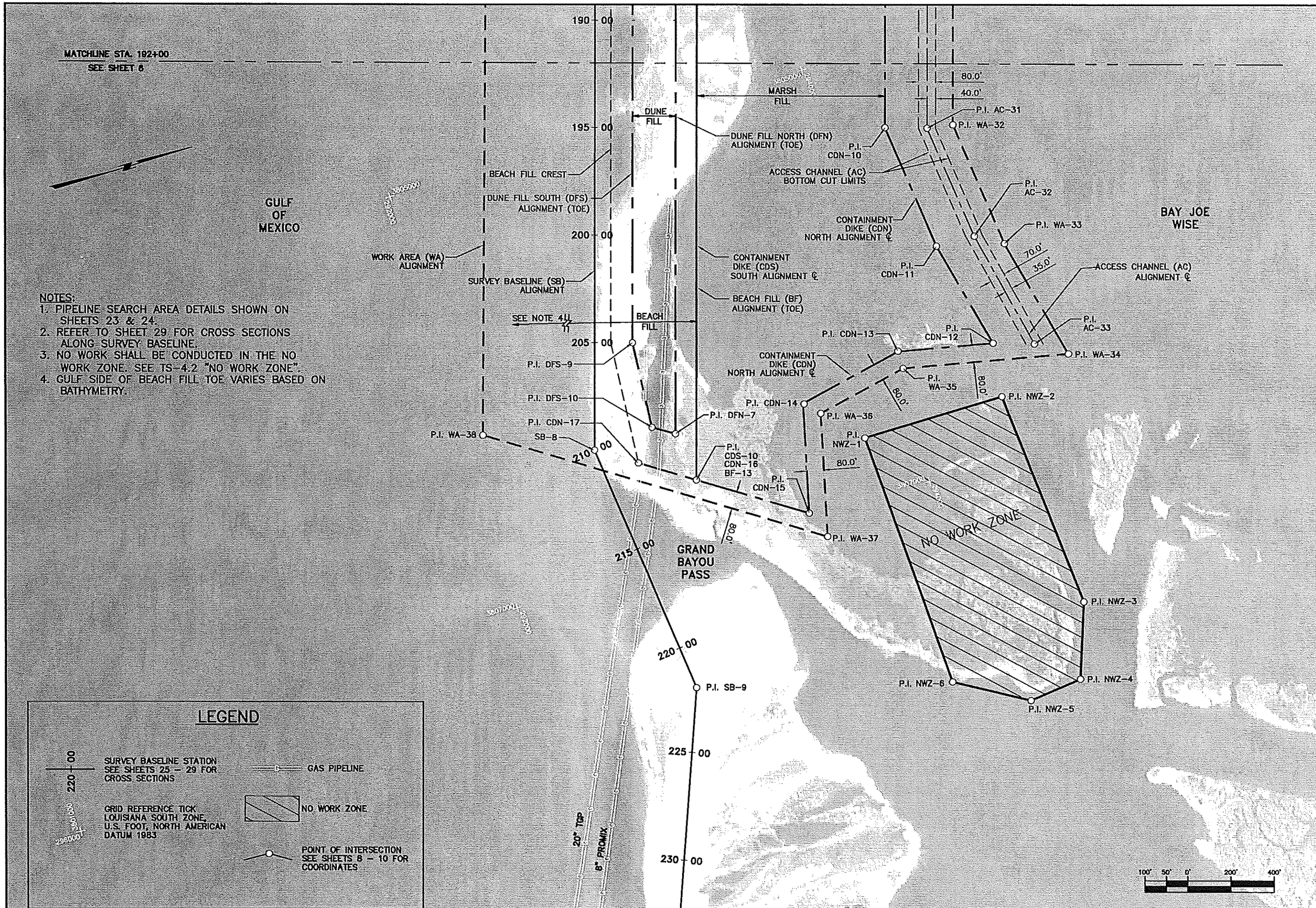

NOTES:
1. PIPELINE SEARCH AREA DETAILS SHOWN ON SHEETS 23 & 24.
2. REFER TO SHEET 29 FOR CROSS SECTIONS ALONG SURVEY BASELINE.
3. NO WORK SHALL BE CONDUCTED IN THE NO WORK ZONE. SEE TS-4.2 "NO WORK ZONE".
4. GULF SIDE OF BEACH FILL TOE VARIES BASED ON BATHYMETRY.

LEGEND

- SURVEY BASELINE STATION SEE SHEETS 25 – 29 FOR CROSS SECTIONS
- GAS PIPELINE
- GRID REFERENCE TICK LOUISIANA SOUTH ZONE, U.S. FOOT, NORTH AMERICAN DATUM 1983
- NO WORK ZONE
- POINT OF INTERSECTION SEE SHEETS 8 – 10 FOR COORDINATES

SHEET: 7

REV.	DATE	BY	DESCRIPTION

DATE: OCT. 2007 | SHEET: 7 OF 29
DESIGNED: T.M.A. | DRAWN: R.P.G./J.S.D
CHECKED: M.T.P. | SCALE: AS NOTED
STATE PROJECT NUMBER: BA-35
FEDERAL PROJECT NUMBER: BA-35
APPROVED BY: R.J.J.

LOUISIANA DEPARTMENT OF NATURAL RESOURCES

PASS CHALAND TO GRAND BAYOU PASS BARRIER SHORELINE RESTORATION (BA-35)

FILL AREA LAYOUT

SJB GROUP LLC.
P.O. BOX 1751 BATON ROUGE, LA. 70821
PHONE (225) 769-3400 FAX (225) 769-3399

COASTAL ENGINEERING CONSULTANTS
PH: (239) 643-2324
FAX: (239) 643-1143
3106 SOUTH HORSESHOE DRIVE
NAPLES, FLORIDA 34104

SURVEY BASELINE ALIGNMENT

PI NUMBER	STATION	LATITUDE	LONGITUDE	NORTHING	EASTING	BEARING TO NEXT PI	DEFLECTION	DEFLECTION TO LEFT OR RIGHT	DISTANCE TO NEXT PI
SB-1	0+00.00	29°18'30.3198"	89°44'53.7209"	297,493.45	3,786,023.67	S 80°50'00.0" E			3,000.00
SB-2	30+00.00	29°18'25.1822"	89°44'20.3471"	297,015.53	3,788,985.36	S 80°05'00.0" E	00°45'00.0"	RIGHT	3,000.00
SB-3	60+00.00	29°18'19.6599"	89°43'47.0540"	296,498.88	3,791,940.53	S 77°58'00.0" E	02°07'00.0"	RIGHT	3,000.00
SB-4	90+00.00	29°18'13.0612"	89°43'14.0174"	295,873.44	3,794,874.61	S 75°52'00.0" E	02°06'00.0"	RIGHT	3,000.00
SB-5	120+00.00	29°18'05.4036"	89°42'41.2802"	295,140.90	3,797,783.80	S 74°49'30.0" E	01°02'30.0"	RIGHT	3,000.00
SB-6	150+00.00	29°17'57.2234"	89°42'08.7086"	294,355.60	3,800,679.20	S 72°27'00.0" E	02°22'30.0"	RIGHT	3,000.00
SB-7	180+00.00	29°17'47.8648"	89°41'36.5535"	293,450.98	3,803,539.56	S 72°42'30.0" E	00°15'30.0"	LEFT	3,000.00
SB-8	210+00.00	29°17'38.6313"	89°41'04.3522"	292,559.28	3,806,403.97	N 83°56'00.0" E	23°21'30.0"	LEFT	1,200.00
SB-9	222+00.00	29°17'39.7165"	89°40'50.8568"	292,686.10	3,807,597.25	S 68°46'30.0" E	27°17'30.0"	RIGHT	3,000.00
SB-10	252+00.00	29°17'28.5653"	89°40'19.4561"	291,600.00	3,810,393.75				

ACCESS AND WATER EXCHANGE CHANNEL ALIGNMENTS

PI NUMBER	STATION	LATITUDE	LONGITUDE	NORTHING	EASTING	BEARING TO NEXT PI	DEFLECTION	DEFLECTION TO LEFT OR RIGHT	DISTANCE TO NEXT PI
AC-1	0+00.00	29°18'02.3388"	89°44'12.1747"	294,718.32	3,789,740.99	N 12°02'00.0" E			1,800.00
AC-2	18+00.00	29°18'19.7131"	89°44'07.6597"	296,478.77	3,790,116.25	N 08°49'31.2" E	03°12'28.8"	LEFT	415.55
AC-3	22+15.55	29°18'23.7690"	89°44'06.8749"	296,889.40	3,790,180.01	N 11°18'35.8" E	02°29'04.5"	RIGHT	226.00
AC-4	24+41.55	29°18'25.9565"	89°44'06.3395"	297,111.01	3,790,224.33	N 12°31'43.7" E	01°13'08.0"	RIGHT	223.02
AC-5	26+64.57	29°18'28.1049"	89°44'05.7588"	297,328.72	3,790,272.71	N 09°47'37.7" W	22°19'21.4"	LEFT	232.93
AC-6	28+97.50	29°18'30.3824"	89°44'06.1701"	297,558.25	3,790,233.09	N 07°55'01.9" W	01°52'35.8"	RIGHT	283.71
AC-7	31+81.22	29°18'33.1694"	89°44'06.5672"	297,839.26	3,790,194.01	N 06°39'45.4" E	14°34'47.3"	RIGHT	59.24
AC-8	32+40.45	29°18'33.7509"	89°44'06.4803"	297,898.10	3,790,200.88	N 40°09'51.9" E	33°30'06.4"	RIGHT	128.99
AC-9	33+69.44	29°18'34.7151"	89°44'05.5251"	297,996.67	3,790,284.08	S 49°50'08.1" E	90°00'00.0"	RIGHT	1,198.77
AC-10	45+68.21	29°18'26.9350"	89°43'55.3009"	297,223.49	3,791,200.17	S 87°13'30.4" E	37°23'22.3"	LEFT	1,818.25
AC-11	63+86.45	29°18'25.8120"	89°43'34.8042"	297,135.46	3,793,016.28	S 75°18'50.4" E	11°54'40.0"	RIGHT	503.21
WE-1	64+63.76	29°18'25.6076"	89°43'33.9627"	297,115.86	3,793,091.07	S 75°18'50.4" E	00°0'00.0"	LEFT	77.31
WE-2	69+66.97	29°18'24.2772"	89°43'28.4854"	296,988.29	3,793,577.84	S 72°47'42.4" E	02°31'08.1"	RIGHT	499.87
WE-3	74+66.84	29°18'22.7472"	89°43'23.1161"	296,840.43	3,794,055.35	N 88°57'01.0" E	18°15'16.6"	LEFT	526.55
WE-4	79+93.39	29°18'22.7694"	89°43'17.1689"	296,850.08	3,794,581.81	N 80°14'40.9" E	08°42'20.1"	LEFT	516.55
WE-5	85+09.94	29°18'23.5648"	89°43'11.4058"	296,937.60	3,795,090.88	N 81°51'57.3" E	01°37'16.4"	RIGHT	594.38
WE-6	91+04.32	29°18'24.3153"	89°43'04.7471"	297,021.70	3,795,679.29	S 86°04'14.3" E	12°03'48.4"	RIGHT	502.79
WE-7	96+07.11	29°18'23.9042"	89°42'59.0877"	296,987.25	3,796,180.89	S 79°18'01.1" E	06°46'13.2"	RIGHT	505.02
WE-8	101+12.13	29°18'22.9067"	89°42'53.4983"	296,893.48	3,796,677.13	S 85°33'52.7" E	06°15'51.6"	LEFT	508.78
WE-9	106+20.91	29°18'22.4463"	89°42'47.7758"	296,854.14	3,797,184.39	S 77°35'06.2" E	07°58'46.5"	RIGHT	499.82
AC-20	111+20.74	29°18'21.3142"	89°42'42.2801"	296,746.68	3,797,672.53	S 75°52'00.0" E	01°43'06.2"	RIGHT	500.01
AC-21	116+20.74	29°18'20.0378"	89°42'36.8238"	296,624.59	3,798,157.40	S 74°51'02.7" E	01°00'57.3"	RIGHT	527.02
AC-22	121+47.76	29°18'18.6030"	89°42'31.1008"	296,486.86	3,798,666.10	S 75°58'14.7" E	01°07'12.0"	LEFT	500.90
AC-23	126+48.66	29°18'17.3328"	89°42'25.6321"	296,365.43	3,799,152.06	S 74°49'29.8" E	01°08'44.9"	RIGHT	1,500.00
AC-24	141+48.66	29°18'13.2425"	89°42'09.3459"	295,972.78	3,800,599.75	S 74°41'26.6" E	00°08'03.2"	RIGHT	562.26
AC-25	147+10.92	29°18'11.6966"	89°42'03.2454"	295,824.33	3,801,142.06	S 72°27'25.7" E	02°14'00.9"	RIGHT	501.56
AC-26	152+12.48	29°18'10.1326"	89°41'57.8689"	295,673.15	3,801,620.29	S 72°26'59.4" E	00°00'26.4"	RIGHT	500.00
AC-27	157+12.48	29°18'08.5729"	89°41'52.5095"	295,522.38	3,802,097.02	S 72°26'07.2" E	00°00'52.1"	RIGHT	500.00
AC-28	162+12.48	29°18'07.0119"	89°41'47.1505"	295,371.49	3,802,573.71	S 72°27'52.8" E	00°01'45.5"	LEFT	499.99
AC-29	167+12.47	29°18'05.4532"	89°41'41.7908"	295,220.84	3,803,050.46	S 72°27'00.3" E	00°00'52.5"	RIGHT	1,000.01
AC-30	177+12.48	29°18'02.3333"	89°41'31.0721"	294,919.30	3,804,003.93	S 72°42'32.0" E	00°15'31.7"	LEFT	1,493.06
AC-31	192+05.53	29°17'57.7382"	89°41'15.0451"	294,475.53	3,805,429.51	N 83°32'31.8" E	23°44'56.2"	LEFT	546.26
AC-32	197+51.79	29°17'58.2691"	89°41'08.9055"	294,536.97	3,805,972.30	N 78°02'34.2" E	05°29'57.6"	LEFT	573.02
AC-33	203+24.82	29°17'59.3645"	89°41'02.5556"	294,655.69	3,806,532.89				

WORK AREA ALIGNMENT

PI NUMBER	STATION	LATITUDE	LONGITUDE	NORTHING	EASTING	BEARING TO NEXT PI	DEFLECTION	DEFLECTION TO LEFT OR RIGHT	DISTANCE TO NEXT PI
WA-1	0+00.00	29°18'01.1089"	89°44'16.1856"	294,589.15	3,789,387.62	N 12°02'00.0" E			1,100.00
WA-2	11+00.00	29°18'11.7265"	89°44'13.4267"	295,664.98	3,789,616.94	N 12°02'00.0" E	00°00'00.0"	RIGHT	600.00
WA-3	17+00.00	29°18'17.5180"	89°44'11.9217"	296,251.80	3,789,742.03	N 17°35'15.1" E	05°33'15.1"	RIGHT	627.63
WA-4	23+27.63	29°18'23.4141"	89°44'09.6857"	296,850.09	3,789,931.68	N 20°14'53.7" E	02°39'38.6"	RIGHT	514.31
WA-5	28+41.93	29°18'28.1659"	89°44'07.5995"	297,332.61	3,790,109.67	N 09°47'37.7" W	30°02'31.3"	LEFT	203.98
WA-6	30+45.92	29°18'30.1604"	89°44'07.9596"	297,533.62	3,790,074.98	N 07°55'01.9" W	01°52'35.8"	RIGHT	300.58
WA-7	33+46.50	29°18'33.1132"	89°44'08.3804"	297,831.34	3,790,033.57	N 00°47'10.1" E	08°42'12.0"	RIGHT	150.06
WA-8	34+96.56	29°18'34.5981"	89°44'08.3335"	297,981.38	3,790,035.63	N 40°09'51.9" E	39°22'41.7"	RIGHT	281.93
WA-9	37+78.49	29°18'36.7056"	89°44'06.2459"	298,196.83	3,790,217.47	S 49°50'08.1" E	90°00'00.0"	RIGHT	1,235.60
WA-10	50+14.08	29°18'28.6865"	89°43'55.7074"	297,399.89	3,791,161.71	S 68°31'49.3" E	18°41'41.1"	LEFT	200.71
WA-11	52+14.80	29°18'27.9335"	89°43'53.6094"	297,326.43	3,791,348.50	S 87°13'30.4" E	18°41'41.1"	LEFT	1,686.55
WA-12	69+01.35	29°18'26.8918"	89°43'34.5972"	297,244.78	3,793,033.07	S 75°18'50.4" E	11°54'40.0"	RIGHT	598.41
WA-13	74+99.76	29°18'25.3096"	89°43'28.0837"	297,093.07	3,793,611.94	S 73°02'30.2" E	02°16'20.2"	RIGHT	483.46
WA-14	79+83.23	29°18'23.8495"	89°43'22.8835"	296,952.05	3,794,074.38	N 89°26'34.8" E	17°30'55.0"	LEFT	490.96
WA-15	84+74.19	29°18'23.8284"	89°43'17.3383"	296,956.83	3,794,565.31	N 80°14'40.9" E	09°11'53.9"	LEFT	525.08
WA-16	89+99.26	29°18'24.6370"	89°43'11.4798"	297,045.80	3,795,082.80	N 81°51'57.3" E	01°37'16.4"	RIGHT	606.89
WA-17	96+06.15	29°18'25.4031"	89°43'04.6811"	297,131.66	3,795,683.58	S 86°04'14.3" E	12°03'48.4"	RIGHT	512.54
WA-18	101+18.70	29°18'24.9841"	89°42'58.9118"	297,096.54	3,796,194.92	S 79°18'01.1" E	06°46'13.2"	RIGHT	505.11
WA-19	106+23.81	29°18'23.9864"	89°42'53.3214"	297,002.76	3,796,691.25	S 86°07'46.2" E	06°49'45.1"	LEFT	510.06
WA-20	111+33.87	29°18'23.5744"	89°42'47.5796"	296,968.33	3,797,200.15	S 78°09'13.9" E	07°58'32.3"	RIGHT	511.21
WA-21	116+45.08	29°18'22.4656"	89°42'41.9459"	296,863.39	3,797,700.47	S 75°52'00.0" E	02°17'13.9"	RIGHT	502.47
WA-22	121+47.55	29°18'21.1828"	89°42'36.4627"	296,740.70	3,798,187.73	S 74°51'02.7" E	01°00'57.3"	RIGHT	526.91
WA-23	126+74.46	29°18'19.7484"	89°42'30.7408"	296,603.00	3,798,696.33	S 75°58'14.7" E	01°07'12.0"	LEFT	500.93
WA-24	131+75.38	29°18'18.4781"	89°42'25.2719"	296,481.56	3,799,182.31	S 74°49'29.8" E	01°08'44.9"	RIGHT	1,501.29
WA-25	146+76.68	29°18'14.3842"	89°42'08.9715"	296,088.57	3,800,631.26	S 74°41'26.7" E	00°08'03.1"	RIGHT	564.78
WA-26	152+41.46	29°18'12.8313"	89°42'02.8435"	295,939.45	3,801,176.00	S 72°27'25.7" E	02°14'00.9"	RIGHT	503.90
WA-27	157+45.36	29°18'11.2601"	89°41'57.4420"	295,787.57	3,801,656.46	S 72°26'59.4" E	00°00'26.4"	RIGHT	500.02
WA-28	162+45.37	29°18'09.7003"	89°41'52.0824"	295,636.79	3,802,133.20	S 72°26'07.2" E	00°00'52.1"	RIGHT	500.03
WA-29	167+45.41	29°18'08.1392"	89°41'46.7231"	295,485.89	3,802,609.92	S 72°27'52.8" E	00°01'45.5"	LEFT	499.93
WA-30	172+45.33	29°18'06.5808"	89°41'41.3640"	295,335.27	3,803,086.62	S 72°27'00.3" E	00°00'52.5"	RIGHT	999.77
WA-31	182+45.10	29°18'03.4616"	89°41'30.6479"	295,033.80	3,804,039.85	S 72°42'32.0" E	00°15'31.8"	LEFT	1,476.25
WA-32	197+21.35	29°17'58.9181"	89°41'14.8013"	294,595.02	3,805,449.38	N 83°44'43.4" E	23°32'44.6"	LEFT	600.93
WA-33	203+22.28	29°17'59.4779"	89°41'08.0446"	294,660.16	3,806,046.77	N 77°02'29.2" E	06°42'14.25"	LEFT	591.77
WA-34	209+14.05	29°18'00.7094"	89°41'01.5105"	294,792.86	3,806,623.46	S 12°04'56.1" W	115°02'27.0"	RIGHT	771.26
WA-35	216+85.31	29°17'53.2671"	89°41'03.4562"	294,038.68	3,806,462.03	S 11°33'51.4" E	23°38'47.5"	LEFT	435.08
WA-36	221+20.39	29°17'49.0354"	89°41'02.5405"	293,612.44	3,806,549.25	S 75°59'18.7" E	00°29'47.2"	LEFT	573.03
WA-37	226+93.42	29°17'47.5828"	89°40'56.2846"	293,473.70	3,807,105.23	S 34°29'47.9" E	109°29'30.7"	RIGHT	1666.81
WA-38	243+60.23	29°17'33.9561"	89°41'06.9001"	292,083.82	3,806,185.18	N 72°27'0.00" W	74°02'47.9"	RIGHT	5937.56
WA-39	302+97.79	29°17'52.4803"	89°42'10.5388"	293,874.22	3,800,523.98	N 74°49'30.0" W	02°22'30.0"	LEFT	2985.09
WA-40	332+82.88	29°18'00.6198"	89°42'42.9480"	294,655.62	3,797,642.98	N 75°52'00.0" W	01°02'30.0"	LEFT	2986.29
WA-41	362+69.17	29°18'08.2423"	89°43'15.5352"	295,384.81	3,794,747.08	N 77°58'00.0" W	02°06'00.0"	LEFT	2981.60
WA-42	392+50.77	29°18'14.8004"	89°43'48.3688"	296,006.42	3,791,831.00	N 80°05'00.0" W	02°07'0.00"	LEFT	1435.80
WA-43	406+86.57	29°18'17.4436"	89°44'04.3026"	296,253.69	3,790,416.65	S 12°01'40.9" W	87°53'19.1"	LEFT	742.54
WA-44	414+29.11	29°17'50.4513"	89°40'43.5157"	295,527.48	3,790,261.94	S 12°02'12.9" W	00°00'32.0"	RIGHT	1099.96
WA-45	425+29.07	29°17'59.6591"	89°44'08.9244"	294,451.68	3,790,032.53				

SHEET: 8

REV.	DATE	BY	DESCRIPTION

DATE: OCT. 2007 | SHEET: 8 OF 29
DESIGNED: T.M.A. | DRAWN: R.P.G./J.S.D.
CHECKED: M.T.P. | SCALE: AS NOTED
STATE PROJECT NUMBER: BA-35
FEDERAL PROJECT NUMBER: BA-33
APPROVED BY: R.J.J.

LOUISIANA DEPARTMENT OF NATURAL RESOURCES
PASS CHALAND TO GRAND BAYOU PASS
BARRIER SHORELINE RESTORATION (BA-35)
SURVEY BASELINE, ACCESS AND WATER EXCHANGE CHANNEL, AND WORK AREA ALIGNMENT TABLES

STB GROUP LLC.
P.O. BOX 1751
BATON ROUGE, LA. 70821
PHONE (225) 769-3400
FAX (225) 769-3586

COASTAL ENGINEERING CONSULTANTS
PH: (239) 643-2324
FAX: (239) 643-1143
3106 SOUTH HORSESHOE DRIVE
NAPLES, FLORIDA 34104

BEACH FILL ALIGNMENT

PI NUMBER	STATION	LATITUDE	LONGITUDE	NORTHING	EASTING	BEARING TO NEXT PI	DEFLECTION	DEFLECTION TO LEFT OR RIGHT	DISTANCE TO NEXT PI
BF-1	0+00.00	29°18'17.4606"	89°43'36.0416"	296,290.40	3,792,918.56	N 56°48'18.2" E			709.94
BF-2	7+09.94	29°18'21.2256"	89°43'29.2707"	296,679.09	3,793,512.65	S 78°25'30.1" E	44°46'11.7"	RIGHT	500.02
BF-3	12+09.96	29°18'20.1644"	89°43'23.7545"	296,578.76	3,794,002.50	N 79°38'30.0" E	21°55'59.9"	LEFT	540.77
BF-4	17+50.73	29°18'21.0528"	89°43'17.7313"	296,675.99	3,794,534.46	S 74°58'24.2" E	25°23'05.8"	RIGHT	525.89
BF-5	22+76.62	29°18'19.6323"	89°43'12.0170"	296,539.64	3,795,042.36	S 70°43'26.0" E	04°14'58.2"	RIGHT	502.02
BF-6	27+78.64	29°18'17.9259"	89°43'06.6916"	296,373.92	3,795,516.24	S 71°51'45.0" E	01°08'18.9"	LEFT	501.22
BF-7	32+79.87	29°18'16.3149"	89°43'01.3372"	296,217.89	3,795,992.56	S 75°03'52.5" E	03°12'07.5"	LEFT	500.05
BF-8	37+79.92	29°18'14.9717"	89°42'55.9012"	296,089.01	3,796,475.72	S 71°41'29.3" E	03°22'23.1"	RIGHT	1,002.66
BF-9	47+82.58	29°18'11.7207"	89°42'45.2014"	295,774.04	3,797,427.62	S 72°27'48.9" E	00°46'19.6"	LEFT	505.41
BF-10	52+87.99	29°18'10.1458"	89°42'39.7833"	295,621.75	3,797,909.54	S 74°20'59.4" E	01°53'10.4"	LEFT	3,014.41
BF-11	83+02.39	29°18'01.6885"	89°42'07.1340"	294,808.58	3,800,812.19	S 72°27'00.0" E	01°53'59.4"	RIGHT	3,008.72
BF-12	113+11.11	29°17'52.3026"	89°41'34.8849"	293,901.33	3,803,680.87	S 72°42'30.0" E	00°15'30.0"	LEFT	3136.17
BF-13	144+47.28	29°17'42.6498"	89°41'01.2217"	292,969.15	3,806,675.30				

DUNE FILL NORTH ALIGNMENT

PI NUMBER	STATION	LATITUDE	LONGITUDE	NORTHING	EASTING	BEARING TO NEXT PI	DEFLECTION	DEFLECTION TO LEFT OR RIGHT	DISTANCE TO NEXT PI
DFN-1	0+00.00	29°18'17.4606"	89°43'36.0416"	296,290.40	3,792,918.56	N 65°09'48.4" E			625.00
DFN-2	6+25.00	29°18'19.9804"	89°43'29.5945"	296,552.92	3,793,485.75	S 77°58'00.0" E	36°52'11.6"	RIGHT	1,506.87
DFN-3	21+31.87	29°18'16.6657"	89°43'13.0004"	296,238.77	3,794,959.52	S 75°52'00.0" E	02°06'00.0"	RIGHT	3,010.28
DFN-4	51+42.15	29°18'08.9817"	89°42'40.1507"	295,503.72	3,797,878.68	S 74°49'30.0" E	01°02'30.0"	RIGHT	3,011.18
DFN-5	81+53.34	29°18'00.7709"	89°42'07.4576"	294,715.49	3,800,784.86	S 72°27'00.0" E	02°22'30.0"	RIGHT	3,006.93
DFN-6	111+60.27	29°17'51.3906"	89°41'35.2278"	293,808.78	3,803,651.83	S 72°42'30.0" E	00°15'30.0"	LEFT	2921.64
DFN-7	140+81.91	29°17'42.3982"	89°41'03.8673"	292,940.37	3,806,441.42				

DUNE FILL SOUTH ALIGNMENT

PI NUMBER	STATION	LATITUDE	LONGITUDE	NORTHING	EASTING	BEARING TO NEXT PI	DEFLECTION	DEFLECTION TO LEFT OR RIGHT	DISTANCE TO NEXT PI
DFS-1	0+00.00	29°18'17.4606"	89°43'36.0416"	296,290.40	3,792,918.56	S 83°06'34.0" E			502.02
DFS-2	5+02.02	29°18'16.7952"	89°43'30.4226"	296,230.17	3,793,416.96	S 77°58'00.0" E	05°08'34.0"	RIGHT	500.00
DFS-3	10+02.02	29°18'15.6954"	89°43'24.9165"	296,125.93	3,793,905.97	S 83°40'38.1" E	05°42'38.1"	LEFT	502.49
DFS-4	15+04.51	29°18'15.0781"	89°43'19.2849"	296,070.59	3,794,405.41	S 86°55'50.7" E	03°15'12.6"	LEFT	512.67
DFS-5	20+17.19	29°18'14.7351"	89°43'13.5078"	296,043.14	3,794,917.34	S 75°52'00.0" E	11°03'50.7"	RIGHT	3,001.59
DFS-6	50+18.78	29°18'07.0734"	89°42'40.7531"	295,310.22	3,797,828.08	S 74°49'30.0" E	01°02'30.0"	RIGHT	3,005.22
DFS-7	80+24.00	29°17'58.8789"	89°42'08.1248"	294,523.55	3,800,728.51	S 72°27'00.0" E	02°22'30.0"	RIGHT	3,003.23
DFS-8	110+27.23	29°17'49.5102"	89°41'35.9349"	293,617.96	3,803,591.95	S 72°42'30.0" E	00°15'30.0"	LEFT	2,499.61
DFS-9	135+26.84	29°17'41.8169"	89°41'09.1044"	292,874.98	3,805,978.59	S 85°37'43.8" E	12°55'13.8"	LEFT	403.11
DFS-10	139+29.95	29°17'41.4555"	89°41'04.5706"	292,844.26	3,806,380.52				

NO WORK ZONE BOUNDARY

POINT NUMBER	NORTHING	EASTING	LATITUDE	LONGITUDE
NWZ-1	293,773.63	3,806,718.09	29°17'50.607"	89°41'00.608"
NWZ-2	294,437.84	3,806,721.92	29°17'57.181"	89°41'00.456"
NWZ-3	294,520.94	3,807,744.57	29°17'57.858"	89°40'48.894"
NWZ-4	294,400.15	3,808,082.97	29°17'56.614"	89°40'45.092"
NWZ-5	294,151.93	3,808,109.68	29°17'54.153"	89°40'44.831"
NWZ-6	293,828.81	3,807,920.53	29°17'50.982"	89°40'47.020"

CONTAINMENT DIKE NORTH ALIGNMENT

PI NUMBER	STATION	LATITUDE	LONGITUDE	NORTHING	EASTING	BEARING TO NEXT PI	DEFLECTION	DEFLECTION TO LEFT OR RIGHT	DISTANCE TO NEXT PI
CDN-1	0+00.00	29°18'21.0528"	89°43'17.7314"	296,675.99	3,794,534.46	N 79°04'13.3" E			539.12
CDN-2	5+39.12	29°18'21.9909"	89°43'11.7370"	296,778.21	3,795,063.79	N 81°40'05.6" E	02°35'52.2"	RIGHT	578.55
CDN-3	11+17.67	29°18'22.7409"	89°43'05.2587"	296,862.04	3,795,636.24	S 86°04'14.3" E	12°15'40.1"	RIGHT	509.70
CDN-4	16+27.37	29°18'22.3241"	89°42'59.5215"	296,827.12	3,796,144.74	S 79°18'01.1" E	06°46'13.2"	RIGHT	501.00
CDN-5	21+28.36	29°18'21.3346"	89°42'53.9767"	296,734.10	3,796,637.02	S 84°57'23.2" E	05°39'22.1"	LEFT	506.69
CDN-6	26+35.05	29°18'20.8231"	89°42'48.2836"	296,689.55	3,797,141.75	S 75°52'00.0" E	09°05'23.2"	RIGHT	1,013.00
CDN-7	36+48.05	29°18'18.2370"	89°42'37.2292"	296,442.20	3,798,124.08	S 74°47'05.7" E	01°04'54.3"	RIGHT	3,067.71
CDN-8	67+15.76	29°18'09.8514"	89°42'03.9281"	295,637.10	3,801,084.27	S 72°28'08.8" E	02°18'56.9"	RIGHT	2,997.17
CDN-9	97+12.93	29°18'00.5108"	89°41'31.7987"	294,734.29	3,803,942.23	S 72°42'30.0" E	00°14'21.2"	LEFT	1,494.88
CDN-10	112+07.82	29°17'55.9098"	89°41'15.7523"	294,289.96	3,805,369.56	N 77°02'29.2" E	23°33'25.9"	LEFT	599.33
CDN-11	118+07.14	29°17'56.4725"	89°41'09.0140"	294,355.37	3,805,965.31	N 77°04'30.1" E	06°41'34.9"	LEFT	520.97
CDN-12	123+28.11	29°17'57.5567"	89°41'03.2617"	294,472.19	3,806,473.01	S 12°04'56.1" W	115°2'27.0"	RIGHT	442.92
CDN-13	127+71.03	29°17'53.2873"	89°41'04.4019"	294,039.52	3,806,378.27	S 11°33'51.4" E	23°38'47.5"	LEFT	503.10
CDN-14	132+74.13	29°17'48.4311"	89°41'03.2854"	293,550.45	3,806,484.17	S 75°59'18.7" E	64°25'27.3"	LEFT	510.26
CDN-15	137+84.39	29°17'47.1041"	89°40'57.7516"	293,423.48	3,806,976.05	S 33°30'12.1" W	109°29'30.7"	RIGHT	544.85
CDN-16	143+29.34	29°17'42.6498"	89°41'01.2217"	292,969.15	3,806,675.30	S 33°30'12.1" W	0	---	279.87
CDN-17	146+09.21	29°17'40.3618"	89°41'03.0041"	292,733.35	3,806,521.66				

CONTAINMENT DIKE SOUTH ALIGNMENT

PI NUMBER	STATION	LATITUDE	LONGITUDE	NORTHING	EASTING	BEARING TO NEXT PI	DEFLECTION	DEFLECTION TO LEFT OR RIGHT	DISTANCE TO NEXT PI
CDS-1	0+00.00	29°18'21.0528"	89°43'17.7314"	296,675.99	3,794,534.46	S 74°58'24.2" E			525.89
CDS-2	5+25.89	29°18'19.6324"	89°43'12.0170"	296,539.64	3,795,042.36	S 70°43'26.1" E	04°14'58.2"	RIGHT	502.02
CDS-3	10+27.91	29°18'17.9258"	89°43'06.6916"	296,373.92	3,795,516.24	S 71°51'45.0" E	01°08'18.9"	LEFT	501.22
CDS-4	15+29.13	29°18'16.3148"	89°43'01.3372"	296,217.89	3,795,992.56	S 75°03'52.5" E	03°12'07.5"	LEFT	500.05
CDS-5	20+29.18	29°18'14.9716"	89°42'55.9013"	296,089.01	3,796,475.72	S 74°41'29.3" E	03°22'23.2"	LEFT	1002.66
CDS-6	30+31.84	29°18'11.7207"	89°42'45.2014"	295,774.04	3,797,427.62	S 72°27'48.9" E	00°46'19.6"	LEFT	505.41
CDS-7	35+37.25	29°18'10.1458"	89°42'39.7833"	295,621.75	3,797,909.54	S 74°20'59.4" E	01°53'10.5"	LEFT	3014.41
CDS-8	65+51.66	29°18'01.6885"	89°42'07.1339"	294,808.58	3,800,812.19	S 72°27'00.0" E	01°53'59.4"	RIGHT	3008.72
CDS-9	95+60.38	29°17'52.3027"	89°41'34.8849"	293,901.33	3,803,680.87	S 72°42'30.0" E	00°15'30.0"	LEFT	3136.17
CDS-10	126+96.55	29°17'42.6498"	89°41'01.2217"	292,969.15	3,806,675.30				

BORROW AREA ALIGNMENT

PI NUMBER	STATION	LATITUDE	LONGITUDE	NORTHING	EASTING	BEARING TO NEXT PI	DEFLECTION	DEFLECTION TO LEFT OR RIGHT	DISTANCE TO NEXT PI
BA-1	0+00.00	29°16'30.6560"	89°50'46.2851"	284,988.33	3,754,969.01	S 38°01'55.8" E			2450.00
BA-2	24+50.00	29°16'11.3588"	89°50'29.5273"	283,058.50	3,756,478.41	S 46°34'08.1" E	08°32'12.3"	LEFT	3000.00
BA-3	54+50.00	29°15'50.6620"	89°50'05.2364"	280,996.08	3,758,656.99	S 25°14'24.2" W	71°48'32.3"	RIGHT	1650.00
BA-4	71+00.00	29°15'35.9794"	89°50'13.3991"	279,503.61	3,757,953.41				

BORROW AREA BOUNDARY

POINT NUMBER	NORTHING	EASTING	LATITUDE	LONGITUDE
1	285,357.98	3,755,441.62	29°16'34.2543"	89°50'40.8950"
2	283,428.15	3,756,951.02	29°16'14.9570"	89°50'24.1373"
3	281,133.16	3,759,384.94	29°15'51.9246"	89°49'56.9983"
4	279,247.74	3,758,496.12	29°15'33.3764"	89°50'07.3105"
5	279,759.44	3,757,410.69	29°15'38.5819"	89°50'19.4880"
6	280,859.00	3,757,929.04	29°15'49.3992"	89°50'13.4744"
7	282,688.86	3,756,005.80	29°16'07.7607"	89°50'34.9171"
8	284,618.68	3,754,496.40	29°16'27.0576"	89°50'51.6751"

SHEET: 9

REV.	DATE	BY	DESCRIPTION

DATE: OCT. 2007 | SHEET: 9 OF 29
DESIGNED: T.M.A. | DRAWN: R.P.G./J.S.D.
CHECKED: M.T.P. | SCALE: AS NOTED
STATE PROJECT NUMBER: BA-35
FEDERAL PROJECT NUMBER: BA-35
APPROVED BY: R.J.J.

LOUISIANA DEPARTMENT OF NATURAL RESOURCES
PASS CHALAND TO GRAND BAYOU PASS
BARRIER SHORELINE RESTORATION (BA-35)
BEACH/DUNE FILL, CONTAINMENT DIKE, AND BORROW AREA ALIGNMENT TABLES

STB GROUP L.L.C.
P.O. BOX 1751
BATON ROUGE, LA. 70821
PHONE (225) 769-3400
FAX (225) 769-3409

COASTAL ENGINEERING CONSULTANTS
PH: (239) 643-2324
FAX: (239) 643-7114
3106 SOUTH HORSESHOE DRIVE
NAPLES, FLORIDA 34104

JET PROBE HITS

DESIGNATION	LATITUDE	LONGITUDE	NORTHING	EASTING
1C	29°19'08.9645"	89°31'13.7799"	302,472.89	3,858,547.54
1D	29°16'38.4987"	89°57'34.5336"	285,329.16	3,718,806.01
1E	29°16'42.8774"	89°33'40.6174"	287,514.50	3,845,778.44
2A	29°17'03.9762"	90°07'09.8977"	287,327.27	3,667,826.28
2B	29°18'53.5506"	89°31'57.4789"	300,855.07	3,854,704.01
2C	29°27'58.0390"	90°06'57.1679"	353,404.69	3,668,251.58
2D	29°09'23.1758"	89°26'39.2079"	243,700.47	3,883,826.54
2E	29°33'36.9499"	89°55'34.0109"	388,328.20	3,728,215.66
2F	29°27'09.0143"	89°52'19.0718"	349,360.23	3,745,929.74
3A	29°10'44.9400"	90°03'09.4662"	249,273.31	3,689,544.67
3B	29°07'30.3017"	90°11'16.2429"	229,156.05	3,646,591.30
3C	29°13'20.5086"	90°14'17.9299"	264,373.01	3,630,138.96
4A	29°02'07.3769"	89°29'37.0160"	199,427.06	3,868,769.28
4B	29°02'25.4427"	89°42'21.4223"	200,225.23	3,800,890.30
4C	29°00'15.0641"	89°34'20.1223"	187,688.04	3,843,813.73
4D	29°01'02.3048"	89°37'32.8833"	192,200.56	3,826,626.76
4E	29°00'33.7436"	89°35'32.7130"	189,476.27	3,837,339.52
4F	29°02'53.9135"	89°31'49.7303"	203,940.18	3,856,914.98
5A	29°02'07.9197"	89°27'51.9283"	199,632.84	3,878,096.42
5B	29°09'13.9696"	90°05'32.9143"	239,944.56	3,676,928.40

NOTE :
JET PROBE AND MAGNETOMETER HITS ARE SHOWN ON SHEETS 23 & 24.

WARNING SIGNS

TYPE	LATITUDE	LONGITUDE	NORTHING	EASTING
SHOAL SIGN	29°18'10.8438"	89°44'13.1539"	295,576.15	3,789,642.33
SHOAL SIGN	29°18'18.6984"	89°44'11.1210"	296,372.01	3,789,811.25
SHOAL SIGN	29°18'09.5119"	89°44'06.7404"	295,449.55	3,790,212.00
SHOAL SIGN	29°18'17.5032"	89°44'05.2154"	296,258.58	3,790,335.75
RED DAY MARKER	29°18'02.1629"	89°44'11.2938"	294,701.64	3,789,819.23
RED DAY MARKER	29°18'09.2963"	89°44'09.4400"	295,424.44	3,789,973.31
RED DAY MARKER	29°18'19.5697"	89°44'06.7709"	296,465.39	3,790,195.14
RED DAY MARKER	29°18'25.7903"	89°44'05.4560"	297,095.32	3,790,302.78
GREEN DAY MARKER	29°18'02.5146"	89°44'13.0557"	294,735.00	3,789,662.75
GREEN DAY MARKER	29°18'09.6481"	89°44'11.2020"	295,457.79	3,789,816.82
GREEN DAY MARKER	29°18'19.8564"	89°44'08.5484"	296,492.15	3,790,037.37
GREEN DAY MARKER	29°18'26.1226"	89°44'07.2229"	297,126.70	3,790,145.89

SETTLEMENT PLATES

DESIGNATION	LATITUDE	LONGITUDE	NORTHING	EASTING
SP-1	29°18'18.0995"	89°43'06.3977"	296,391.83	3,795,542.01
SP-2	29°18'14.4996"	89°42'32.6010"	296,070.51	3,798,539.17
SP-3	29°18'06.6575"	89°42'34.9960"	295,275.43	3,798,338.36
SP-4	29°18'01.4413"	89°42'13.2032"	294,775.96	3,800,275.22
SP-5	29°18'05.6975"	89°41'59.8986"	295,222.63	3,801,446.99
SP-6	29°17'56.0999"	89°41'27.8982"	294,293.74	3,804,293.95

ACCESS CHANNEL PLUGS

STATION	NORTHING	EASTING	LATITUDE	LONGITUDE
120+00	296,624.59	3,798,157.40	29°18'20.0378"	89°42'36.8238"
140+00	296,103.67	3,800,117.19	29°18'14.6060"	89°42'14.7746"
160+00	295,522.38	3,802,097.02	29°18'08.5729"	89°41'52.5095"
180+00	294,919.30	3,804,003.93	29°18'02.3333"	89°41'31.0721"

OVERBURDEN DISPOSAL AREA BOUNDARY

POINT NUMBER	NORTHING	EASTING	LATITUDE	LONGITUDE
1	289,000.00	3,767,800.00	29°17'08.6957"	89°48'20.8167"
2	289,000.00	3,772,400.00	29°17'08.0858"	89°47'28.8764"
3	284,200.00	3,772,400.00	29°16'20.5719"	89°47'29.6057"
4	284,200.00	3,767,800.00	29°16'21.1817"	89°48'21.5392"

SHEET: 10

REV.	DATE	BY	DESCRIPTION

DATE: OCT. 2007 | SHEET: 10 OF 29
DESIGNED: T.M.A. | DRWN: R.P.Q./J.S.D.
CHECKED: M.T.P. | SCALE: AS NOTED
STATE PROJECT NUMBER: BA-35
FEDERAL PROJECT NUMBER: BA-35
APPROVED BY: R.J.J.

LOUISIANA DEPARTMENT OF NATURAL RESOURCES
PASS CHALAND TO GRAND BAYOU PASS
BARRIER SHORELINE RESTORATION (BA-35)
DISPOSAL AREA, SETTLEMENT PLATE, AND
WARNING SIGN ALIGNMENT TABLES

STB GROUP L.L.C.
P.O. BOX 1731
BATON ROUGE, LA. 70821
PHONE (225) 769-3400
FAX (225) 769-3398

COASTAL ENGINEERING CONSULTANTS INC.
PH: (239) 643-2324
FAX: (239) 643-1143
3106 SOUTH HORSESHOE DRIVE
NAPLES, FLORIDA 34104

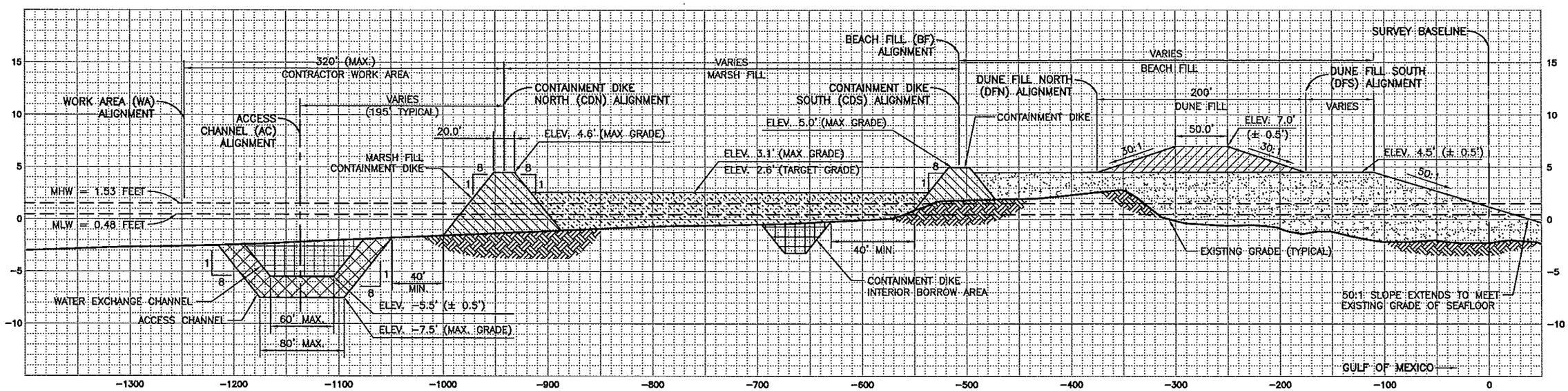

SCALES: HORIZONTAL: 1"=100'
VERTICAL: 1"=10'

ELEVATIONS ARE NAVD88 (GEOID99) FEET

TYPICAL CROSS SECTION PERPENDICULAR TO SURVEY BASELINE

NOTES:

1. THE TYPICAL CROSS SECTION IS A COLLECTIVE REPRESENTATION OF PROJECT DESIGN FEATURES AND SPECIFICATIONS. THE CONTRACTOR SHALL REFER TO SPECIFIC CROSS SECTIONS ON SHEETS 25–29, FOR DEVIATIONS FROM THE TYPICAL CROSS SECTIONS.
2. THE ACCESS CHANNEL SHALL BE PLUGGED TO ±0.5' OF PRE–CONSTRUCTION GRADE AND 50' LONG AT POST–CONSTRUCTION CHANNEL PLUG LOCATIONS (CENTERED AT STATIONS 120+00, 140+00, 160+00, AND 180+00). THE CONTRACTOR MAY STOCKPILE PLUG MATERIAL AT LOCATIONS APPROVED BY THE ENGINEER WITHIN THE WORK AREA.
3. THE ACCESS CHANNEL SHALL HAVE A MAXIMUM BOTTOM CUT WIDTH OF 80' ALONG CHANNEL ALIGNMENT POINTS AC–1 TO AC–8. THE ACCESS CHANNEL SHALL HAVE A MAXIMUM BOTTOM CUT WIDTH OF 120' ALONG CHANNEL ALIGNMENT POINTS AC–8 TO AC–9. THE ACCESS CHANNEL SHALL HAVE A MAXIMUM BOTTOM CUT WIDTH OF 60' ALONG CHANNEL ALIGNMENT POINTS AC–9 TO WE–1. THE WATER EXCHANGE CHANNEL SHALL HAVE A MAXIMUM BOTTOM CUT WIDTH OF 60' ALONG CHANNEL ALIGNMENT POINTS WE–1 TO WE–9. THE ACCESS CHANNEL SHALL HAVE A MAXIMUM BOTTOM CUT WIDTH OF 80' ALONG CHANNEL ALIGNMENT POINTS WE–9 TO AC–33.
4. OPTIONAL INTERIOR CONTAINMENT DIKES (ICD) MAY BE USED WITHIN THE MARSH FILL TEMPLETE. IF USED, THE ICD'S MUST BE ALIGNED PERPENDICULAR TO THE SURVEY BASELINE. THE MAXIMUM ICD FILL ELEVATION SHALL BE NO HIGHER THEN THE MARSH FILL MAXIMUM OF 3.1' NAVD88 (GEOID99). THE LOCATIONS OF THE OPTIONAL ICD SHOULD BE INCLUDED IN THE WORK PLAN AND APPROVED BY THE ENGINEER.
5. IF USED, ANY INTERIOR BORROW AREAS EXCAVATED TO CONSTRUCT THE CONTAINMENT DIKES SHALL BE LOCATED A MINIMUM OF 40' FROM THE TOE OF THE CONTAINMENT DIKE AND SHALL ADHERE TO ALL PIPELINE AVOIDANCE REQUIREMENTS SETFORTH IN GP–28 "UTILITIES AND IMPROVEMENTS"

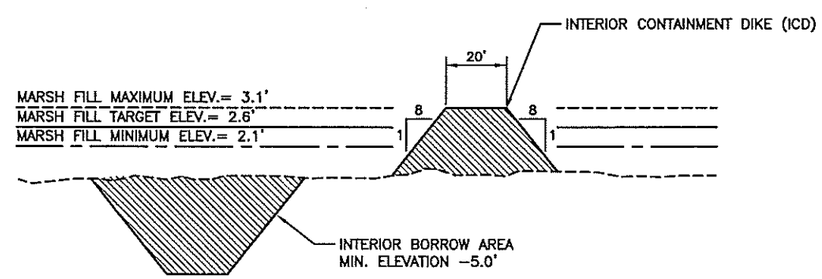

TYPICAL CROSS SECTION OPTIONAL INTERIOR CONTAINMENT DIKE (ICD) MARSH FILL AREA

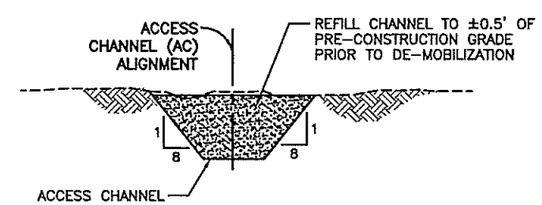

TYPICAL CROSS SECTION POST–CONSTRUCTION CHANNEL PLUG

SHEET: 11

REV.	DATE	BY	DESCRIPTION

DATE: OCT. 2007 | SHEET: 11 OF 29
DESIGNED: T.M.A. | DRAWN: R.J.J./J.S.D.
CHECKED: M.T.P. | SCALE: AS NOTED
STATE PROJECT NUMBER: BA–35
FEDERAL PROJECT NUMBER: BA–35
APPROVED BY: R.J.J.

LOUISIANA DEPARTMENT OF NATURAL RESOURCES
PASS CHALAND TO BARRIER SHORELINE RESTORATION (BA–35)
FILL AREA AND ACCESS CHANNEL
TYPICAL SECTION

STB GROUP LLC.
P.O. BOX 1751 BATON ROUGE, LA. 70821
PHONE (225) 769–3400 FAX (225) 769–3386

COASTAL ENGINEERING CONSULTANTS INC.
PH: (239) 643–2324
FAX: (239) 643–7147
3106 SOUTH HORSESHOE DRIVE
NAPLES, FLORIDA 34104

SCALES: HORIZONTAL: 1"=100'
VERTICAL: 1"=10'

ELEVATIONS ARE NAVD88 (GEOID99) FEET

NOTES:

1. SIDECAST DISPOSAL AREAS SHALL BE MARKED DURING CONSTRUCTION IN ACCORDANCE WITH USCG STANDARDS. UPON DEMOBILIZATION, SIDECAST DISPOSAL AREAS SHALL BE RESTORED TO ± 0.5' OF PRE-CONSTRUCTION GRADE UPON DEMOBILIZATION.

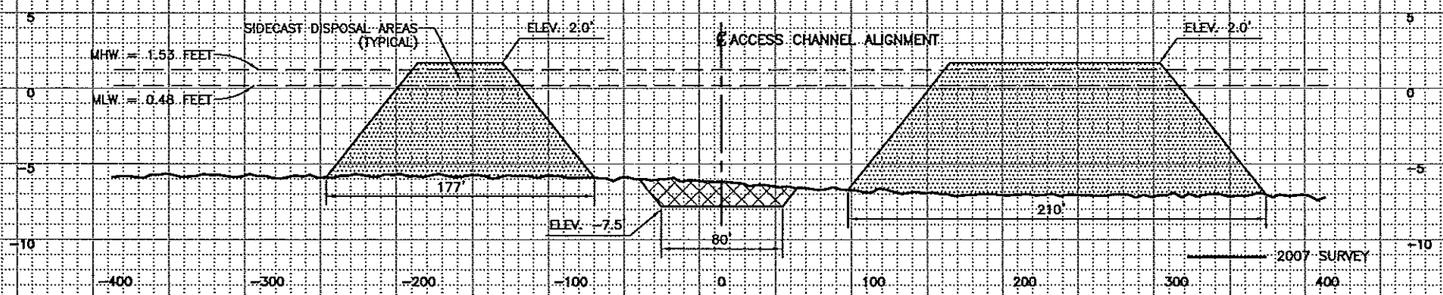

PC A-A

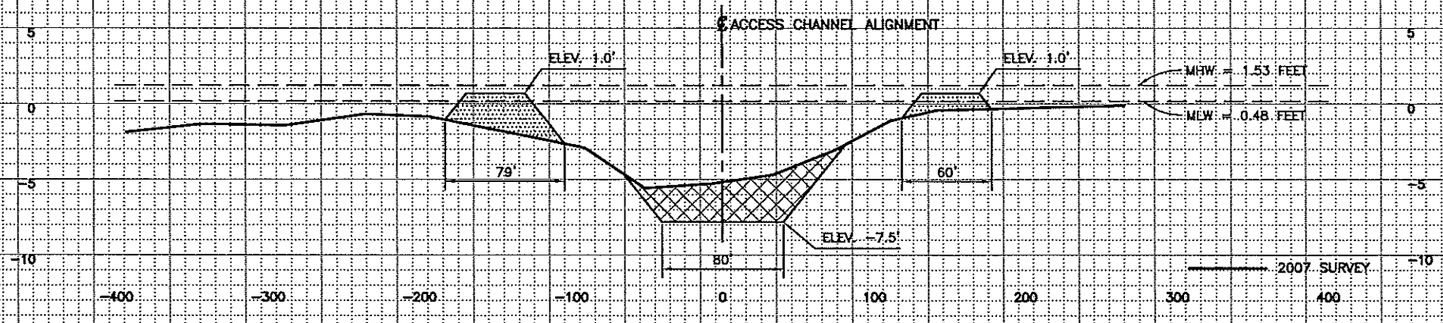

PC B-B

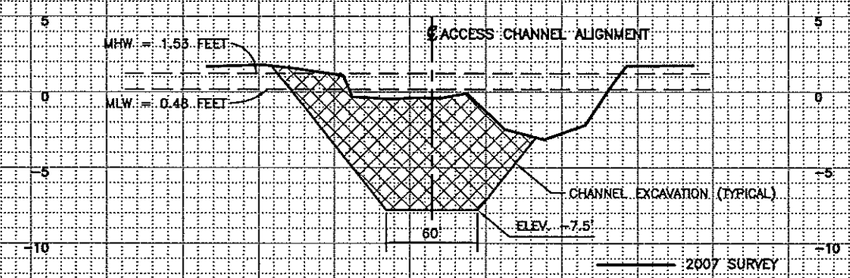

PC C-C

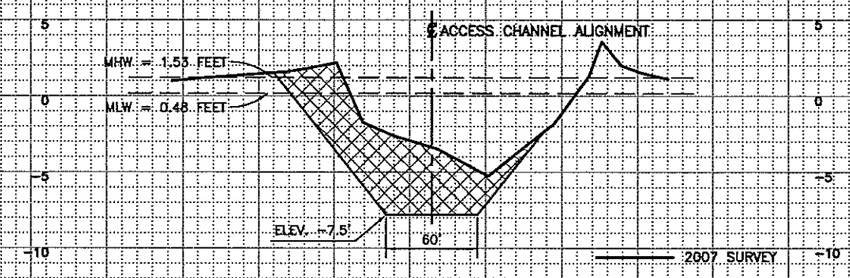

PC D-D

BENCH MARK STATION NAME: "RONQUILLE 2"
LOCATION: ADJUSTED NAD83 GEODETIC POSITION
LAT. 29°18'25.65099"N
LONG. 89°43'29.14084"W

ADJUSTED NAD 1983 DATUM LSZ (1702) FEET
N= 297,126.23
E= 3,793,517.87
GEOID03(05) HEIGHT = -24.020 METERS
ELLIPSOID HEIGHT = -22.172 METERS

MEASURED ELEVATION OF BENCHMARK REFERENCED TO GEOID99
ON APRIL 18, 2007 = 6.444 FEET

MEASURED ELEVATION OF BENCHMARK REFERENCED TO GEOID03(05)
ON APRIL 18, 2007 = 6.066 FEET

TIDAL DATUM REFERENCED TO NOS STATION 8761724 "GRAND ISLE, EAST POINT, LA"
TIDAL EPOCH 1960 – 1978 (5-YEAR SPECIAL UPDATE)
ADJUSTED FOR NAVD88 (GEOID99)

SHEET: 12

REV.	DATE	BY	DESCRIPTION

DATE: OCT. 2007 | SHEET: 12 OF 28
DESIGNED: T.M.A. | DRAWN: R.P.G./J.S.D.
CHECKED: M.T.P. | SCALE: AS NOTED
STATE PROJECT NUMBER: BA-35
FEDERAL PROJECT NUMBER: BA-35
APPROVED BY: R.J.J.

LOUISIANA DEPARTMENT OF NATURAL RESOURCES

PASS CHALAND TO GRAND BAYOU PASS
BARRIER SHORELINE RESTORATION (BA-35)

PASS CHALAND (PC) ACCESS CHANNEL
CROSS SECTIONS

SJB GROUP LLC.
PHONE (225) 769-3400
FAX (225) 769-3399
P.O. BOX 1751
BATON ROUGE, LA. 70821

COASTAL ENGINEERING CONSULTANTS INC.
PH: (239) 643-2324
FAX: (239) 643-1143
3106 SOUTH HORSESHOE DRIVE
NAPLES, FLORIDA 34104

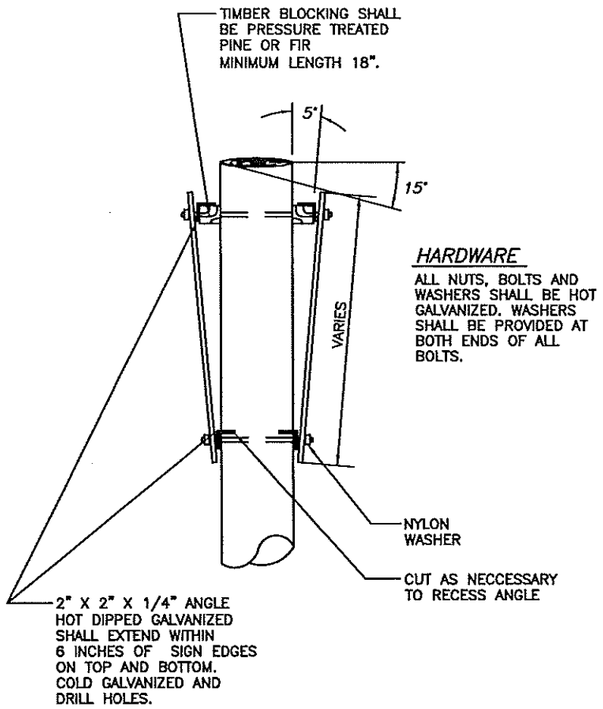

HARDWARE

ALL NUTS, BOLTS AND WASHERS SHALL BE HOT GALVANIZED. WASHERS SHALL BE PROVIDED AT BOTH ENDS OF ALL BOLTS.

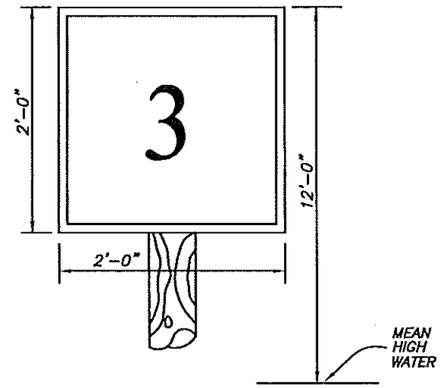

GREEN DAY MARKER (G)

NOT TO SCALE

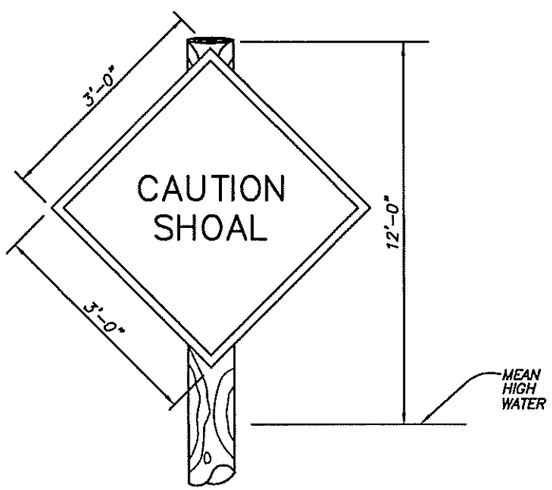

SHOAL SIGN (S)

NOT TO SCALE

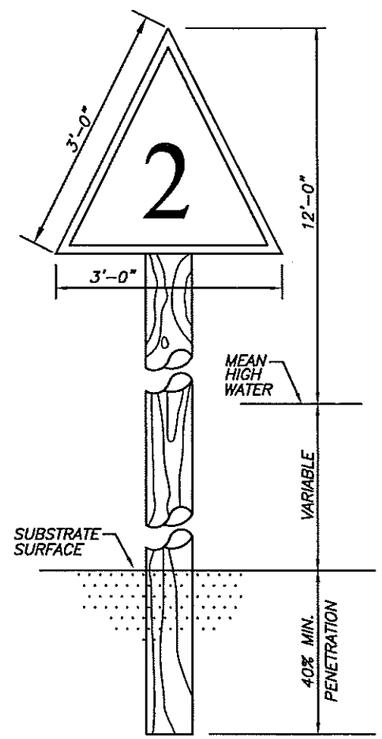

RED DAY MARKER (R)

NOT TO SCALE

WARNING SIGN NOTES:

1. TWELVE SIGNS SHALL BE INSTALLED AT LOCATIONS ON SHEET 4.
2. ALL SIGNS MUST MEET U.S. COAST GUARD STANDARDS IN ACCORDANCE WITH 33 CFR 330.4 (a) (1) WHICH CAN BE DOWNLOADED AT http://www.access.gpo.gov/nara/cfr/waisidx_02/33cfr330_02.html
3. THE SIGNS SHALL HAVE DIMENSIONS AND MESSAGES SHOWN. THERE ARE TWO SIGNS PER PILE.
4. THE SIGNS SHALL BE CONSTRUCTED WITH 125 GAUGE 61TS ALUMINUM, COVERED WITH WHITE, ENGINEER GRADE, REFLECTING SHEETING; BLACK SCREENED LETTERING AND DESIGN; AND ORANGE, ENGINEER GRADE REFLECTIVE BORDER.
5. TIMBER PILING SHALL BE 40-FEET IN LENGTH WITH A NOMINAL 12-INCH DIAMETER BUTT AND 7-INCH MINIMUM DIAMETER AT THE TIP.
6. HARDWARE FOR TIMBER CONNECTIONS SHALL BE HOT DIP GALVANIZED IN ACCORDANCE WITH SECTION 811.5 OF THE LOUISIANA STANDARD SPECIFICATIONS FOR ROADS AND BRIDGES, AS PUBLISHED BY THE LOUISIANA DEPARTMENT OF TRANSPORTATION AND DEVELOPMENT, LATEST EDITION.
7. THE CONTRACTOR HAS THE OPTION OF USING TEMPORARY BUOYS IN LIEU OF TIMBER PILES. BUOYS MUST BE APPROVED BY THE OWNER AND ENGINEER PRIOR TO MOBILIZATION AND MEET USCG STANDARDS.
8. SIGNS AND SUPPORTS SHALL BE REMOVED AND PROPERLY DISPOSED OF PRIOR TO DEMOBILIZATION IN ACCORDANCE WITH TS-16. IF PILES CANNOT BE REMOVED COMPLETELY, THEY MUST BE REMOVED TO 5 FOOT BELOW THE EXISTING MUDLINE

REV.	DATE	BY	DESCRIPTION

DATE: OCT. 2007 | SHEET: 13 OF 29
DESIGNED: T.M.A. | DRAWN: R.P.G./L.S.D.
CHECKED: M.T.P. | SCALE: AS NOTED
STATE PROJECT NUMBER: BA-35
FEDERAL PROJECT NUMBER: BA-35
APPROVED BY: R.J.J.

LOUISIANA DEPARTMENT OF NATURAL RESOURCES

PASS CHALAND TO GRAND BAYOU PASS BARRIER SHORELINE RESTORATION (BA-35)

NAVIGATIONAL AND SHOAL SIGN DETAILS

SJB GROUP L.L.C.
P.O. BOX 1751 BATON ROUGE, LA. 70821
PHONE: (225) 769-3400 FAX: (225) 769-3399

COASTAL ENGINEERING CONSULTANTS INC.
PH: (239) 643-2324 FAX: (239) 643-1143
3106 SOUTH HORSESHOE DRIVE NAPLES, FLORIDA 34104

MARSH CREATION GRADE STAKE NOTES:

1. SEE SPECIFICATION TS–15 "MARSH FILL GRADE STAKES" FOR GRADE STAKE PLACEMENT
2. THE SIGNS SHALL HAVE THE DIMENSIONS, NUMBERING, AND SHADING AS SHOWN.
3. THE GAUGE SIGN SHALL BE CONSTRUCTED OF 0.120" THICK FIBERGLASS REINFORCED PLASTIC (FRP) WHICH HAS BEEN UV STABILIZED FOR OUTDOOR WEATHERABILITY. THE FRP MATERIAL SHALL BE WHITE OR GRAY IN COLOR AND BE TOTALLY DIELECTRIC AND NON–CONDUCTIVE. THE FRP MATERIAL STRENGTH AND IMPACT RESISTANCE SHOULD NOT BE APPRECIABLY AFFTECED OVER A TEMPERATURE RANGE OF –65 TO +212 DEGREES FAHRENHEIT.
4. THE MARSH FILL GRADE STAKES SHALL HAVE ELEVATION DELINEATIONS FOR MINIMUM, TARGET, AND MAXIMUM ELEVATIONS AS STATED IN SECTION TS–9.4 "MARSH FILL ELEVATION TOLERANCE" OF THE BA–35 TECHNICAL SPECIFICATIONS WITH BACKGROUND SHADING AS SHOWN.
5. THIS WORK CONSISTS OF FURNISHING, ASSEMBLING, AND INSTALLING THE REQUIRED MATERIAL FOR MARSH FILL GRADE STAKES IN ACCORDANCE WITH SPECIFICATIONS TS–15 "MARSH FILL GRADE STAKES". THE MARSH FILL GRADE STAKES SHALL BE USED BY THE CONTRACTOR TO MONITOR ELEVATIONS OF THE MARSH FILL WITHIN THE FILL AREA. IF MARSH FILL AREAS ARE DEEMED INACCESSIBLE BY THE ENGINEER FOR PAYMENT SURVEYS AFTER PLACEMENT OF THE FILL, THE CONTRACTOR SHALL USE THE MARSH FILL GRADE STAKES TO DETERMINE PAYMENT ELEVATIONS AND VOLUMES.. IN SUCH CASE, THE CONTRACTOR SHALL DETERMINE MARSH ELEVATIONS FROM VISUAL INSPECTIONS OF THE MARSH FILL GRADE STAKES UNDER DIRECT SUPERVISION OF THE INSPECTOR.

SETTLEMENT PLATE NOTES:

1. SETTLEMENT PLATES SHALL BE INSTALLED AT BORING LOCATIONS AS SHOWN ON SHEETS 5 AND 6.
2. THE SETTLEMENT PLATES SHALL BE SURVEYED UNDER THE SUPERVISION OF THE INSPECTOR WITHIN A DAY OF INSTALLATION AND WEEKLY THROUGHOUT THE DURATION OF THE PROJECT.
3. SETTLEMENT PLATES SHALL BE BUILT USING ASTM A36 STEEL AND HOT–DIPPED GALVANIZED AFTER FABRICATION PER SPECIFICATION TS–14 "SETTLEMENT PLATES".
4. ALL SETTLEMENT PLATES MUST BE INSTALLED AND MAINTAINED WITHIN 10.5 DEGREES OF VERTICAL.
5. ALL SETTLEMENT PLATES SHALL BE MARKED WITH SURVEY FLAGGING.
6. LENGTH OF SETTLEMENT PLATE RISER PIPE SHALL BE SUCH THAT THE ELEVATION OF THE WELDED CAP BE NO LESS THAN 4 FEET ABOVE THE MAXIMUM FINAL DESIGN GRADE FOR ITS LOCATION.

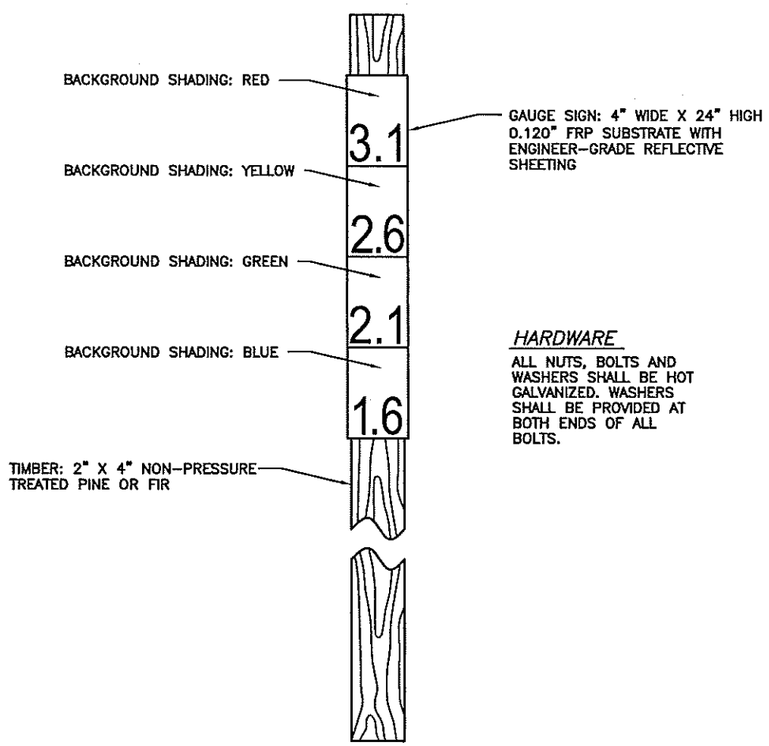

MARSH FILL GRADE STAKE
NOT TO SCALE

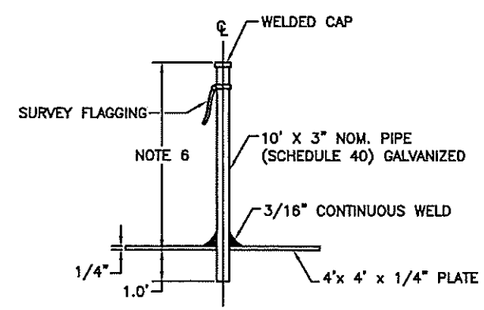

SETTLEMENT PLATE
NOT TO SCALE

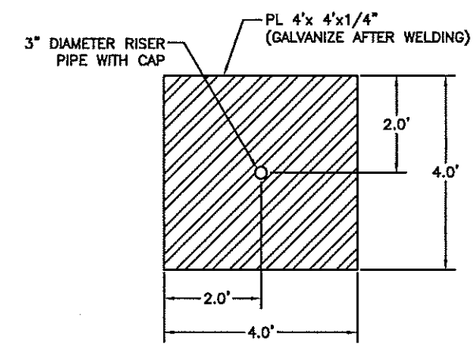

PLATE DETAIL
NOT TO SCALE

SHEET: 14

REV.	DATE	BY	DESCRIPTION

DATE: OCT. 2007 | SHEET: 14 OF 29
DESIGNED: T.M.A. | DRAWN: R.P.O./J.S.D.
CHECKED: M.T.P. | SCALE: AS NOTED
STATE PROJECT NUMBER: BA–35
FEDERAL PROJECT NUMBER: BA–35
APPROVED BY: R.J.J.

LOUISIANA DEPARTMENT OF NATURAL RESOURCES
PASS CHALAND TO GRAND BAYOU PASS BARRIER SHORELINE RESTORATION (BA–35)
MARSH CREATION GRADE STAKE AND SETTLEMENT PLATE DETAILS

SJB GROUP L.L.C.
P.O. BOX 1751 BATON ROUGE, LA. 70821
PHONE (225) 769–3400 FAX (225) 769–3598

COASTAL ENGINEERING CONSULTANTS INC.
PH: (239) 643–2324 FAX: (239) 643–1143
3106 SOUTH HORSESHOE DRIVE NAPLES, FLORIDA 34104

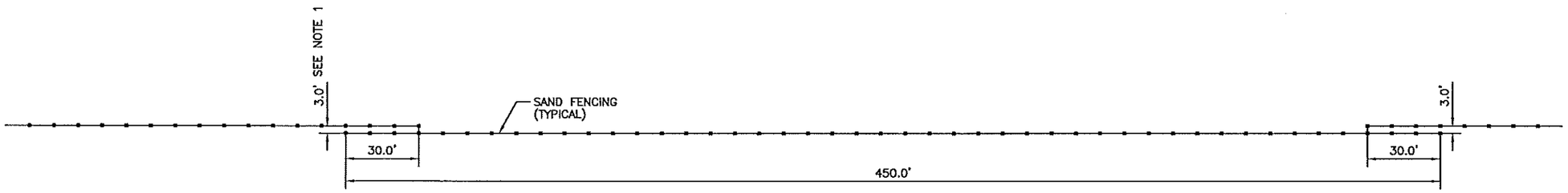

FENCING GAPING DIMENSIONS

SCALE: 1" = 50'

NOTE 1: THE DISTANCE BETWEEN FENCES SHALL BE INCREASED FROM 3.0' TO 6.0' AT EVERY FIFTH GAP TO ALLOW ALL-TERAIN VEHICLE ACCESS.

2: SEE TS-13 "SAND FENCING" FOR DETAILED MATERIAL SPECIFICATIONS.

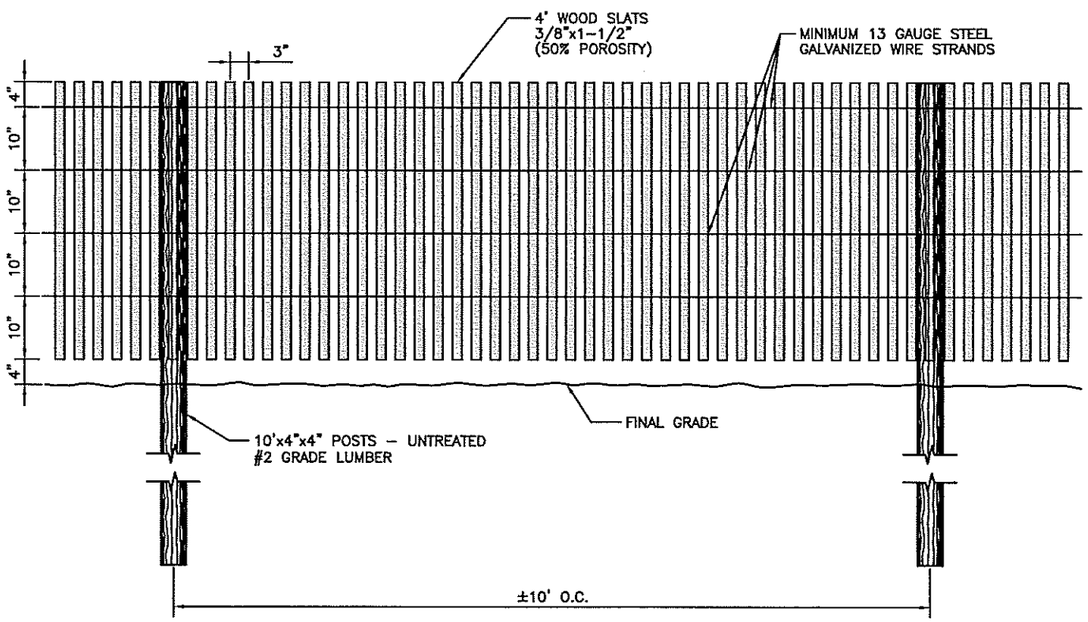

FENCING DETAIL

SCALE: 1/2" =1'-0"

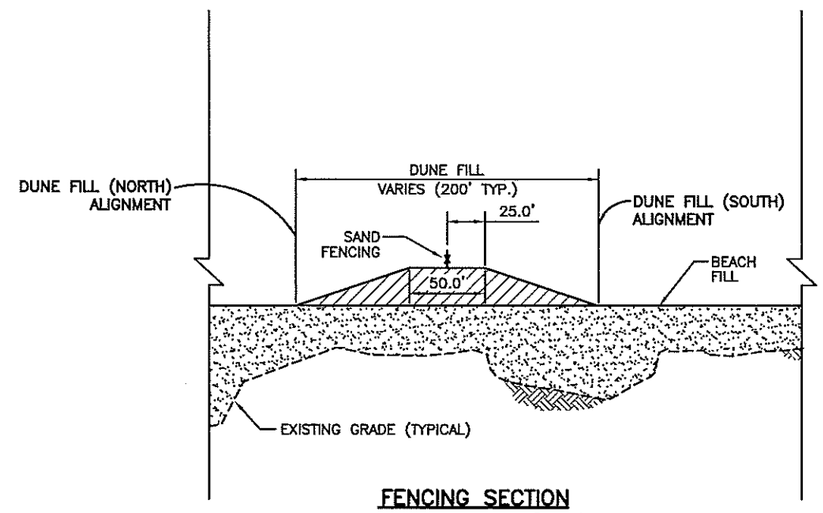

FENCING SECTION

SCALES: HORIZONTAL: 1"=100'
VERTICAL: 1"=10'

SHEET: 15

REV.	DATE	BY	DESCRIPTION

DATE: OCT. 2007 | SHEET: 15 OF 29
DESIGNED: T.M.A. | DRAWN: R.P.G./J.S.D.
CHECKED: M.T.P. | SCALE: AS NOTED
STATE PROJECT NUMBER: BA-35
FEDERAL PROJECT NUMBER: BA-35
APPROVED BY: R.J.J.

LOUISIANA DEPARTMENT OF NATURAL RESOURCES
PASS CHALAND TO GRAND BAYOU PASS
BARRIER SHORELINE RESTORATION (BA-35)
SAND FENCING DETAILS

STB GROUP L.L.C.
P.O. BOX 1731
BATON ROUGE, LA. 70821
PHONE (225) 769-3400
FAX (225) 769-3596

COASTAL ENGINEERING CONSULTANTS INC.
PH: (239) 643-2324
FAX: (239) 643-1143
3106 SOUTH HORSESHOE DRIVE
NAPLES, FLORIDA 34104

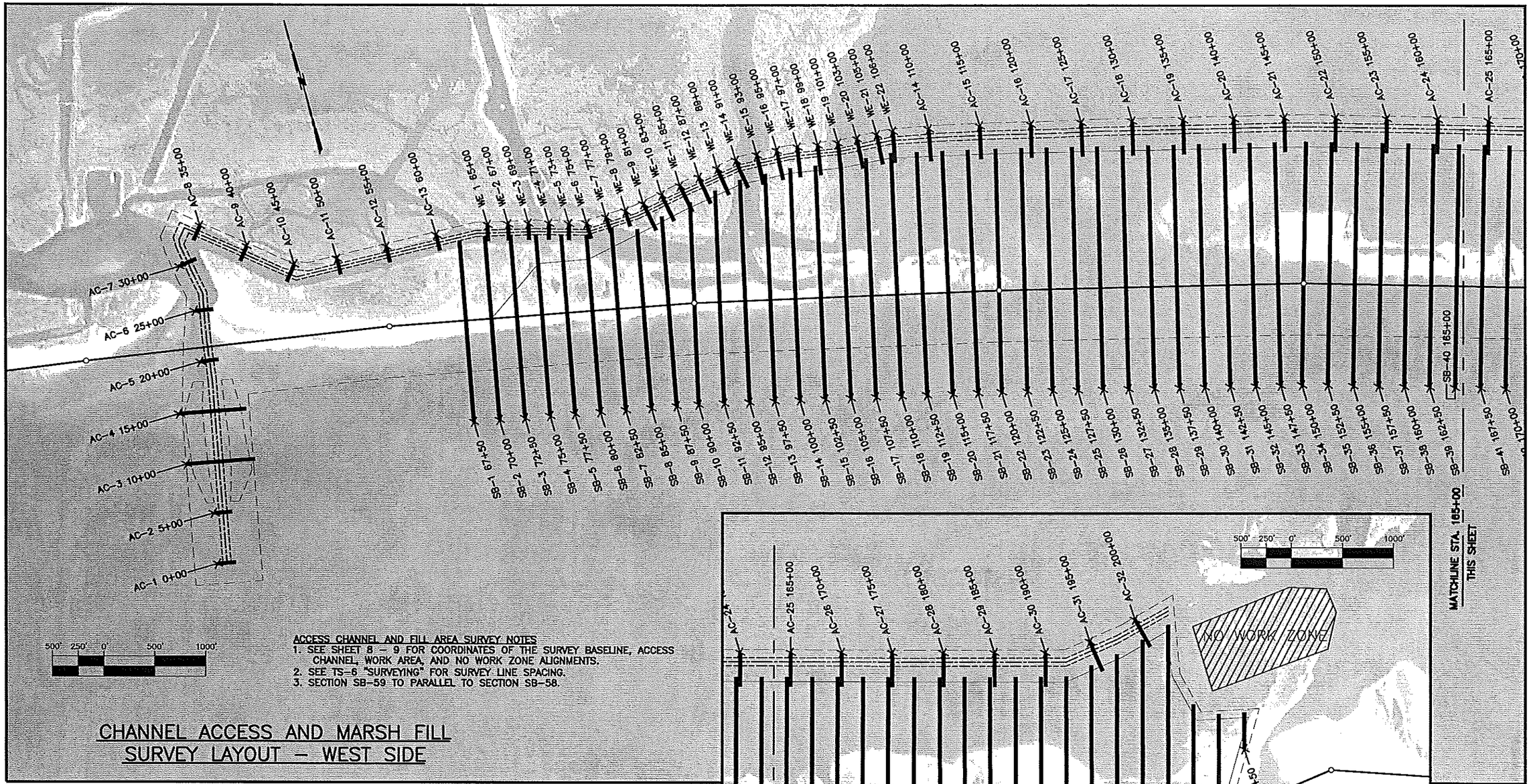

ACCESS CHANNEL AND FILL AREA SURVEY NOTES
1. SEE SHEET 8 – 9 FOR COORDINATES OF THE SURVEY BASELINE, ACCESS CHANNEL, WORK AREA, AND NO WORK ZONE ALIGNMENTS.
2. SEE TS-6 "SURVEYING" FOR SURVEY LINE SPACING.
3. SECTION SB-59 TO PARALLEL TO SECTION SB-58.

CHANNEL ACCESS AND MARSH FILL SURVEY LAYOUT – WEST SIDE

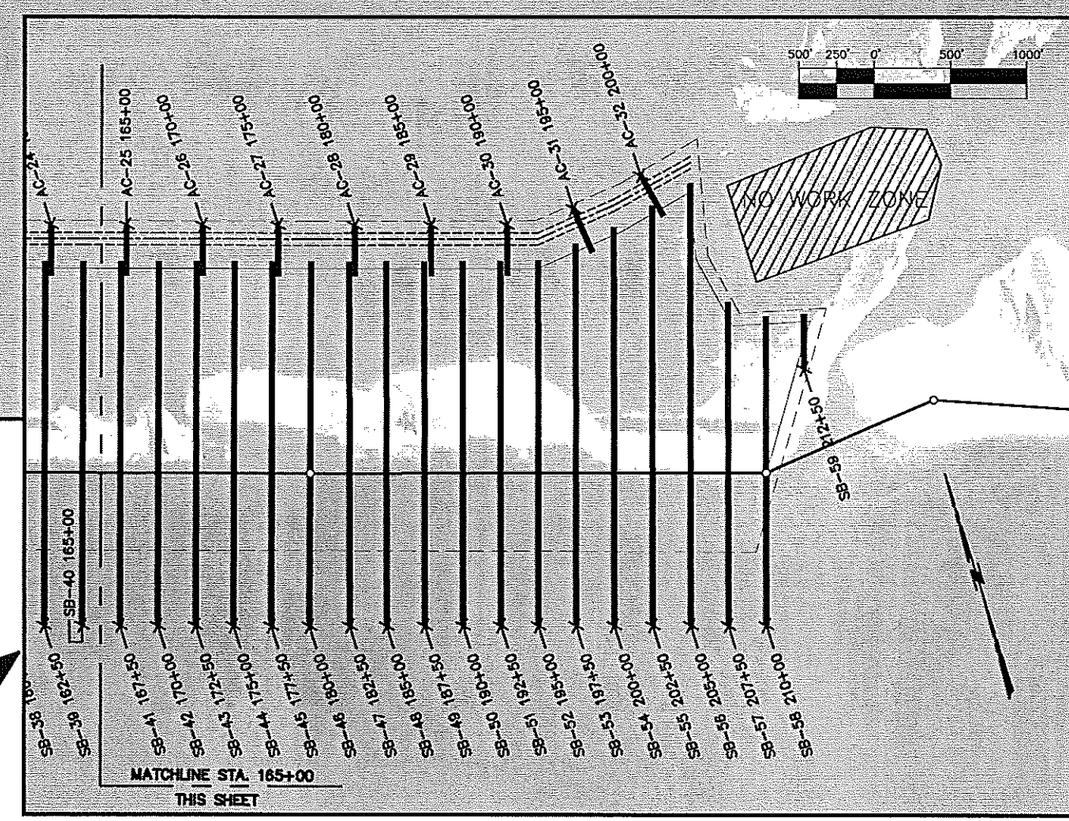

LEGEND

- SURVEY BASELINE POINT OF INTERSECTION
- WORK AREA BOUNDARY
- MARSH FILL (MF) ALIGNMENT
- ACCESS CHANNEL ALIGNMENT (AC) CENTERLINE AND CHANNEL BOTTOM
- SECTION TO BE SURVEYED

SECTION DESIGNATIONS:

AC–1 0+00
SECTION TYPE
SECTION NUMBER
SECTION STATION

SECTION TYPES
AC = ACCESS CHANNEL
WE = WATER EXCHANGE CHANNEL
SB = SURVEY BASE LINE

CHANNEL ACCESS AND MARSH FILL SURVEY LAYOUT – EAST SIDE

SHEET: 16

REV.	DATE	BY	DESCRIPTION

DATE: OCT. 2007
DESIGNED: T.M.A.
CHECKED: M.T.P.
SHEET: 16 OF 29
DRAWN: R.P.G./J.S.D.
SCALE: AS NOTED
STATE PROJECT NUMBER: BA–35
FEDERAL PROJECT NUMBER: BA–35
APPROVED BY: R.J.J.

LOUISIANA DEPARTMENT OF NATURAL RESOURCES
PASS CHALAND TO GRAND BAYOU PASS BARRIER SHORELINE RESTORATION (BA–35)
ACCESS CHANNEL AND FILL AREA SURVEY LAYOUT

STB GROUP LLC.
P.O. BOX 1731 BATON ROUGE, LA. 70821
PHONE (225) 769-3400 FAX (225) 769-3596

COASTAL ENGINEERING CONSULTANTS INC.
PH: (239) 643-2324
FAX: (239) 643-1143
3106 SOUTH HORSESHOE DRIVE NAPLES, FLORIDA 34104

NOTES:

1. SEE SHEET 9 FOR COORDINATES OF BORROW AREA BOUNDARY AND ALIGNMENT
2. SEE SHEETS 19 AND 20 FOR BORROW AREA CENTERLINE PROFILE AND CROSS SECTIONS (A–A – D–D).
3. SEE SECTION TS–8 "DREDGING" OF THE SPECIFICATIONS FOR BORROW AREA AND DREDGING DETAILS.
4. SEE APPENDIX C OF THE SPECIFICATIONS FOR VIBRACORE DATA.

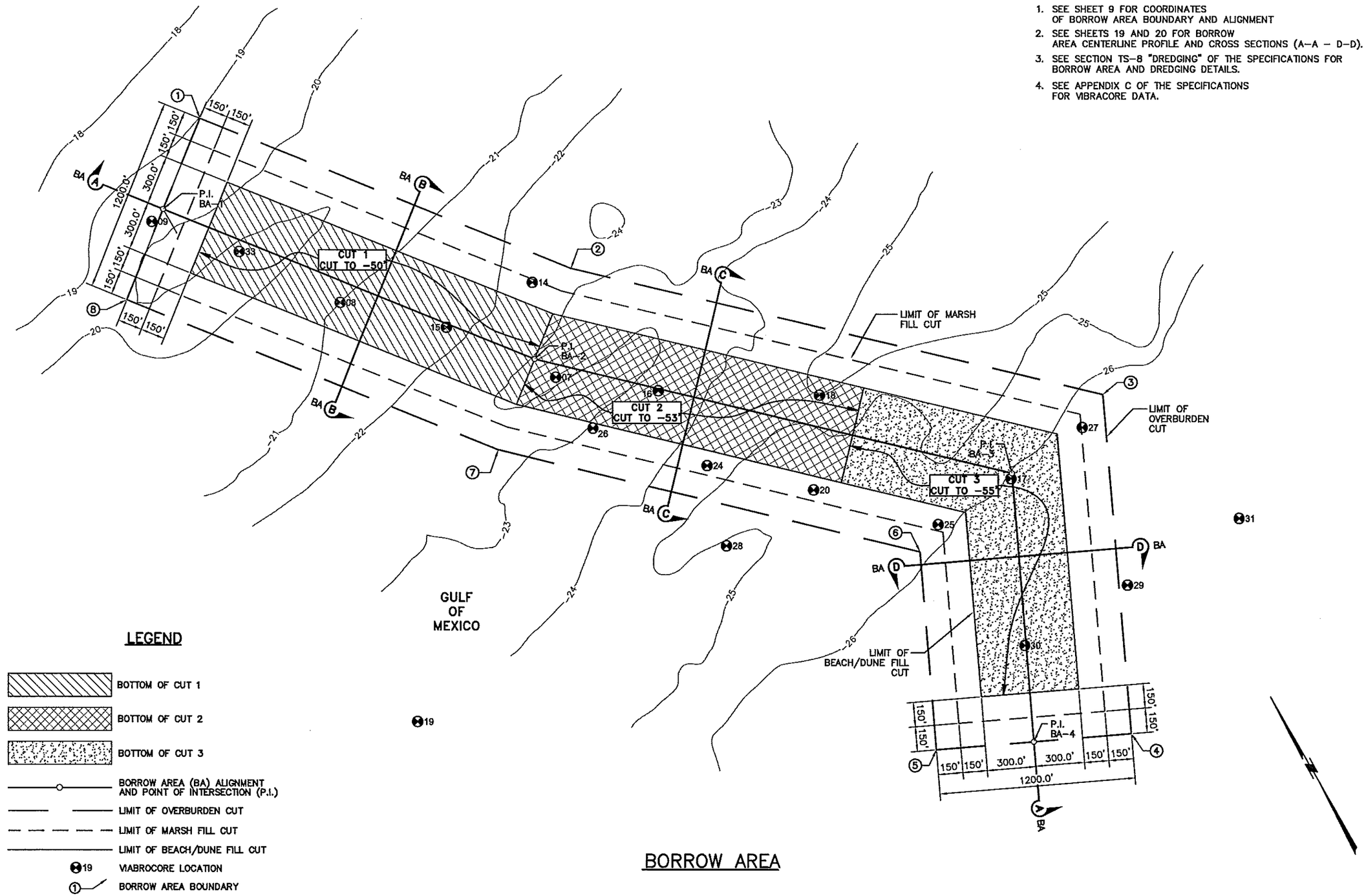

BORROW AREA

SHEET: 17

REV.	DATE	BY	DESCRIPTION

DATE: OCT. 2007 | SHEET: 17 OF 29
DESIGNED: T.M.A. | DRAWN: R.P.G./J.S.D.
CHECKED: T.M.A. | SCALE: AS NOTED
STATE PROJECT NUMBER: BA-35
FEDERAL PROJECT NUMBER: BA-35
APPROVED BY: R.J.J.

LOUISIANA DEPARTMENT OF NATURAL RESOURCES
PASS CHALAND TO GRAND BAYOU PASS BARRIER SHORELINE RESTORATION (BA-35)
BORROW AREA LAYOUT

SJB GROUP L.L.C.
P.O. BOX 1751 BATON ROUGE, LA. 70821
PHONE (225) 709-3400 FAX (225) 709-3398

COASTAL ENGINEERING CONSULTANTS INC.
PH: (239) 643-2324 FAX: (239) 643-1143
3106 SOUTH HORSESHOE DRIVE NAPLES, FLORIDA 34104

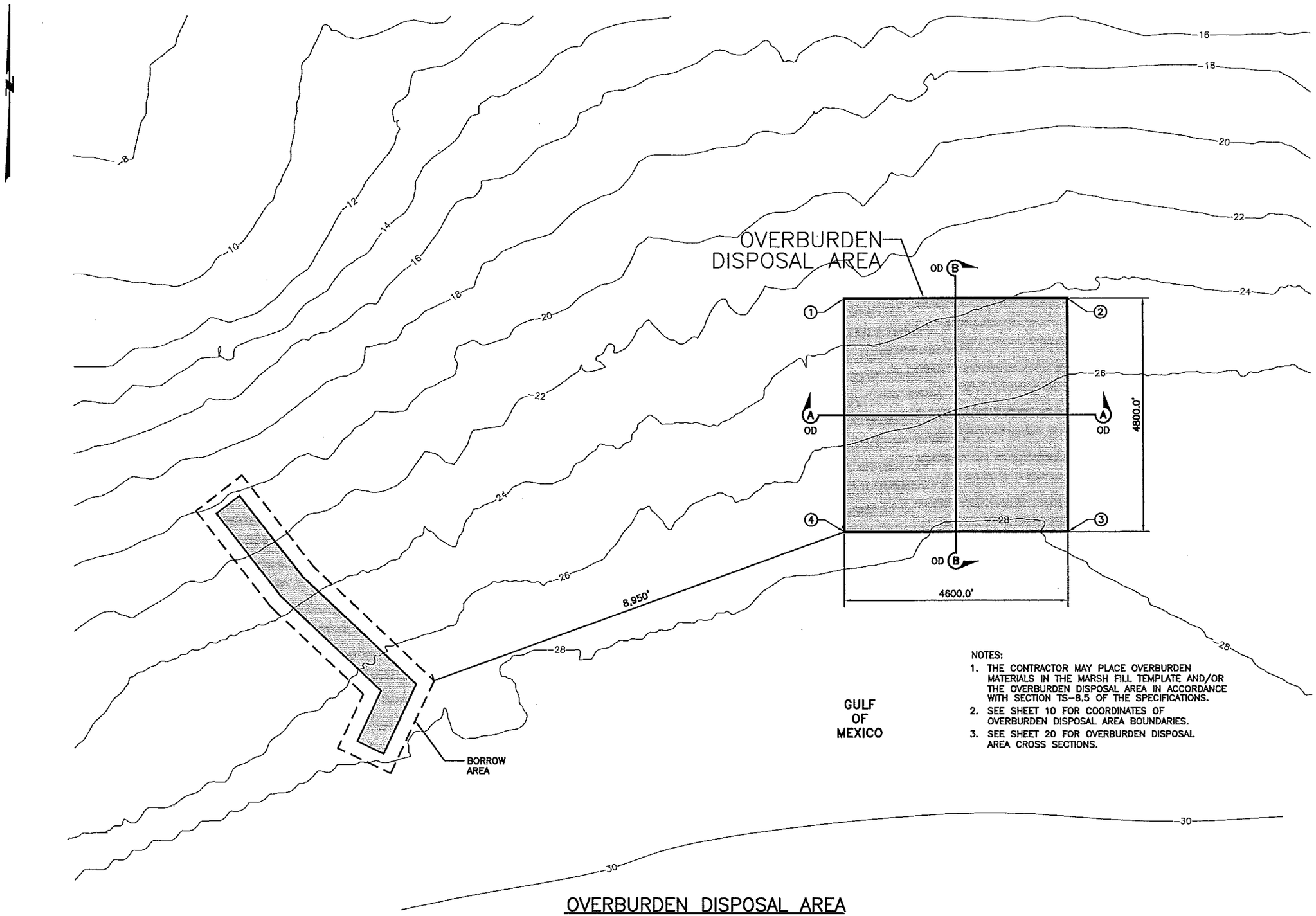

NOTES:

1. THE CONTRACTOR MAY PLACE OVERBURDEN MATERIALS IN THE MARSH FILL TEMPLATE AND/OR THE OVERBURDEN DISPOSAL AREA IN ACCORDANCE WITH SECTION TS-8.5 OF THE SPECIFICATIONS.
2. SEE SHEET 10 FOR COORDINATES OF OVERBURDEN DISPOSAL AREA BOUNDARIES.
3. SEE SHEET 20 FOR OVERBURDEN DISPOSAL AREA CROSS SECTIONS.

OVERBURDEN DISPOSAL AREA

1000' 500' 0' 1000' 2000'

SHEET: 18

REV.	DATE	BY	DESCRIPTION

DATE: OCT. 2007 | SHEET: 18 OF 29
DESIGNED: T.M.A. | DRAWN: R.P.G./J.S.D.
CHECKED: M.T.P. | SCALE: AS NOTED
STATE PROJECT NUMBER: BA-35
FEDERAL PROJECT NUMBER: BA-35
APPROVED BY: R.J.J.

LOUISIANA DEPARTMENT OF NATURAL RESOURCES
PASS CHALAND TO GRAND BAYOU PASS
BARRIER SHORELINE RESTORATION (BA-35)
OVERBURDEN DISPOSAL AREA

SJB GROUP LLC.
P.O. BOX 1751
BATON ROUGE, LA. 70821
PHONE (225) 769-3300
FAX (225) 769-3308

COASTAL ENGINEERING CONSULTANTS INC.
PH: (239) 643-2324
FAX: (239) 643-7143
3106 SOUTH HORSESHOE DRIVE
NAPLES, FLORIDA 34104

SCALES: HORIZONTAL: 1"=300'
VERTICAL: 1"=20'
ELEVATIONS ARE NAVD88 (GEOID99) FEET

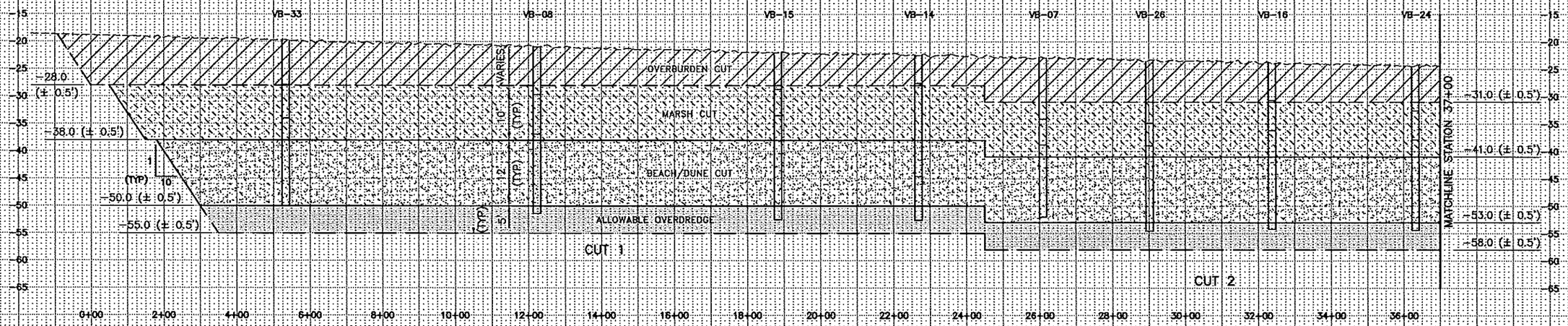

BORROW AREA CENTERLINE PROFILE

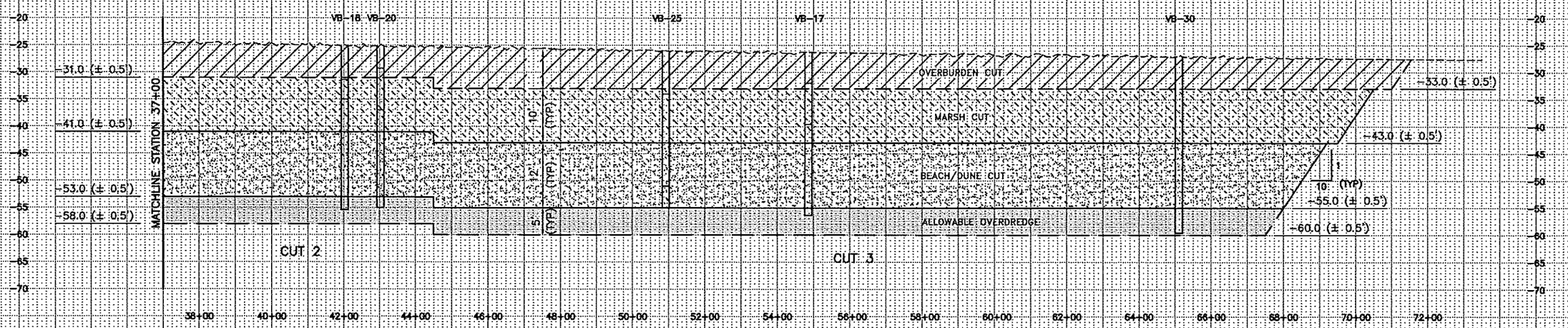

BORROW AREA CENTERLINE PROFILE

BORROW AREA CENTERLINE SECTION BA A-A

NOTES:

1. SEDIMENTOLOGIC TRANSITION FROM OVERBURDEN TO INTERBEDDED SILT, SAND, AND CLAY IS INDISTINCT
2. SEE APPENDIX C OF THE SPECIFICATIONS FOR VIBRACORE SAMPLE DATA

SOFT CLAY OVERBURDEN TO BE PLACED IN APPROVED DISPOSAL AREA

INTERBEDDED SILT, SAND, AND CLAY TO BE USED FOR MARSH CONSTRUCTION

BEACH/DUNE COMPATIBLE SEDIMENTS

ALLOWABLE OVERDREDGE, SEISMIC WORK INDICATED BEACH COMPATIBLE SEDIMENTS

VB-00 = VIBRACORE NUMBER

SHEET: 19

REV.	DATE	BY	DESCRIPTION

DATE: OCT. 2007
SHEET: 19 OF 29
DESIGNED: T.M.A.
DRAWN: R.P.G./J.S.D.
CHECKED: M.T.P.
SCALE: AS NOTED
STATE PROJECT NUMBER: BA-35
FEDERAL PROJECT NUMBER: BA-35
APPROVED BY: R.J.J.

LOUISIANA DEPARTMENT OF NATURAL RESOURCES
PASS CHALAND TO GRAND BAYOU PASS
BARRIER SHORELINE RESTORATION (BA-35)

BORROW AREA CENTERLINE PROFILE

SJB GROUP LLC.
P.O. BOX 1751
BATON ROUGE, LA. 70821
PHONE (225) 769-3400
FAX (225) 769-3580

COASTAL ENGINEERING CONSULTANTS INC.
PH: (239) 643-2324
FAX: (239) 643-4147
3106 GOLDEN HORSESHOE DRIVE
NAPLES, FLORIDA 34104

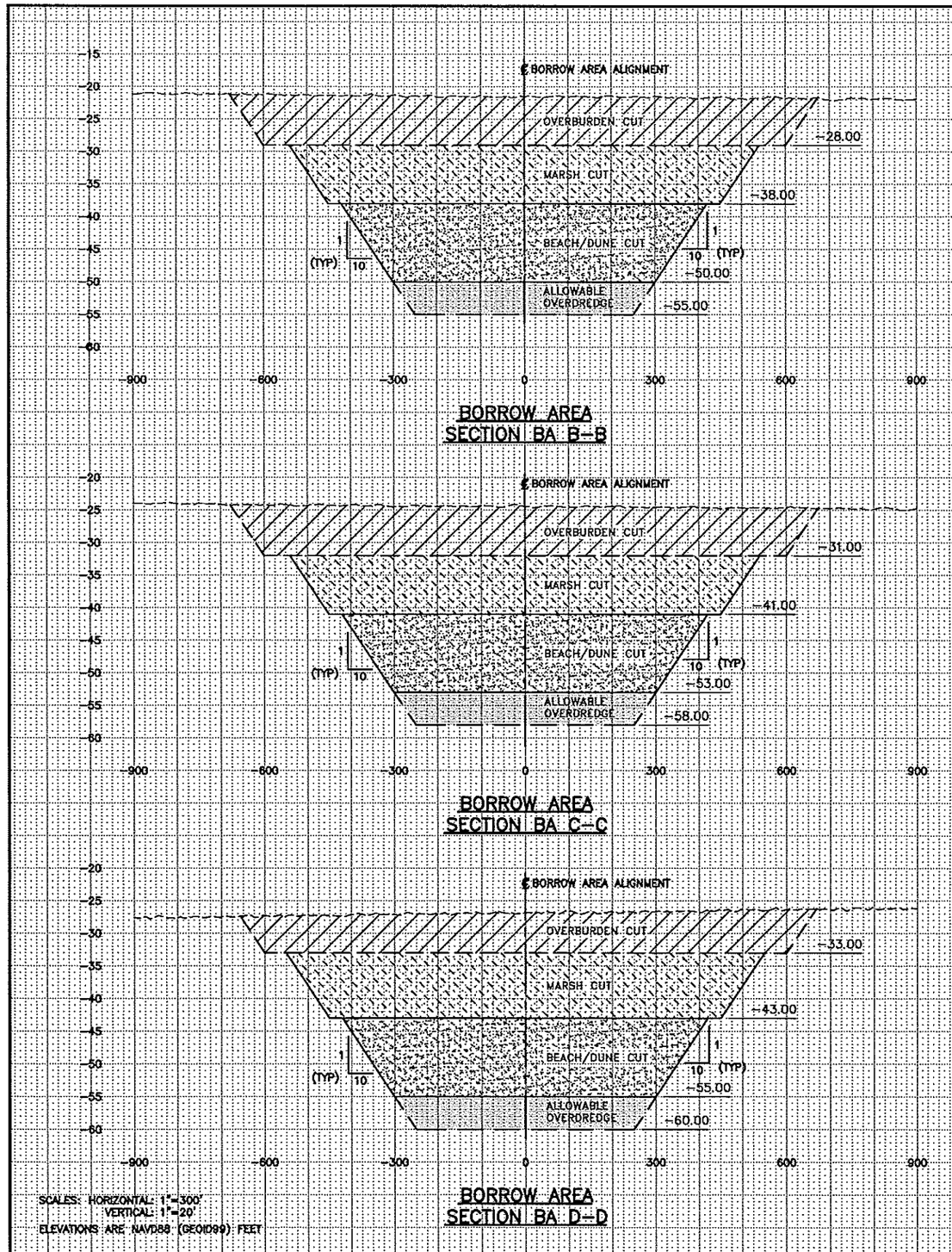

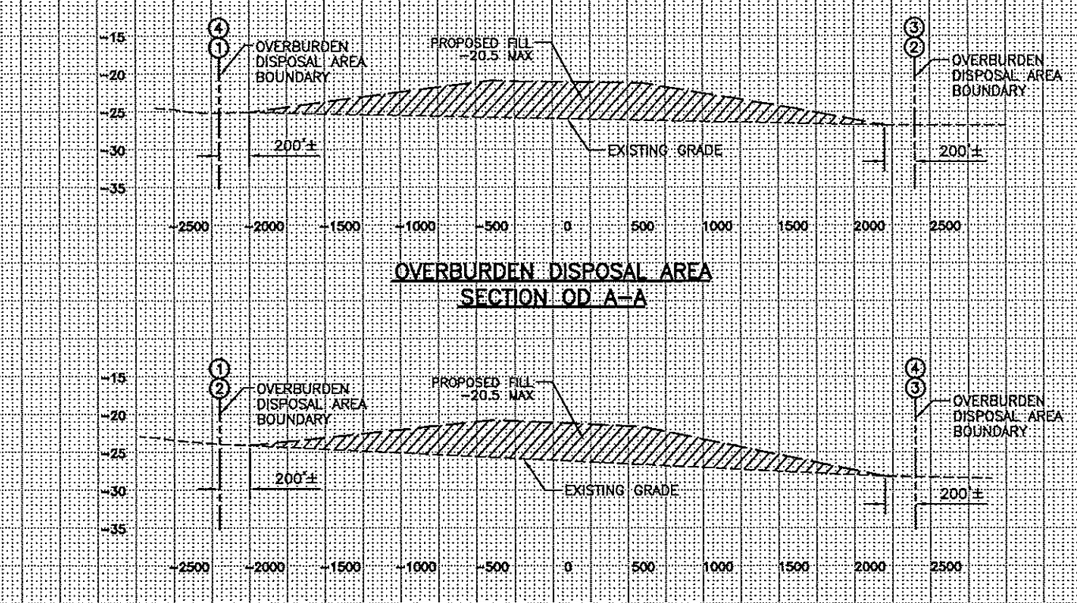

NOTES:

1. SEDIMENTOLOGIC TRANSITION FROM OVERBURDEN TO INTERBEDDED SILT, SAND, AND CLAY IS INDISTINCT
2. SEE APPENDIX C OF THE SPECIFICATIONS FOR VIBRACORE SAMPLE DATA

SOFT CLAY OVERBURDEN TO BE PLACED IN APPROVED DISPOSAL AREA

INTERBEDDED SILT, SAND, AND CLAY TO BE USED FOR MARSH CONSTRUCTION

BEACH/DUNE COMPATIBLE SEDIMENTS

ALLOWABLE OVERDREDGE SEISMIC INDICATED BEACH COMPATIBLE SEDIMENTS

SHEET: 20

REV.	DATE	BY	DESCRIPTION

DATE: OCT. 2007 | SHEET: 20 OF 29
DESIGNED: T.M.A. | DRAWN: R.P.O./J.S.D.
CHECKED: M.T.P. | SCALE: AS NOTED
STATE PROJECT NUMBER: BA-35
FEDERAL PROJECT NUMBER: BA-35
APPROVED BY: R.J.J.

LOUISIANA DEPARTMENT OF NATURAL RESOURCES

PASS CHALAND TO GRAND BAYOU PASS BARRIER SHORELINE RESTORATION (BA-35)

BORROW AREA AND OVERBURDEN DISPOSAL AREA CROSS SECTIONS

STB GROUP LLC.
P.O. BOX 1751 BATON ROUGE, LA. 70821
PHONE (225) 769-3400 FAX (225) 769-3386

COASTAL ENGINEERING CONSULTANTS INC.
PH: (239) 643-2324 FAX: (239) 643-7314
3106 SOUTH HORSESHOE DRIVE NAPLES, FLORIDA 34104

LEGEND

- BORROW AREA (BA) ALIGNMENT AND POINT OF INTERSECTION (P.I.)
- LIMIT OF OVERBURDEN CUT
- LIMIT OF MARSH FILL CUT
- LIMIT OF BEACH/DUNE FILL CUT
- SECTION TO BE SURVEYED
- BORROW AREA BOUNDARY

SECTION DESIGNATIONS:

BA–1 0+00

SECTION TYPE — SECTION NUMBER — SECTION STATION

SECTION TYPES

BA = BORROW AREA

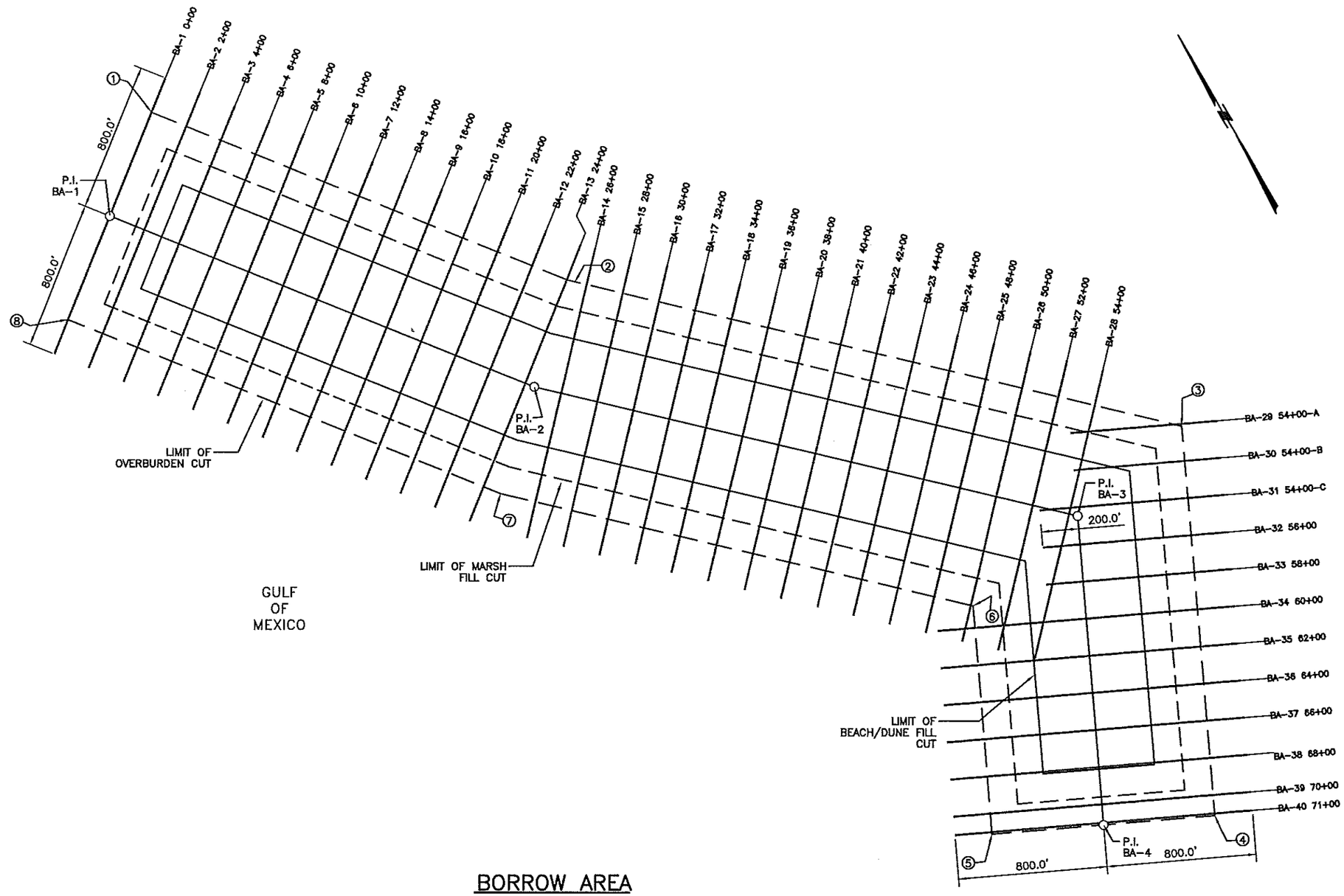

BORROW AREA SURVEY LAYOUT

NOTE: SEE SHEET 9 FOR COORDINATES OF BORROW AREA ALIGNMENT

REV.	DATE	BY	DESCRIPTION

DATE: OCT. 2007 — SHEET: 21 OF 29
DESIGNED: T.M.A. — DRAWN: R.P.G./J.S.D.
CHECKED: M.T.P. — SCALE: AS NOTED
STATE PROJECT NUMBER: BA–35
FEDERAL PROJECT NUMBER: BA–35
APPROVED BY: R.J.J.

LOUISIANA DEPARTMENT OF NATURAL RESOURCES
PASS CHALAND TO GRAND BAYOU PASS BARRIER SHORELINE RESTORATION (BA–35)
BORROW AREA SURVEY LAYOUT

STB GROUP LLC.
P.O. BOX 1751 BATON ROUGE, LA. 70821
PHONE (225) 769-3400 FAX (225) 769-3598

COASTAL ENGINEERING CONSULTANTS INC.
PH: (239) 643-2324 FAX (239) 643-2144
5106 SOUTH HORSESHOE DRIVE NAPLES, FLORIDA 34104

LEGEND

- OVERBURDEN DISPOSAL AREA
- OVERBURDEN DISPOSAL AREA BOUNDARY POINT
- SECTION TO BE SURVEYED
- ① BORROW AREA BOUNDARY

SECTION DESIGNATIONS:

OD–1 0+00

SECTION TYPE — SECTION NUMBER — SECTION STATION

SECTION TYPES

OD = OVERBURDEN DISPOSAL AREA

NOTE: SEE SHEET 10 FOR COORDINATES OF OVERBURDEN DISPOSAL AREA BOUNDARY.

GULF OF MEXICO

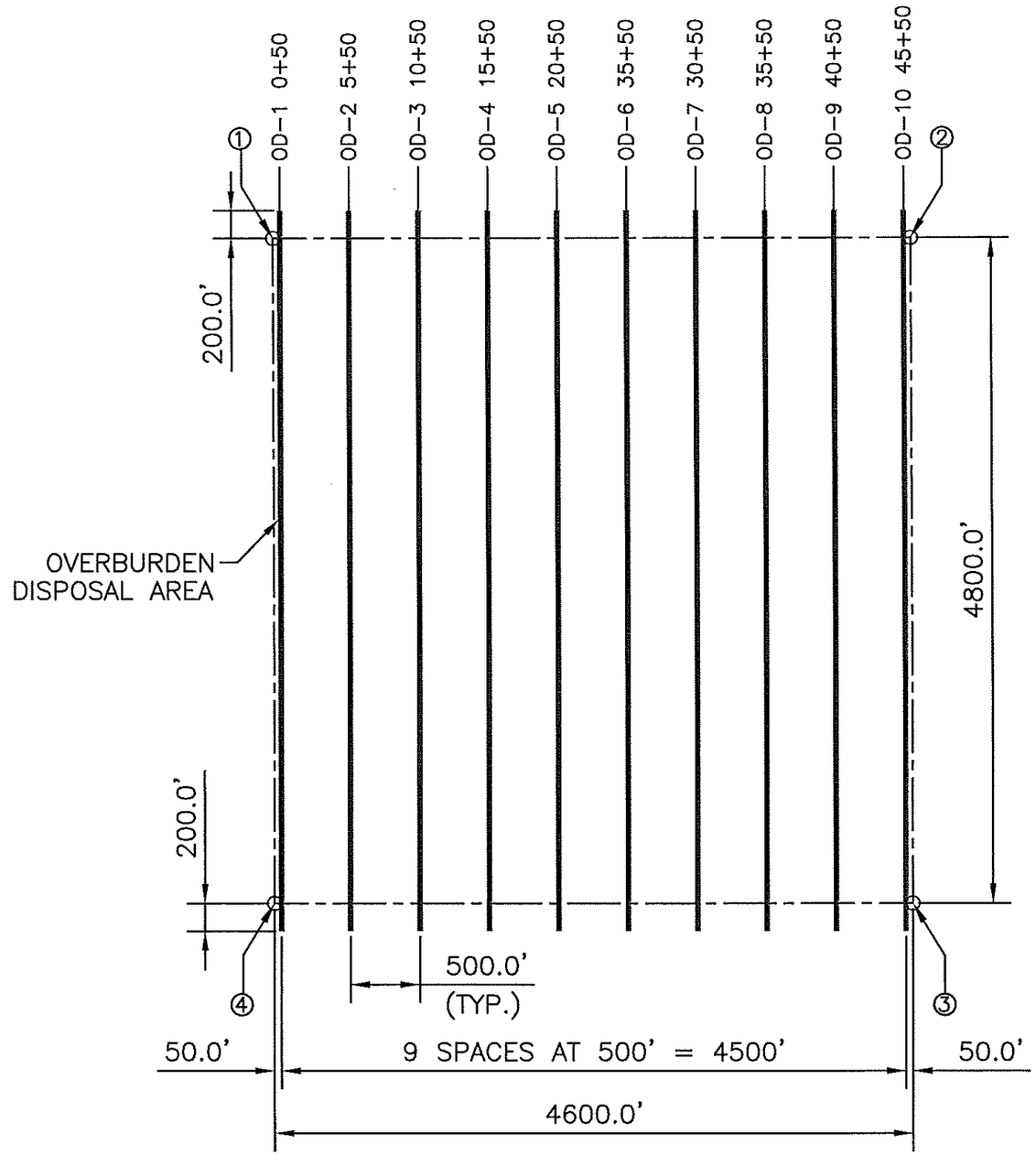

OVERBURDEN DISPOSAL AREA SURVEY LAYOUT

500' 250' 0' 500' 1000'

SHEET: 22

REV.	DATE	BY	DESCRIPTION

DATE: OCT. 2007 | SHEET: 22 OF 29
DESIGNED: T.M.A. | DRAWN: R.P.G./J.S.D.
CHECKED: M.T.P. | SCALE: AS NOTED
STATE PROJECT NUMBER: BA–35
FEDERAL PROJECT NUMBER: BA–35
APPROVED BY: R.J.J.

LOUISIANA DEPARTMENT OF NATURAL RESOURCES
PASS CHALAND TO GRAND BAYOU PASS BARRIER SHORELINE RESTORATION (BA–35)
OVERBURDEN DISPOSAL AREA SURVEY LAYOUT

SJB GROUP LLC.
P.O. BOX 1751 BATON ROUGE, LA. 70821
PHONE (225) 769–3400 FAX (225) 769–3580

COASTAL ENGINEERING CONSULTANTS INC.
PH: (239) 643–2324 FAX: (239) 643–1143
3106 SOUTH HORSESHOE DRIVE NAPLES, FLORIDA 34104

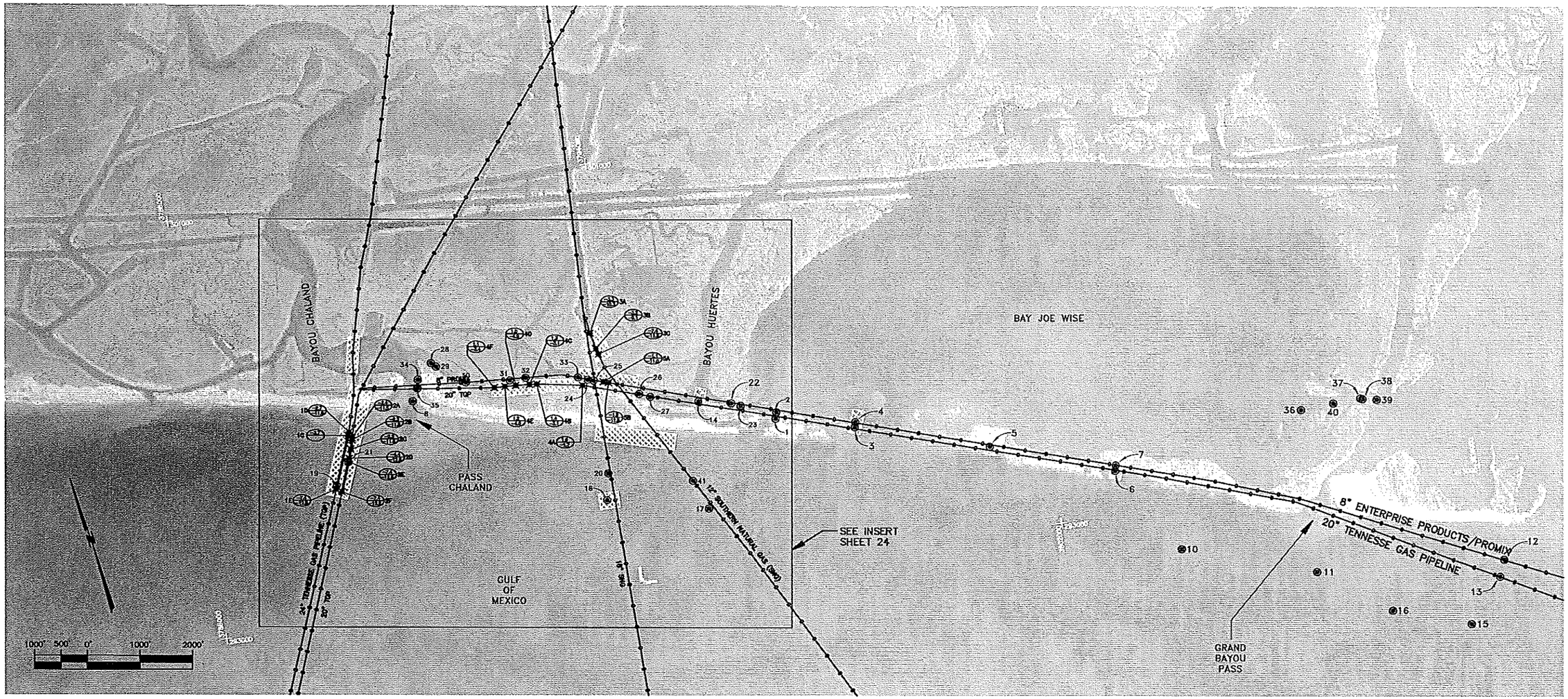

LEGEND

3787000 / 298000 — GRID TICK AND STATE PLANE COORDINATES, NORTH AMERICAN DATUM, 1983, LOUISIANA SOUTH ZONE

JET PROBE HIT

2F (-7.4 / 12.8) — JET PROBE ELEVATION DATA (ELEVATIONS IN FEET NAVD88 (GEOID99))

10 — MAGNETOMETER HITS

ASSUMED PIPELINE LOCATIONS

PIPELINE SEARCH AREAS

IDENTIFIED PIPELINE LOCATIONS

NOTES:

1. PIPELINE DEPTHS AND ALIGNMENTS ARE TO BE MARKED IN THE FIELD BY THE CONTRACTOR AND VERIFIED BY AUTHORIZED PERSONNEL FROM THE PIPELINE COMPANY.
2. PIPELINE AND WELL HEAD DATA TAKEN FROM USGS NATIONAL WETLAND RESEARCH CENTER, MAP ID: USGS_NWRC_2004_04_0150
3. SEE APPENDIX B OF THE SPECIFICATIONS FOR MAGNETOMETER SURVEY DATA
4. SEE GP-28 "UTILITIES AND IMPROVEMENTS" OF THE SPECIFICATIONS FOR COORDINATION REQUIREMENTS WITH PIPELINE COMAPNIES

SHEET: 23

REV.	DATE	BY	DESCRIPTION

DATE: OCT. 2007 | SHEET: 23 OF 29
DESIGNED: T.M.A. | DRAWN: R.P.G./J.S.D.
CHECKED: M.T.P. | SCALE: AS NOTED
STATE PROJECT NUMBER: BA-35
FEDERAL PROJECT NUMBER: BA-35
APPROVED BY: R.J.J.

LOUISIANA DEPARTMENT OF NATURAL RESOURCES

PASS CHALAND TO GRAND BAYOU PASS BARRIER SHORELINE RESTORATION (BA-35)

PIPELINE SEARCH AREA

STB GROUP LLC.
P.O. BOX 1721 BATON ROUGE, LA. 70821
PHONE (225) 769-3400 FAX (225) 769-3596

COASTAL ENGINEERING CONSULTANTS INC.
PH: (239) 643-2324
FAX: (239) 643-1143
3106 SOUTH HORSESHOE DRIVE
NAPLES, FLORIDA 34104

LEGEND

GRID TICK AND STATE PLANE COORDINATES, NORTH AMERICAN DATUM, 1983, LOUISIANA SOUTH ZONE (787000, 298000)

JET PROBE HIT

JET PROBE ELEVATION DATA (ELEVATIONS IN FEET NAVD88 (GEOID99)) — DESIGNATION: 2F; ELEVATION OF NATURAL GRADE: -7.4; ELEVATION OF CROWN OF PIPE: 12.8

MAGNETOMETER HITS (10)

ASSUMED PIPELINE LOCATIONS

PIPELINE SEARCH AREAS

IDENTIFIED PIPELINE LOCATIONS

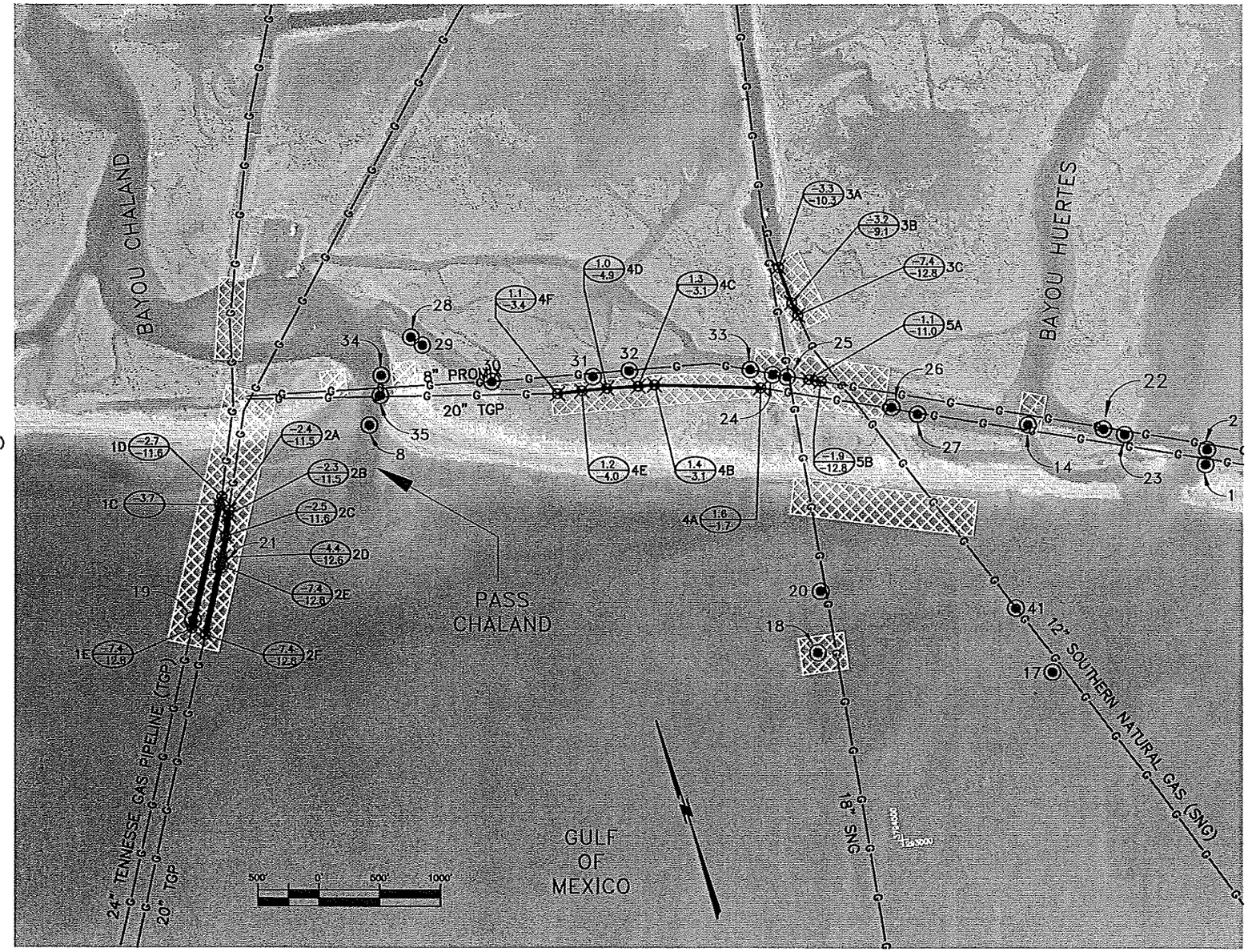

NOTES:
1. SEE SHEET 10 FOR COORDINATES OF JET PROBE HITS.
2. PIPELINE DEPTHS AND ALIGNMENTS ARE TO BE MARKED IN THE FIELD BY THE CONTRATOR AND VERIFIED BY AUTHORIZED PERSONNEL FROM THE PIPELINE COMPANY.
3. SEE SECTIONS GP-27, GP-28, AND TS-6.13 OF THE SPECIFICATIONS FOR PIPELINE LOCATION GUIDANCE.
4. PIPELINE AND WELL HEAD DATA TAKEN FROM USGS NATIONAL WETLAND RESEARCH CENTER, MAP ID: USGS_NWRC_2004_04_0150

SHEET: 24

REV.	DATE	BY	DESCRIPTION

DATE: OCT. 2007 | SHEET: 24 OF 29
DESIGNED: T.M.A. | DRAWN: R.P.G./J.S.D.
CHECKED: M.T.P. | SCALE: AS NOTED
STATE PROJECT NUMBER: BA-35
FEDERAL PROJECT NUMBER: BA-35
APPROVED BY: R.J.J.

LOUISIANA DEPARTMENT OF NATURAL RESOURCES
PASS CHALAND TO GRAND BAYOU PASS BARRIER SHORELINE RESTORATION (BA-35)
PIPELINE SEARCH AREA (INSET AREA)

STB GROUP L.L.C.
P.O. BOX 1721 BATON ROUGE, LA. 70821
PHONE (225) 769-3400 FAX (225) 769-3596

COASTAL ENGINEERING CONSULTANTS INC.
PH: (239) 643-2324 FAX: (239) 643-1143
3106 SOUTH HORSESHOE DRIVE NAPLES, FLORIDA 34104

SCALES: HORIZONTAL: 1"=300'
VERTICAL: 1"=20'
ELEVATIONS ARE NAVD88 (GEOID99) FEET

NOTE: PIPELINE DEPTHS AND ALIGNMENTS ARE TO BE MARKED IN IN THE FIELD BY THE CONTRACTOR AND VERIFIED BY AUTHORIZED PERSONNEL FROM THE PIPELINE COMPANY.

TIDAL DATUM REFERENCED TO NOS STATION 8761724 "GRAND ISLE, EAST POINT, LA"
TIDAL EPOCH 1960 – 1978 (5-YEAR SPECIAL UPDATE
ADJUSTED FOR NAVD88 (GEOID99)

MEASURED ELEVATION OF BENCHMARK REFERENCED TO GEOID99
ON APRIL 18, 2007 = 6.444 FEET
MEASURED ELEVATION OF BENCHMARK REFERENCED TO GEOID03(05)
ON APRIL 18, 2007 = 6.066 FEET

BENCH MARK STATION NAME: "RONQUILLE 2"
LOCATION: ADJUSTED NAD 83 GEODETIC POSITION
LAT. 29°18'25.65099"N
LONG. 89°43'29.14084"W
ADJUSTED NAD 1983 DATUM LSZ (1702) FEET
N= 297,126.23
E= 3,793,517.87
GEOID03(05): HEIGHT = -24.020 METERS
ELLIPSOID HEIGHT = -22.172 METERS

SHEET: 25

REV.	DATE	BY	DESCRIPTION

DATE: OCT. 2007
SHEET: 25 OF 29
DESIGNED: T.M.A.
DRAWN: R.P.G./L.S.D.
CHECKED: M.T.P.
SCALE: AS NOTED
STATE PROJECT NUMBER: BA-35
FEDERAL PROJECT NUMBER: BA-35
APPROVED BY: R.J.J.

LOUISIANA DEPARTMENT OF NATURAL RESOURCES

PASS CHALAND TO GRAND BAYOU PASS
BARRIER SHORELINE RESTORATION (BA-35)

FILL AREA
CROSS SECTIONS

SJB GROUP
L.L.C.
P.O. Box 1751
BATON ROUGE, LA. 70821
PHONE (225) 769-3400
FAX (225) 769-3598

COASTAL ENGINEERING CONSULTANTS INC.
PH. (239) 643-2324
FAX. (239) 643-1143
3106 SOUTH HORSESHOE DRIVE
NAPLES, FLORIDA 34104

SCALES: HORIZONTAL: 1"=300'
VERTICAL: 1"=20'
ELEVATIONS ARE NAVD88 (GEOID99) FEET

NOTE: PIPELINE DEPTHS AND ALIGNMENTS ARE TO BE MARKED IN THE FIELD BY THE CONTRACTOR AND VERIFIED BY AUTHORIZED PERSONNEL FROM THE PIPELINE COMPANY.

TIDAL DATUM REFERENCED TO NOS STATION 8761724 "GRAND ISLE, EAST POINT, LA"
TIDAL EPOCH 1960 – 1978 (5-YEAR SPECIAL UPDATE)
ADJUSTED FOR NAVD88 (GEOID99)

MEASURED ELEVATION OF BENCHMARK REFERENCED TO GEOID99
ON APRIL 18, 2007 = 6.444 FEET
MEASURED ELEVATION OF BENCHMARK REFERENCED TO GEOID03(05)
ON APRIL 18, 2007 = 6.066 FEET

BENCH MARK STATION NAME: "RONQUILLE 2"
LOCATION: ADJUSTED NAD 83 GEODETIC POSITION
LAT. 29 18'25.65099"N
LONG. 89 43'29.14084"W
ADJUSTED NAD 1983 DATUM LSZ (1702) FEET
N= 297,126.23
E= 3,793,517.87
GEOID03(05) HEIGHT = -24.020 METERS
ELLIPSOID HEIGHT = -22.172 METERS

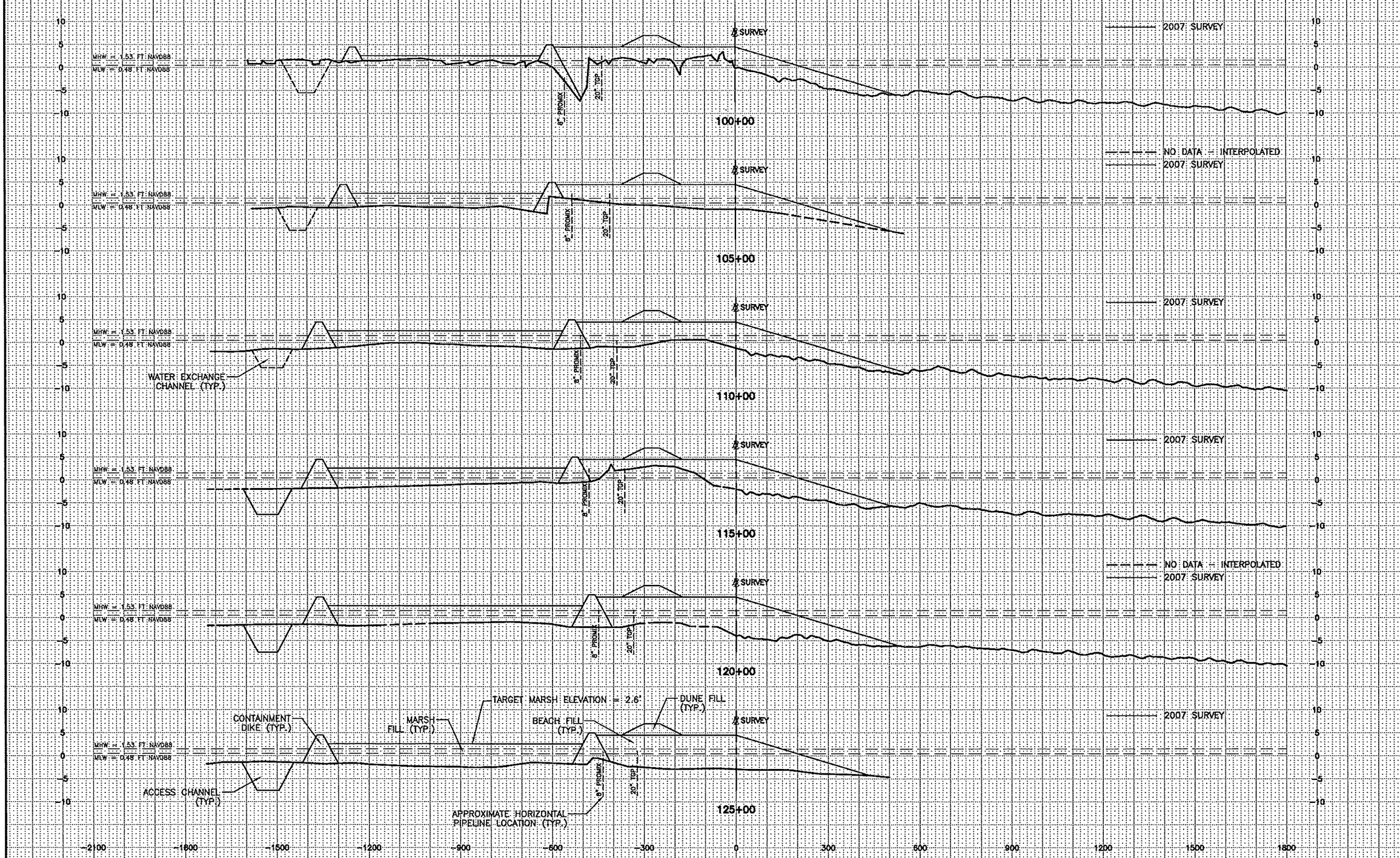

SHEET: 26

REV.	DATE	BY	DESCRIPTION

DATE: OCT. 2007
SHEET: 28 OF 29
DESIGNED: T.M.A.
DRAWN: R.P.G./J.S.D.
CHECKED: M.T.P.
SCALE: AS NOTED
STATE PROJECT NUMBER: BA-35
FEDERAL PROJECT NUMBER: BA-35
APPROVED BY: R.J.J.

LOUISIANA DEPARTMENT OF NATURAL RESOURCES

PASS CHALAND TO GRAND BAYOU PASS
BARRIER SHORELINE RESTORATION (BA-35)

FILL AREA
CROSS SECTIONS

SJB GROUP LLC.
P.O. BOX 1751
BATON ROUGE, LA. 70821
PHONE (225) 769-3400
FAX (225) 769-3399

COASTAL ENGINEERING CONSULTANTS INC.
PH: (239) 643-2324
FAX: (239) 643-1143
3106 SOUTH HORSESHOE DRIVE
NAPLES, FLORIDA 34104

SCALES: HORIZONTAL: 1"=300'
VERTICAL: 1"=20'
ELEVATIONS ARE NAVD88 (GEOID99) FEET

NOTE: PIPELINE DEPTHS AND ALIGNMENTS ARE TO BE MARKED IN THE FIELD BY THE CONTRACTOR AND VERIFIED BY AUTHORIZED PERSONNEL FROM THE PIPELINE COMPANY.

TIDAL DATUM REFERENCED TO NOS STATION 8761724 "GRAND ISLE, EAST POINT, LA"
TIDAL EPOCH 1960 – 1976 (5-YEAR SPECIAL UPDATE)
ADJUSTED FOR NAVD88 (GEOID99)

MEASURED ELEVATION OF BENCHMARK REFERENCED TO GEOID99
ON APRIL 18, 2007 = 6.444 FEET
MEASURED ELEVATION OF BENCHMARK REFERENCED TO GEOID03(05)
ON APRIL 18, 2007 = 6.066 FEET

BENCH MARK STATION NAME: "RONQUILLE 2"
LOCATION: ADJUSTED NAD 83 GEODETIC POSITION
LAT. 29 18'25.65099"N
LONG. 89 43'29.14084"W
ADJUSTED NAD 1983 DATUM LSZ (1702) FEET
N= 297,126.23
E= 3,793,517.87
GEOID03(05) HEIGHT = -24.020 METERS
ELLIPSOID HEIGHT = -22.172 METERS

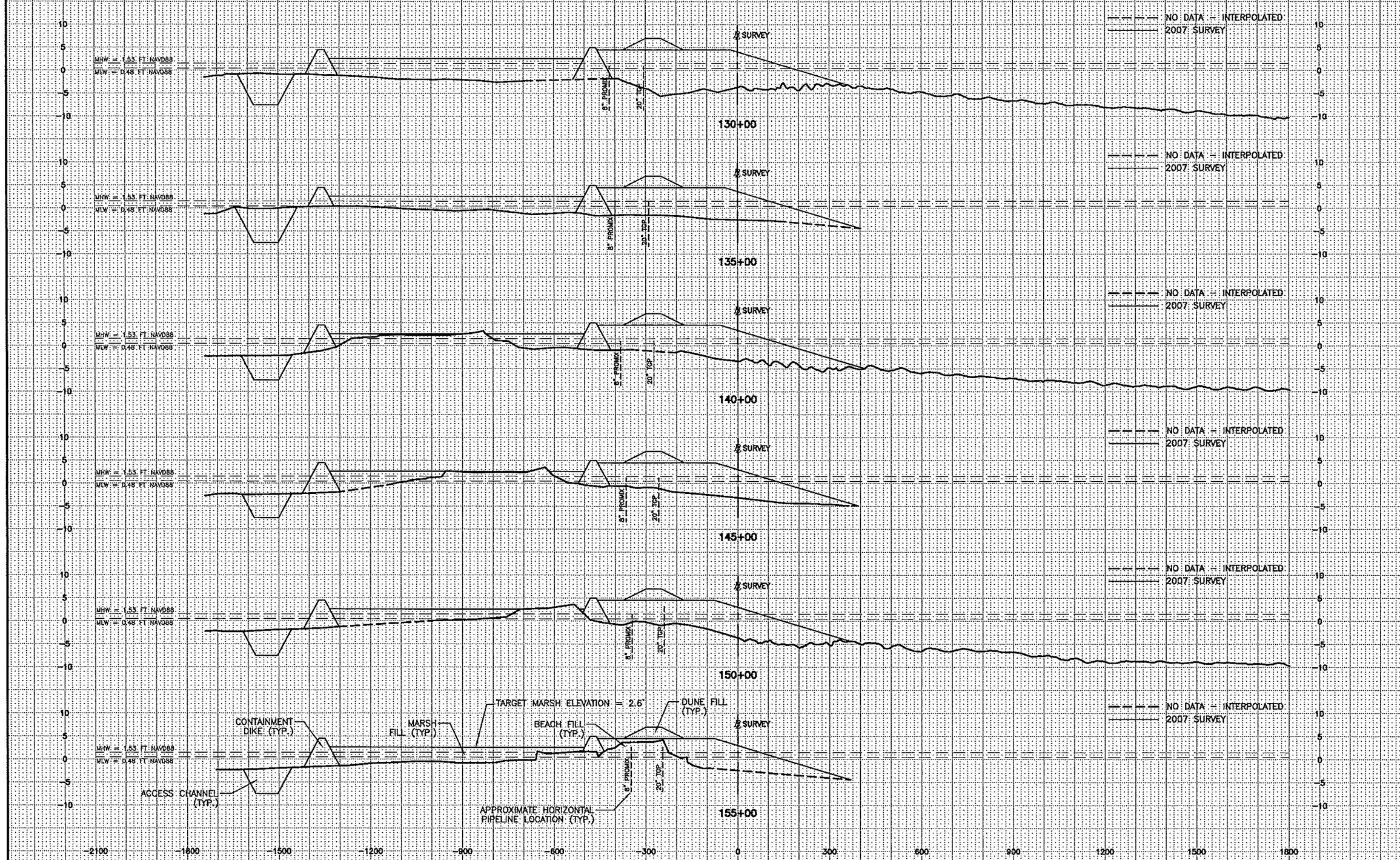

SHEET: 27

REV.	DATE	BY	DESCRIPTION

DATE: OCT. 2007
DESIGNED: T.M.A.
CHECKED: M.T.P.
STATE PROJECT NUMBER: BA-35
FEDERAL PROJECT NUMBER: BA-35
APPROVED BY: R.J.J.
SHEET: 27 OF 29
DRAWN: R.P.G./J.S.D.
SCALE: AS NOTED

LOUISIANA DEPARTMENT OF NATURAL RESOURCES

PASS CHALAND TO GRAND BAYOU PASS BARRIER SHORELINE RESTORATION (BA-35)

FILL AREA CROSS SECTIONS

SJB GROUP LLC.
P.O. BOX 1751
BATON ROUGE, LA. 70821
PHONE (225) 709-3400
FAX (225) 709-3399

COASTAL ENGINEERING CONSULTANTS INC.
PH: (239) 643-2324
FAX: (239) 643-4143
3106 PINE RIDGE ROAD
NAPLES, FLORIDA 34104

SCALES: HORIZONTAL: 1"=300'
VERTICAL: 1"=20'
ELEVATIONS ARE NAVD88 (GEOID99) FEET

NOTE: PIPELINE DEPTHS AND ALIGNMENTS ARE TO BE MARKED IN THE FIELD BY THE CONTRACTOR AND VERIFIED BY AUTHORIZED PERSONNEL FROM THE PIPELINE COMPANY.

TIDAL DATUM REFERENCED TO NOS STATION 8761724 "GRAND ISLE, EAST POINT, LA"
TIDAL EPOCH 1960 – 1978 (5-YEAR SPECIAL UPDATE)
ADJUSTED FOR NAVD88 (GEOID99)

MEASURED ELEVATION OF BENCHMARK REFERENCED TO GEOID99
ON APRIL 18, 2007 = 6.444 FEET
MEASURED ELEVATION OF BENCHMARK REFERENCED TO GEOID03(05)
ON APRIL 18, 2007 = 6.066 FEET

BENCH MARK STATION NAME: "RONQUILLE 2"
LOCATION: ADJUSTED NAD 83 GEODETIC POSITION
LAT. 29°18'25.65099"N
LONG. 89°43'29.14084"W
ADJUSTED NAD 1983 DATUM LSZ (1702) FEET
N= 297,126.23
E= 3,793,517.87
GEOID03(05) HEIGHT = -24.020 METERS
ELLIPSOID HEIGHT = -22.172 METERS

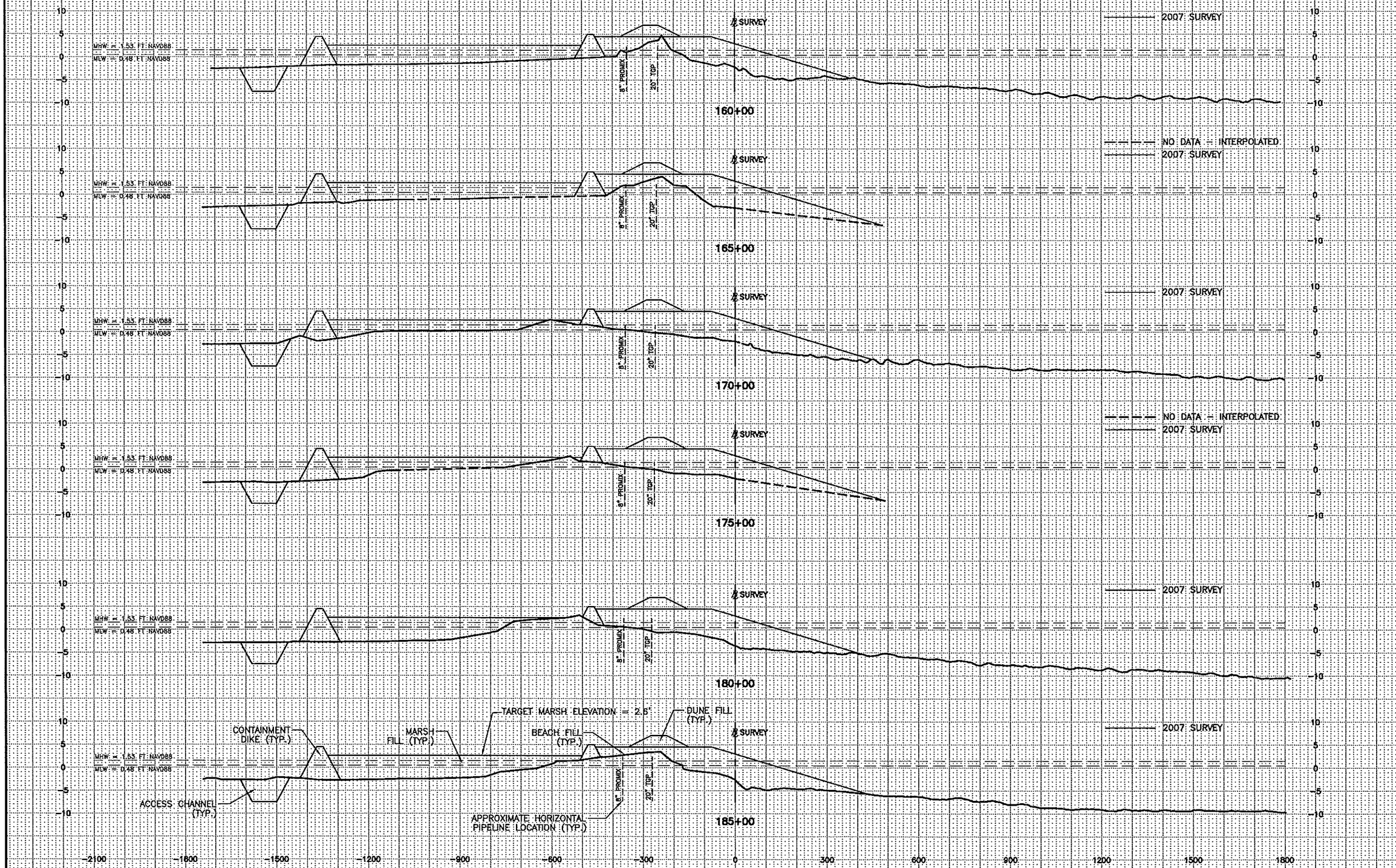

SHEET: 28

REV.	DATE	BY	DESCRIPTION

DATE: OCT. 2007 | SHEET: 28 OF 29
DESIGNED: T.M.A. | DRAWN: R.F.G./L.S.D.
CHECKED: M.T.P. | SCALE: AS NOTED
STATE PROJECT NUMBER: BA-35
FEDERAL PROJECT NUMBER: BA-35
APPROVED BY: R.J.J.

LOUISIANA DEPARTMENT OF NATURAL RESOURCES

PASS CHALAND TO GRAND BAYOU PASS
BARRIER SHORELINE RESTORATION (BA-35)

FILL AREA
CROSS SECTIONS

STB GROUP LLC.
P.O. BOX 1731
BATON ROUGE, LA. 70821
PHONE (225) 769-3400
FAX (225) 769-3598

COASTAL ENGINEERING CONSULTANTS INC.
PH: (239) 643-2324
FAX: (239) 643-4143
1420 PINE RIDGE ROAD SOUTH
NAPLES, FLORIDA 34104

SCALES: HORIZONTAL: 1"=300'
VERTICAL: 1"=20'
ELEVATIONS ARE NAVD88 (GEOID99) FEET

NOTE: PIPELINE DEPTHS AND ALIGNMENTS ARE TO BE MARKED IN THE FIELD BY THE CONTRACTOR AND VERIFIED BY AUTHORIZED PERSONNEL FROM THE PIPELINE COMPANY.

TIDAL DATUM REFERENCED TO NOS STATION 8761724 "GRAND ISLE, EAST POINT, LA"
TIDAL EPOCH 1960 – 1978 (5-YEAR SPECIAL UPDATE)
ADJUSTED FOR NAVD88 (GEOID99)

MEASURED ELEVATION OF BENCHMARK REFERENCED TO GEOID99
ON APRIL 18, 2007 = 6.444 FEET
MEASURED ELEVATION OF BENCHMARK REFERENCED TO GEOID03(05)
ON APRIL 18, 2007 = 6.086 FEET

BENCH MARK STATION NAME: "RONQUILLE 2"
LOCATION: ADJUSTED NAD 83 GEODETIC POSITION
LAT. 29 18'25.65099"N
LONG. 89 43'29.14084"W
ADJUSTED NAD 1983 DATUM US2 (1702) FEET
N= 297,126.23
E= 3,793,517.87
GEOID03(05) HEIGHT = -24.020 METERS
ELLIPSOID HEIGHT = -22.172 METERS

SHEET: 29

REV.	DATE	BY	DESCRIPTION

SHEET: 29 OF 29
DRAWN: R.P.G./J.S.D.
SCALE: AS NOTED
STATE PROJECT NUMBER: BA-35
FEDERAL PROJECT NUMBER: BA-35
DATE: OCT. 2007
DESIGNED: T.M.A.
CHECKED: M.T.P.
APPROVED BY: R.J.J.

LOUISIANA DEPARTMENT OF NATURAL RESOURCES

PASS CHALAND TO GRAND BAYOU PASS BARRIER SHORELINE RESTORATION (BA-35)

FILL AREA CROSS SECTIONS

SJB GROUP L.L.C.
P.O. BOX 1751
BATON ROUGE, LA. 70821
PHONE (225) 769-3400
FAX (225) 769-3399

COASTAL ENGINEERING CONSULTANTS INC.
PH: (239) 643-2324
FAX: (239) 643-1143
3106 SOUTH HORSESHOE DRIVE
NAPLES, FLORIDA 34104