STATE OF LOUISIANA
COASTAL PROTECTION AND RESTORATION AUTHORITY

ISLAND ROAD MARSH CREATION AND NOURISHMENT PROJECT

TE-0117
TERREBONNE PARISH

INDEX TO SHEETS

SHEET NO.	DESCRIPTION
1	TITLE SHEET
2	GENERAL NOTES
3	PROJECT LAYOUT AND ACCESS CORRIDORS
4	NORTHERN ACCESS CORRIDOR PLAN VIEW
5	MARSH CREATION AREA AND CONVEYANCE CORRIDOR PLAN VIEW
6	CONVEYANCE CORRIDOR PLAN VIEW
7	MARSH CREATION BORROW AREA PLAN VIEW
8-9	SOUTHERN ACCESS CORRIDOR PLAN VIEW
10-13	TYPICAL SECTIONS
14-17	PIPELINE CROSSINGS
18-19	DESIGN SURVEY AND DATA COLLECTION LAYOUT
20	MAGNETOMETER DATA
21	MARSH CREATION AREA CONSTRUCTION SURVEY AND SETTLEMENT PLATE LAYOUT
22	BORROW AREA CONSTRUCTION SURVEY LAYOUT
23	GRADE STAKE DETAILS
24	SETTLEMENT PLATE DETAILS
25	INSTRUMENTED SETTLEMENT PLATE DETAILS

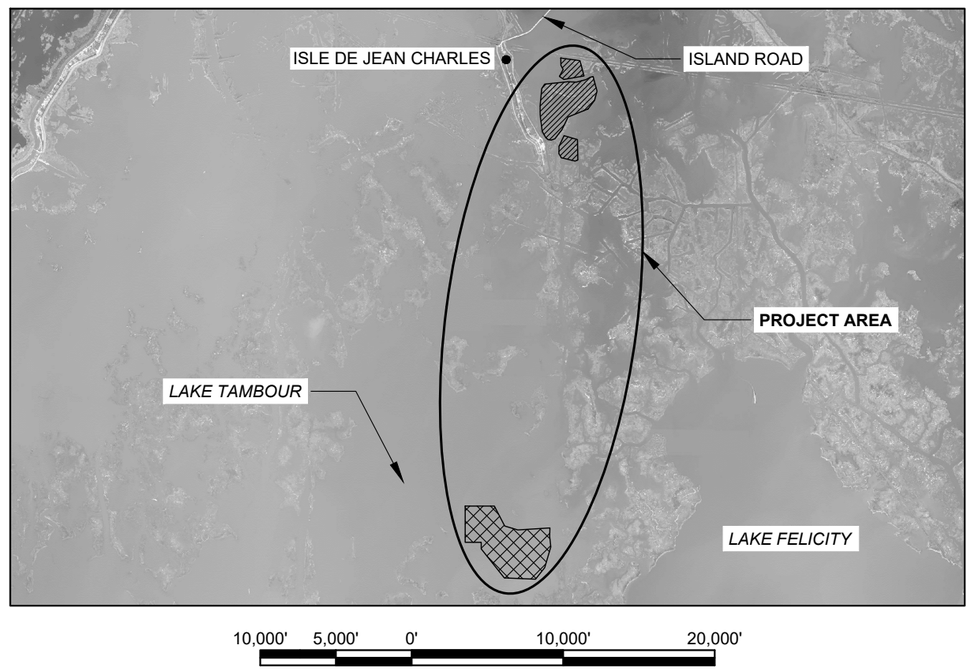

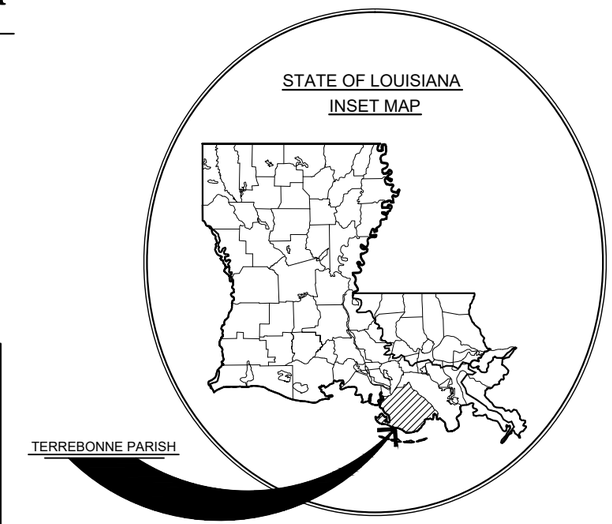

PRELIMINARY

DOCUMENTS ARE NOT TO BE USED FOR CONSTRUCTION, BIDDING, RECORDATION, CONVEYANCE, SALES, OR AS THE BASIS FOR THE ISSUANCE OF A PERMIT.

LICENSURE CLASSIFICATION REQUIREMENTS
MAJOR CLASSIFICATION: HEAVY CONSTRUCTION OR DREDGING

REV.	DATE	DESCRIPTION	BY

COASTAL PROTECTION AND RESTORATION AUTHORITY
150 TERRACE AVENUE
BATON ROUGE, LOUISIANA 70802

TITLE SHEET

DESIGNED BY: JACQUES BOUDREAUX, P.E. - 0041685
APPROVED BY: DAIN GILLEN, P.E.

ISLAND ROAD MARSH CREATION AND NOURISHMENT PROJECT

STATE PROJECT NUMBER: TE-0117
DRAWN BY: SHANE FAUST

DATE: SEPTEMBER 2021

GENERAL NOTES:

1. THE EQUIPMENT ACCESS TO THE PROJECT SITE SHALL BE THROUGH NAVIGABLE WATERWAYS AND SHALL NOT IMPACT EXISTING WATER BOTTOMS OR WETLANDS UNLESS OTHERWISE NOTED. NO PROPWASHING OR ACCESS DREDGING WILL BE ALLOWED.

2. PLANS AND SPECIFICATIONS ARE COMPLEMENTARY; WHAT IS REQUIRED BY ONE IS BINDING AS IF REQUIRED BY ALL. CLARIFICATIONS AND INTERPRETATIONS OF, OR NOTIFICATIONS OF MINOR VARIATIONS AND DEVIATIONS IN THE CONTRACT DOCUMENTS, WILL BE ISSUED BY THE ENGINEER.

3. THE CONTRACTOR SHALL MAINTAIN AIDS TO NAVIGATION DURING CONSTRUCTION AND HAVE ADEQUATE NAVIGATIONAL EQUIPMENT ON THE DREDGE TO AVOID DREDGING IN RESTRICTED AREAS. ANY DAMAGE TO EXISTING AIDS TO NAVIGATION SHALL BE REPAIRED BY THE CONTRACTOR TO U.S. COAST GUARD STANDARDS AT THE EXPENSE OF THE CONTRACTOR.

4. THE PROJECT FEATURES MAY BE REVISED BY THE ENGINEER THROUGHOUT THE WORK TO REFLECT CHANGES IN FIELD CONDITIONS.

5. A MAGNETOMETER SURVEY SHALL BE PERFORMED IN ANY AREAS POTENTIALLY REQUIRING EARTHWORK OR PROPOSING WATER BOTTOM DISTURBANCE PRIOR TO EXCAVATION OR DREDGING. DRAWINGS SHOWING THE TRACK LINES, COORDINATES, AMPLITUDE, SIGNATURE TYPE, AND DURATION OF ALL INFRASTRUCTURE AND ANOMALIES SHALL BE SUBMITTED TO THE ENGINEER IN THE PRECONSTRUCTION SURVEY.

6. THE CONTRACTOR IS RESPONSIBLE FOR CONTAINING THE HYDRAULICALLY DREDGED MATERIAL WITHIN THE BOUNDARIES OF THE MARSH CREATION AREAS.

7. THE BACKGROUND IMAGERY WAS TAKEN IN 2018.

9. THE PIPELINE AND UTILITY LOCATIONS SHOWN ON THE PLANS ARE APPROXIMATE. THE CONTRACTOR SHALL LOCATE AND MARK ALL PIPELINES AND UTILITIES LOCATED WITHIN 250 FT. OF THE WORK PRIOR TO BEGINNING CONSTRUCTION. THE CONTRACTOR SHALL MAINTAIN THESE MARKERS DURING CONSTRUCTION. VERIFIED PIPELINES REFERENCE THE PIPELINE LOCATION (X, Y, Z) DATA BASED ON THE DESIGN SURVEY(S).

10. THE PIPELINE INFORMATION SHOWN ON THE PLANS IS A COMPILATION OF PRIOR MAGNETOMETER SURVEYS MEETING ASCE UTILITY QUALITY LEVEL B, TOP OF PIPE PROBINGS, AND PIPELINE LOCATION RECORDS MEETING ASCE UTILITY QUALITY LEVEL D. THE PIPELINE LOCATIONS SHALL BE CONSIDERED APPROXIMATE AND CAN NOT BE CONFIRMED FOR ACCURACY AND COMPLETENESS, THEREBY REQUIRING THE CONTRACTOR TO PROVIDE AN INDEPENDENT MAGNETOMETER SURVEY PRIOR TO CONSTRUCTION, WHICH CONFIRMS LOCATIONS OF VERIFIED AND/OR UNVERIFIED PIPELINES IN THE PROJECT WORK AREAS AS PER THE SPECIFICATIONS. A VERIFIED PIPELINE SHALL MEAN A KNOWN PIPELINE.

NOTIFICATIONS:

1. THE CONTRACTOR SHALL BE RESPONSIBLE FOR NOTIFYING THE FOLLOWING PIPELINE AND UTILITY OPERATORS AT LEAST FIVE (5) WORKING DAYS IN ADVANCE OF THE WORK. CALL LOUISIANA ONE CALL AT 1-800-272-3020 5 DAYS PRIOR TO ANY EXCAVATION AND/OR DREDGING TO LOCATE ALL PIPELINES OR UTILITIES.

COLUMBIA GULF CONTACT: DEBORAH MATTHEWS PHONE: (304) 357-3171	GENESIS CONTACT: MANDY KENNEL PHONE: (713) 860-2686	GULF SOUTH CONTACT: THOMAS PORTER PHONE: (713) 599-5730	HARVEST CONTACT: TROY BROWN PHONE: (713) 289-2400
HILCORP CONTACT: ALLAN PRINGLE PHONE: (346) 237-2232	KINETICA CONTACT: KURT CHERAMIE PHONE: (985) 223-6165	KOCH CONTACT: CHRIS PALMER PHONE: (316) 828-2125	TENNESSEE GAS CONTACT: N/A PHONE: (800) 276-9927
WILLIAMS CONTACT: KATY RICH PHONE: (405) 250-7894			

2. THE CONTRACTOR SHALL NOTIFY THE LANDOWNERS LISTED BELOW AT LEAST FIVE (5) WORKING DAYS PRIOR TO PERFORMING THE WORK.

APACHE LOUISINA MINERALS, INC. CONTACT: TIMOTHY J. ALLEN PHONE: (985) 876-5267	CONOCOPHILLIPS CONTACT: ASHLEY GOLMON PHONE: (985) 853-3001	TPCG CONTACT: TBA PHONE: (985) 868-5050
DENNIS CENAC III, ET AL. CONTACT: N/A PHONE: N/A		

3. MODIFICATIONS TO THE DREDGE PIPELINE CORRIDOR AND EQUIPMENT ACCESS CORRIDOR SHALL REQUIRE APPROVAL BY THE ENGINEER.

4. THE CONTRACTOR SHALL ADHERE TO THE MOST CURRENT PUBLICATIONS OF "RECOMMENDED BEST PRACTICES GUIDE FOR SAFE DREDGING NEAR UNDERWATER GAS & HAZARDOUS LIQUID PIPELINES", WWW.CDMCS.ORG, AND " WORKING SAFELY NEAR UNDERWATER PIPELINES", WWW.CAMOGROUP.ORG.

DESIGN NOTES:

1. ALL ELEVATIONS ARE GIVEN IN THE NORTH AMERICAN VERTICAL DATUM OF 1988 (NAVD 88) U.S. SURVEY FEET, GEOID 12A. ALL HORIZONTAL COORDINATES ARE GIVEN IN THE NORTH AMERICAN DATUM OF 1983 (NAD 83, LOUISIANA STATE PLANE SOUTH ZONE U.S. FEET). ALL ELEVATIONS ARE BASED ON THE FOLLOWING:

SECONDARY SURVEY MONUMENT	ELEVATION	NORTHING	EASTING
TE10-SM-08	1.09'	334,370.51	3,562,994.43
CRMSTE-SM-19	0.85'	303,440.70	3,533,118.70

3. DATA FROM STATIONS CRMS3296 AND CRMS0341 WERE USED TO CALCULATE THE MHW AND MLW. ELEVATIONS ARE REFERENCED TO NAVD 88, US FEET, GEOID 12A. MHW = +1.04' AND MLW = -0.25' WITHIN PROJECT AREA.

4. THE EXISTING ELEVATIONS SHOWN ON THE PLANS ARE BASED ON THE DESIGN SURVEYS PERFORMED IN 2016 BY T.BAKER SMITH, LLC. AND 2017 BY C.H. FENSTERMAKER ASSOCIATES, LLC. SURVEY INFORMATION IS INCLUDED IN THE APPENDICES TO THE DESIGN REPORT.

5. GEOTECHNICAL INVESTIGATION WERE PERFORMED BY GEOENGINEERS INC. IN 2015 AND 2018. GEOTECHNICAL INFORMATION IS INCLUDED IN THE APPENDICES TO THE DESIGN REPORT.

SUMMARY OF ESTIMATED QUANTITIES

ITEM No.	DESCRIPTION	UNIT	ESTIMATED QUANTITY[1]
1	MOBILIZATION AND DEMOBILIZATION (TS-100)	LS	1
2	SURVEYS (TS-200)	LS	1
3	GRADE STAKES (TS-220)	EA	24
4	SETTLEMENT PLATES (TS-250)	EA	11
5	INSTRUMENTED SETTLEMENT PLATES (TS-251)	EA	5
6	EARTHEN CONTAINMENT DIKES (TS-300)	LF	23,400
7	HYDRAULIC DREDGING AND MARSH FILL (TS-400)[2]	CY	1,503,000

1. WHERE THE QUANTITY OF WORK WITH RESPECT TO ANY ITEM IS COVERED BY A UNIT PRICE, SUCH QUANTITIES ARE ESTIMATED QUANTITIES TO BE USED WHEN COMPARING BIDS AND THE RIGHT IS RESERVED BY THE OWNER TO INCREASE/DECREASE SUCH QUANTITIES UP TO 25% WITHOUT ADJUSTMENT OF THE UNIT PRICE AS MAY BE NECESSARY TO COMPLETE THE WORK AS DESCRIBED IN THESE PLANS AND SPECIFICATIONS AND/OR REMAIN WITHIN FUNDING LIMITS.

2. QUANTITY IS BASED ON THE MARSH CREATION BORROW AREA CUT VOLUMES. PAYMENT QUANTITY WILL BE BASED ON PROCESS SURVEYS OF THE MARSH CREATION BORROW AREA.

ABBREVIATIONS:

ASCE	AMERICAN SOCIETY OF CIVIL ENG.	MCA	MARSH CREATION AREA
CC	CONVEYANCE CORRIDOR	MCBA	MARSH CREATION BORROW AREA
CMF	CONSTRUCTED MARSH FILL	NAC	NORTHERN ACCESS CORRIDOR
CPT	CONE PENETRATION TEST	NTS	NOT TO SCALE
CY	CUBIC YARD	PI	POINT OF INTERSECTION
DPC	DREDGE PIPE CORRIDOR	PL	VERIFIED PIPELINE
EAC	EQUIPMENT ACCESS CORRIDOR	SAC	SOUTHERN ACCESS CORRIDOR
EB	EXISTING WATER BOTTOM	SB	SOIL BORING
ECD	EARTHEN CONTAINMENT DIKE	SF	SQUARE FOOT
ECDBA	EARTHEN CONTAINMENT DIKE BORROW AREA	SM	SURVEY MONUMENT
		SP	SETTLEMENT PLATE
EG	EXISTING GROUND	ST	SURVEY TRANSECT
EL	ELEVATION	STA	STATION
FT	FOOT	SY	SQUARE YARD
HNC	HOUMA NAVIGATIONAL CHANNEL	TPCG	TERR. PARISH CONS. GOV.
LF	LINEAR FOOT	TS	TEMPORARY SPOIL
LS	LUMP SUM	UPL	UNVERIFIED PIPELINE
MBFM	THOUSAND BOARD FEET MEASURE		

LEGEND - SECTION VIEWS

- BORROW AREA
- CONSTRUCTED MARSH FILL
- EARTHEN CONTAINMENT DIKE
- OVER DREDGE
- EXISTING WATER BOTTOM

REV.	DATE	DESCRIPTION	BY

COASTAL PROTECTION AND RESTORATION AUTHORITY
150 TERRACE AVENUE
BATON ROUGE, LOUISIANA 70802

GENERAL NOTES

DESIGNED BY: JACQUES BOUDREAUX, P.E. - 0041685
APPROVED BY: DAIN GILLEN, P.E.

ISLAND ROAD MARSH CREATION AND NOURISHMENT PROJECT

STATE PROJECT NUMBER: TE-0117
DRAWN BY: SHANE FAUST

DATE: SEPTEMBER 2021

NORTHERN ACCESS CORRIDOR CENTERLINE COORDINATES

POINT	NORTHING	EASTING
1	334,492.69	3,563,125.81
2	326,598.25	3,561,656.75
3	325,887.94	3,558,213.12
4	326,725.38	3,554,801.51

CONVEYANCE CORRIDOR CENTERLINE COORDINATES

POINT	NORTHING	EASTING
5	323,224.62	3,553,025.73
6	322,404.76	3,552,796.10
7	322,151.22	3,552,750.01
8	321,691.06	3,552,767.09
9	321,392.38	3,552,839.55
10	320,965.71	3,553,036.13
11	317,129.72	3,552,853.27
12	316,531.37	3,553,102.31
13	316,009.77	3,552,705.93
14	315,009.88	3,553,018.23
15	314,118.17	3,552,767.95
16	313,097.94	3,552,820.67
17	310,912.93	3,553,157.18
18	310,074.69	3,552,960.15
19	308,789.47	3,552,981.08
20	308,390.99	3,552,912.63
21	307,790.68	3,552,621.11
22	302,024.81	3,552,120.37
23	298,637.72	3,552,120.37
24	298,637.72	3,552,070.03

SOUTHERN ACCESS CORRIDOR CENTERLINE COORDINATES

POINT	NORTHING	EASTING
25	298,089.15	3,546,480.33
26	298,089.15	3,546,358.42
27	295,362.65	3,546,358.42
28	294,417.29	3,546,208.79
29	293,894.48	3,546,007.13
30	292,921.55	3,545,092.41
31	289,810.64	3,546,741.80
32	286,786.73	3,546,874.84
33	277,731.08	3,543,701.02
34	262,135.40	3,539,156.24
35	258,346.47	3,539,917.01
36	254,371.16	3,537,827.62
37	239,063.90	3,535,524.92
38	208,165.06	3,522,053.48

ACCESS CORRIDOR INFORMATION

CORRIDOR	LENGTH (FT)	WIDTH (FT)
NAC	15,059	80
CC	25,140	80
SAC	95,638	80

PIPELINE CROSSING INFORMATION

ID	DESCRIPTION
PL-1	HARVEST NATURAL GAS
PL-2	WILLIAMS ENERGY NATURAL GAS
PL-3	UNKNOWN PIPELINE OWNER
PL-4	UNKNOWN PIPELINE OWNER
PL-5	KOCK NATURAL GAS
PL-6	COLUMBIA GULF NATURAL GAS
PL-7	GENESIS PETROLEUM
PL-8	HARVEST NATURAL GAS
PL-9	SOUTHERN NATURAL GAS
PL-10	HILCORP
PL-11	UNKNOWN PIPELINE OWNER
PL-12	HILCORP
PL-13	24" KINETICAL/36" TENN. GAS
PL-14	HARVEST/UNKNOWN

*SEE NOTE 6.

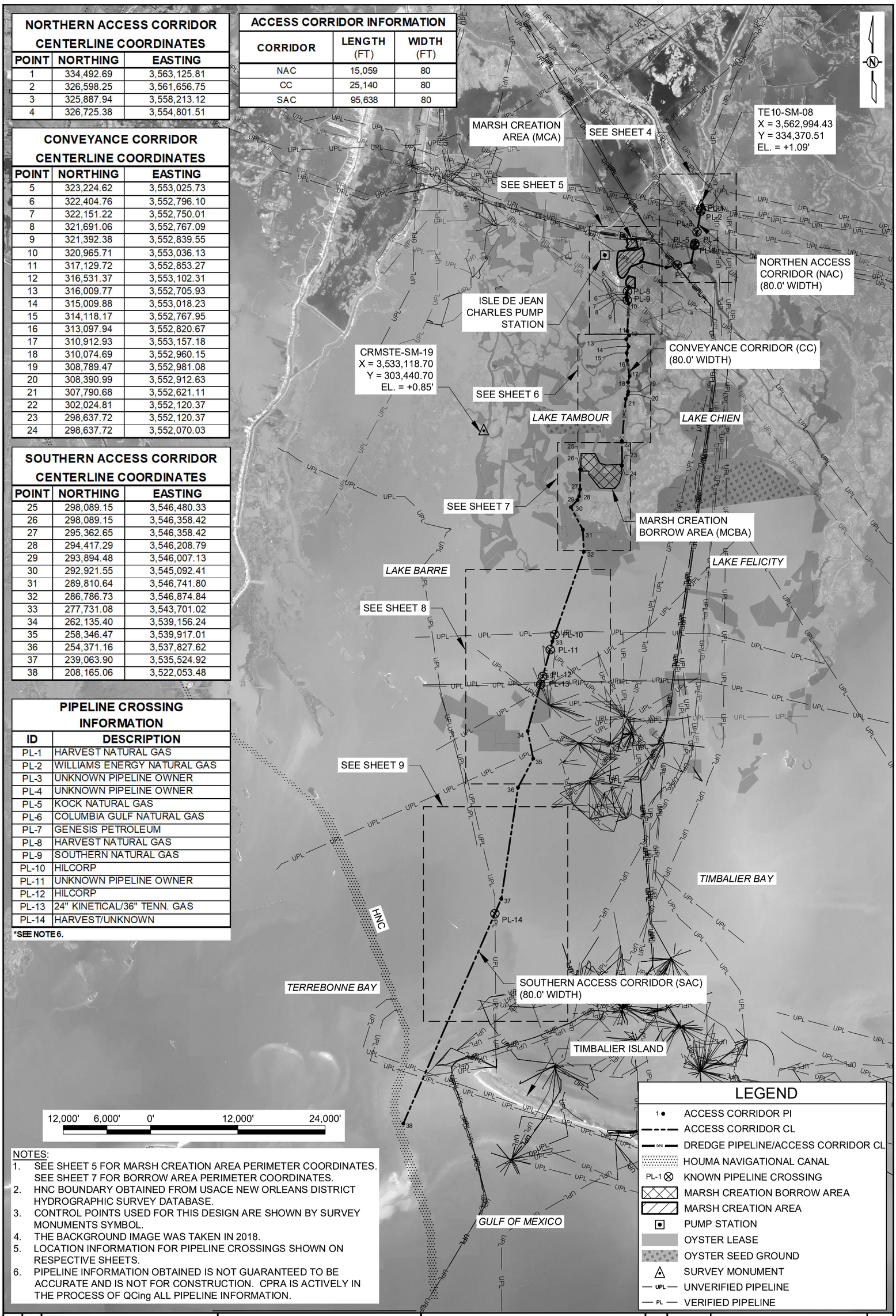

NOTES:

1. SEE SHEET 5 FOR MARSH CREATION AREA PERIMETER COORDINATES. SEE SHEET 7 FOR BORROW AREA PERIMETER COORDINATES.
2. HNC BOUNDARY OBTAINED FROM USACE NEW ORLEANS DISTRICT HYDROGRAPHIC SURVEY DATABASE.
3. CONTROL POINTS USED FOR THIS DESIGN ARE SHOWN BY SURVEY MONUMENTS SYMBOL.
4. THE BACKGROUND IMAGE WAS TAKEN IN 2018.
5. LOCATION INFORMATION FOR PIPELINE CROSSINGS SHOWN ON RESPECTIVE SHEETS.
6. PIPELINE INFORMATION OBTAINED IS NOT GUARANTEED TO BE ACCURATE AND IS NOT FOR CONSTRUCTION. CPRA IS ACTIVELY IN THE PROCESS OF QCing ALL PIPELINE INFORMATION.

SHEET 3 OF 25

DATE: SEPTEMBER 2021

ISLAND ROAD MARSH CREATION AND NOURISHMENT PROJECT

PROJECT LAYOUT AND ACCESS CORRIDORS

STATE PROJECT NUMBER: TE-0117

DESIGNED BY: JACQUES BOUDREAUX, P.E. - 0041685

DRAWN BY: SHANE FAUST

APPROVED BY: DAIN GILLEN, P.E.

COASTAL PROTECTION AND RESTORATION AUTHORITY
150 TERRACE AVENUE
BATON ROUGE, LOUISIANA 70802

REV.	DATE	DESCRIPTION	BY

PIPELINE CROSSING COORDINATES		
POINT	NORTHING	EASTING
PL-1	333,804.50	3,562,997.75
PL-2	333,607.88	3,562,961.16
PL-3	330,756.82	3,562,430.61
PL-4	329,183.83	3,562,137.89
PL-5	328,987.20	3,562,101.30
PL-6	328,888.89	3,562,083.01
PL-7	326,200.27	3,559,727.32

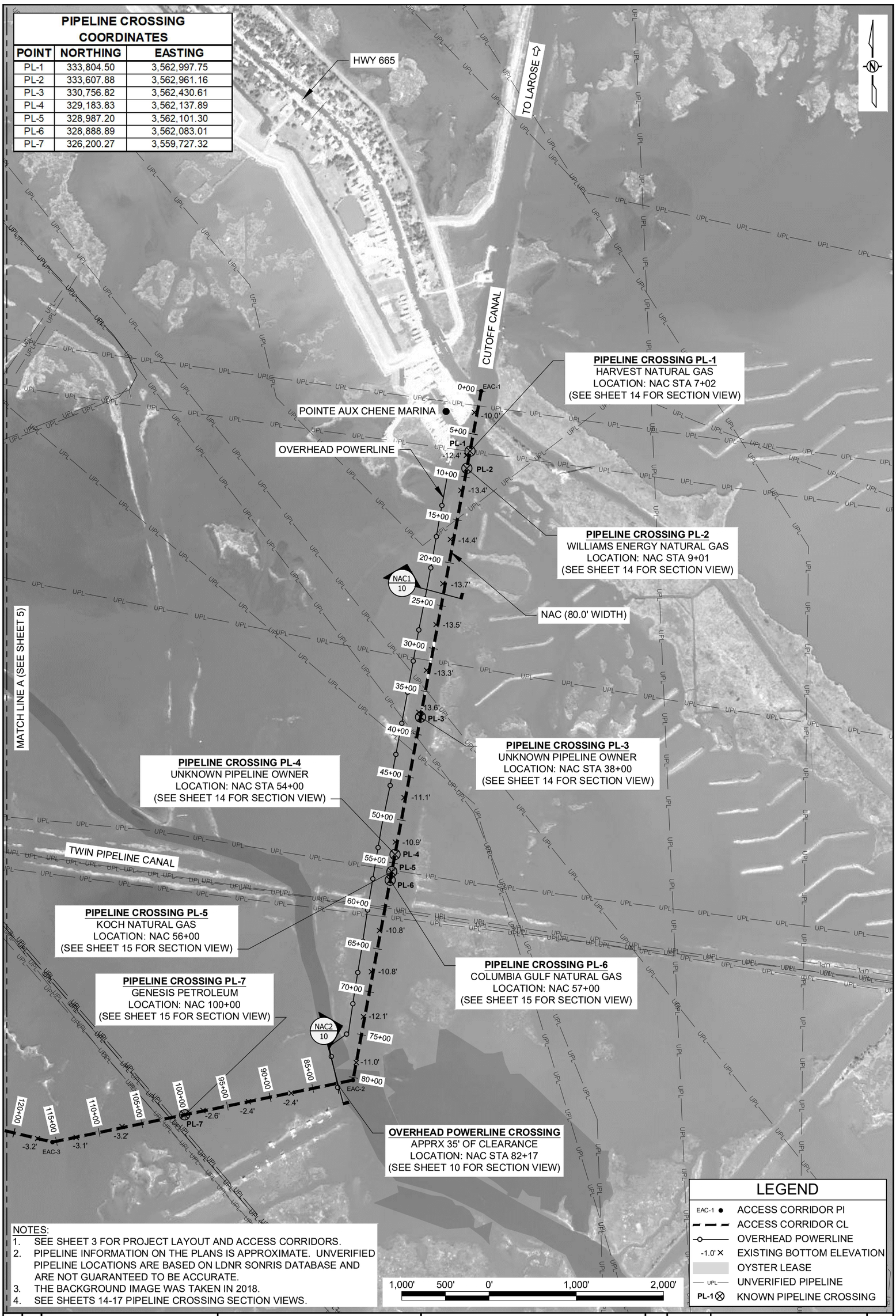

NOTES:
1. SEE SHEET 3 FOR PROJECT LAYOUT AND ACCESS CORRIDORS.
2. PIPELINE INFORMATION ON THE PLANS IS APPROXIMATE. UNVERIFIED PIPELINE LOCATIONS ARE BASED ON LDNR SONRIS DATABASE AND ARE NOT GUARANTEED TO BE ACCURATE.
3. THE BACKGROUND IMAGE WAS TAKEN IN 2018.
4. SEE SHEETS 14-17 PIPELINE CROSSING SECTION VIEWS.

LEGEND

EAC-1 ●	ACCESS CORRIDOR PI
	ACCESS CORRIDOR CL
	OVERHEAD POWERLINE
-1.0' ×	EXISTING BOTTOM ELEVATION
	OYSTER LEASE
UPL	UNVERIFIED PIPELINE
PL-1 ⊗	KNOWN PIPELINE CROSSING

SHEET 4 OF 25

DATE: SEPTEMBER 2021

ISLAND ROAD MARSH CREATION AND NOURISHMENT PROJECT

NORTHERN ACCESS CORRIDOR PLAN VIEW

STATE PROJECT NUMBER: TE-0117

DESIGNED BY: JACQUES BOUDREAUX, P.E. - 0041685

DRAWN BY: SHANE FAUST

APPROVED BY: DAIN GILLEN, P.E.

COASTAL PROTECTION AND RESTORATION AUTHORITY
150 TERRACE AVENUE
BATON ROUGE, LOUISIANA 70802

REV.	DATE	DESCRIPTION	BY

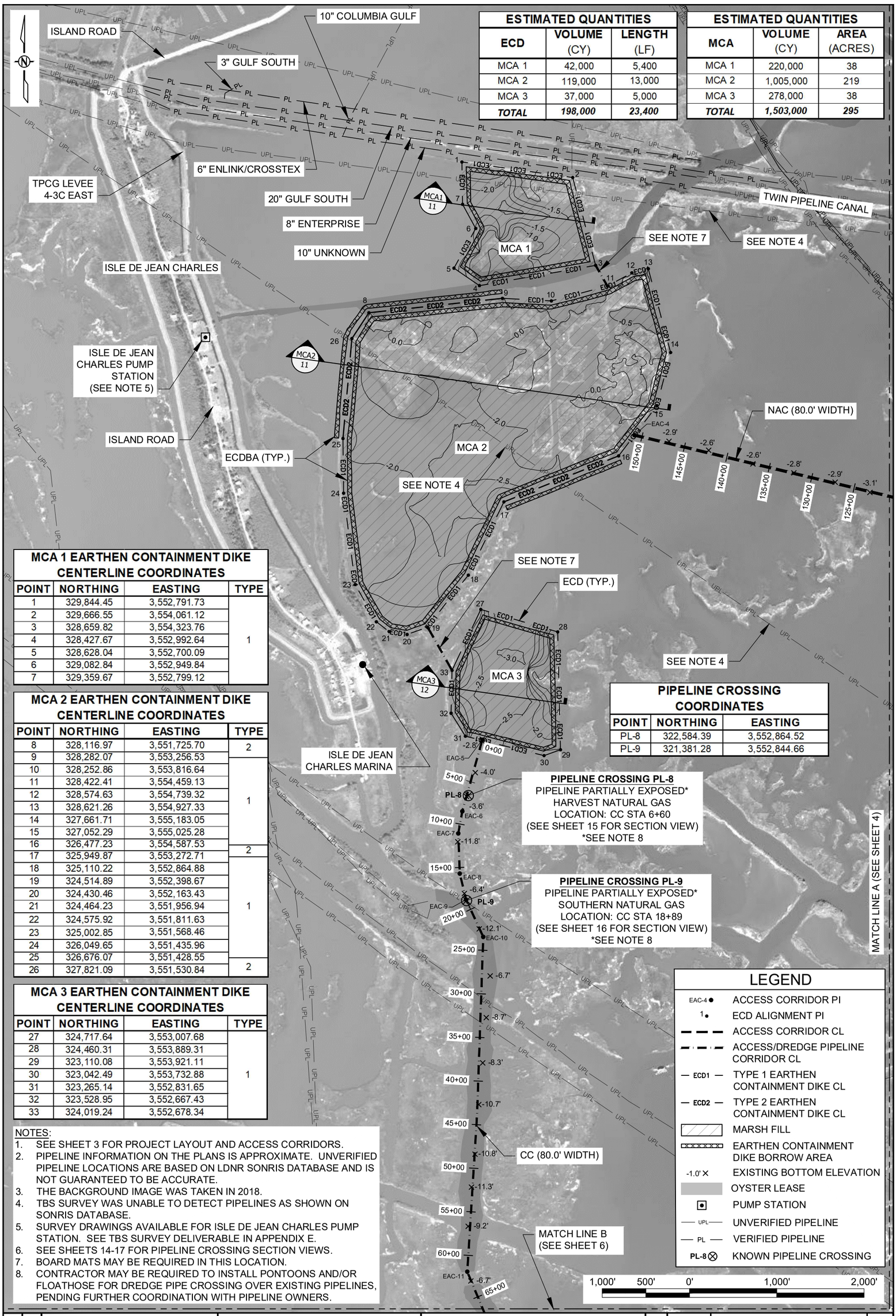

ESTIMATED QUANTITIES		
ECD	VOLUME (CY)	LENGTH (LF)
MCA 1	42,000	5,400
MCA 2	119,000	13,000
MCA 3	37,000	5,000
TOTAL	***198,000***	***23,400***

ESTIMATED QUANTITIES		
MCA	VOLUME (CY)	AREA (ACRES)
MCA 1	220,000	38
MCA 2	1,005,000	219
MCA 3	278,000	38
TOTAL	***1,503,000***	***295***

MCA 1 EARTHEN CONTAINMENT DIKE CENTERLINE COORDINATES

POINT	NORTHING	EASTING	TYPE
1	329,844.45	3,552,791.73	1
2	329,666.55	3,554,061.12	
3	328,659.82	3,554,323.76	
4	328,427.67	3,552,992.64	
5	328,628.04	3,552,700.09	
6	329,082.84	3,552,949.84	
7	329,359.67	3,552,799.12	

MCA 2 EARTHEN CONTAINMENT DIKE CENTERLINE COORDINATES

POINT	NORTHING	EASTING	TYPE
8	328,116.97	3,551,725.70	2
9	328,282.07	3,553,256.53	1
10	328,252.86	3,553,816.64	
11	328,422.41	3,554,459.13	
12	328,574.63	3,554,739.32	
13	328,621.26	3,554,927.33	
14	327,661.71	3,555,183.05	
15	327,052.29	3,555,025.28	
16	326,477.23	3,554,587.53	2
17	325,949.87	3,553,272.71	1
18	325,110.22	3,552,864.88	
19	324,514.89	3,552,398.67	
20	324,430.46	3,552,163.43	
21	324,464.23	3,551,956.94	
22	324,575.92	3,551,811.63	
23	325,002.85	3,551,568.46	
24	326,049.65	3,551,435.96	
25	326,676.07	3,551,428.55	
26	327,821.09	3,551,530.84	2

MCA 3 EARTHEN CONTAINMENT DIKE CENTERLINE COORDINATES

POINT	NORTHING	EASTING	TYPE
27	324,717.64	3,553,007.68	1
28	324,460.31	3,553,889.31	
29	323,110.08	3,553,921.11	
30	323,042.49	3,553,732.88	
31	323,265.14	3,552,831.65	
32	323,528.95	3,552,667.43	
33	324,019.24	3,552,678.34	

PIPELINE CROSSING COORDINATES

POINT	NORTHING	EASTING
PL-8	322,584.39	3,552,864.52
PL-9	321,381.28	3,552,844.66

NOTES:
1. SEE SHEET 3 FOR PROJECT LAYOUT AND ACCESS CORRIDORS.
2. PIPELINE INFORMATION ON THE PLANS IS APPROXIMATE. UNVERIFIED PIPELINE LOCATIONS ARE BASED ON LDNR SONRIS DATABASE AND IS NOT GUARANTEED TO BE ACCURATE.
3. THE BACKGROUND IMAGE WAS TAKEN IN 2018.
4. TBS SURVEY WAS UNABLE TO DETECT PIPELINES AS SHOWN ON SONRIS DATABASE.
5. SURVEY DRAWINGS AVAILABLE FOR ISLE DE JEAN CHARLES PUMP STATION. SEE TBS SURVEY DELIVERABLE IN APPENDIX E.
6. SEE SHEETS 14-17 FOR PIPELINE CROSSING SECTION VIEWS.
7. BOARD MATS MAY BE REQUIRED IN THIS LOCATION.
8. CONTRACTOR MAY BE REQUIRED TO INSTALL PONTOONS AND/OR FLOATHOSE FOR DREDGE PIPE CROSSING OVER EXISTING PIPELINES, PENDING FURTHER COORDINATION WITH PIPELINE OWNERS.

LEGEND

- EAC-4 ● ACCESS CORRIDOR PI
- 1 ● ECD ALIGNMENT PI
- ACCESS CORRIDOR CL
- ACCESS/DREDGE PIPELINE CORRIDOR CL
- ECD1 TYPE 1 EARTHEN CONTAINMENT DIKE CL
- ECD2 TYPE 2 EARTHEN CONTAINMENT DIKE CL
- MARSH FILL
- EARTHEN CONTAINMENT DIKE BORROW AREA
- -1.0' × EXISTING BOTTOM ELEVATION
- OYSTER LEASE
- PUMP STATION
- UPL UNVERIFIED PIPELINE
- PL VERIFIED PIPELINE
- PL-8 ⊗ KNOWN PIPELINE CROSSING

SHEET 5 OF 25	DATE: SEPTEMBER 2021	ISLAND ROAD MARSH CREATION AND NOURISHMENT PROJECT	MARSH CREATION AREA AND CONVEYANCE CORRIDOR PLAN VIEW
		STATE PROJECT NUMBER: TE-0117	DESIGNED BY: JACQUES BOUDREAUX, P.E. - 0041685
		DRAWN BY: SHANE FAUST	APPROVED BY: DAIN GILLEN, P.E.

COASTAL PROTECTION AND RESTORATION AUTHORITY
150 TERRACE AVENUE
BATON ROUGE, LOUISIANA 70802

REV.	DATE	DESCRIPTION	BY

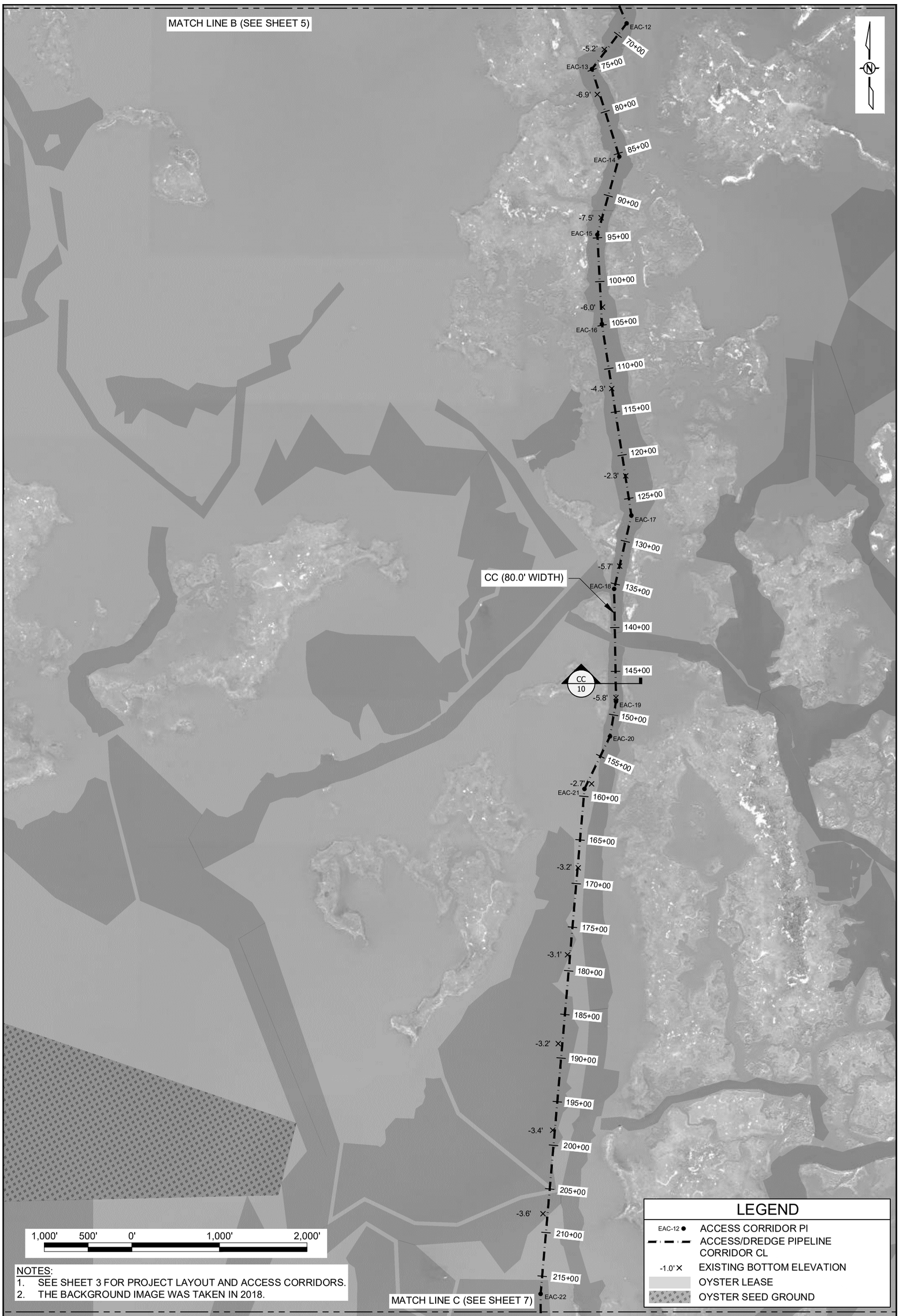

NOTES:
1. SEE SHEET 3 FOR PROJECT LAYOUT AND ACCESS CORRIDORS.
2. THE BACKGROUND IMAGE WAS TAKEN IN 2018.

SHEET 6 OF 25	DATE: SEPTEMBER 2021	ISLAND ROAD MARSH CREATION AND NOURISHMENT PROJECT	CONVEYANCE CORRIDOR PLAN VIEW
		STATE PROJECT NUMBER: TE-0117	DESIGNED BY: JACQUES BOUDREAUX, P.E. - 0041685
		DRAWN BY: SHANE FAUST	APPROVED BY: DAIN GILLEN, P.E.

COASTAL PROTECTION AND RESTORATION AUTHORITY
150 TERRACE AVENUE
BATON ROUGE, LOUISIANA 70802

REV.	DATE	DESCRIPTION	BY

MARSH CREATION BORROW AREA PERIMETER COORDINATES		
POINT	NORTHING	EASTING
1	300,277.42	3,546,480.34
2	300,277.41	3,548,405.16
3	298,968.37	3,549,092.55
4	298,706.32	3,549,956.75
5	298,837.72	3,552,077.01
6	298,280.31	3,552,057.56
7	297,589.09	3,552,137.32
8	296,221.77	3,551,733.60
9	295,460.68	3,551,124.02
10	295,537.42	3,549,066.28
11	297,455.35	3,547,540.05
12	297,889.15	3,547,540.05
13	297,889.15	3,546,480.33

ESTIMATED QUANTITIES		
MCBA	VOLUME (CY)	AREA (ACRES)
MCBA	4,561,581	394

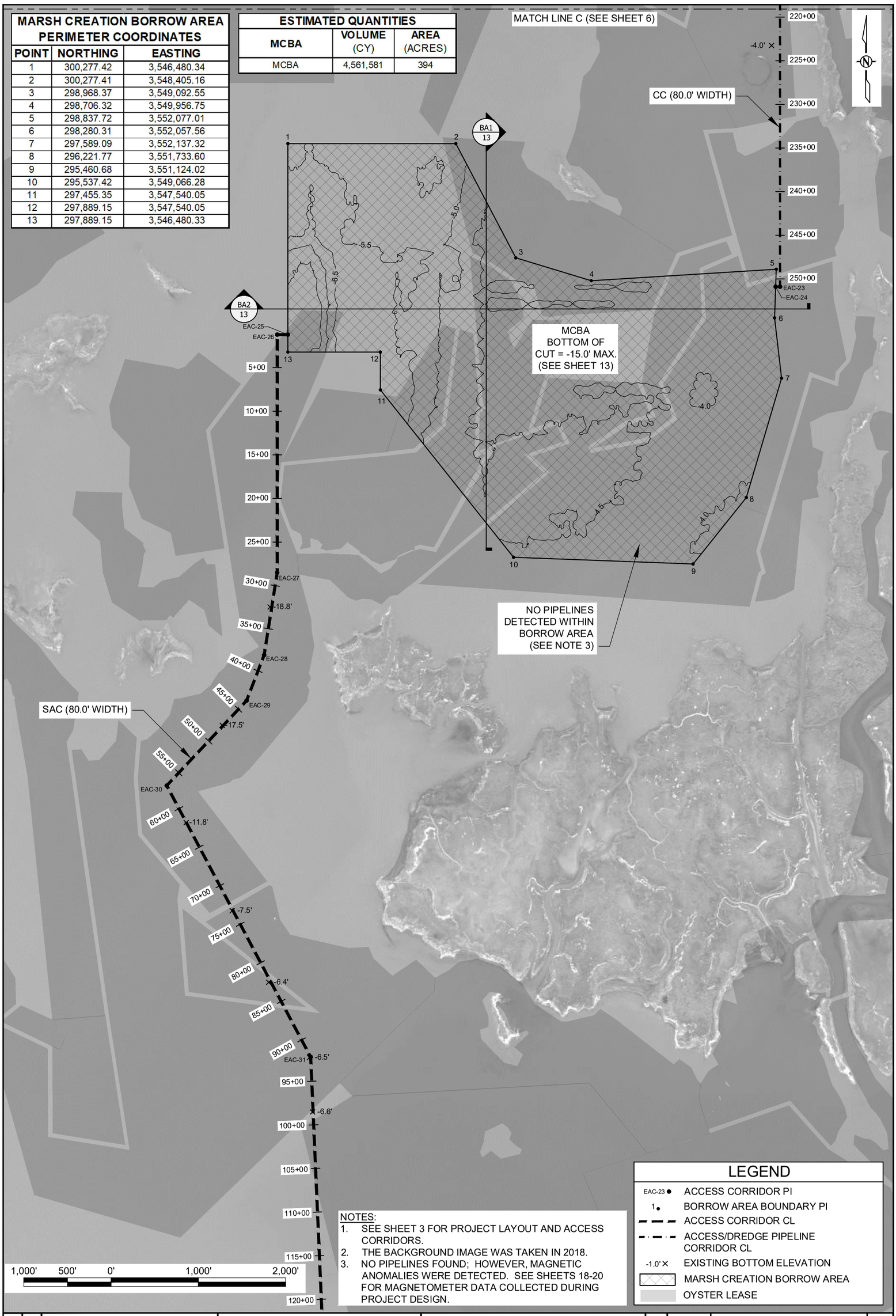

NOTES:
1. SEE SHEET 3 FOR PROJECT LAYOUT AND ACCESS CORRIDORS.
2. THE BACKGROUND IMAGE WAS TAKEN IN 2018.
3. NO PIPELINES FOUND; HOWEVER, MAGNETIC ANOMALIES WERE DETECTED. SEE SHEETS 18-20 FOR MAGNETOMETER DATA COLLECTED DURING PROJECT DESIGN.

LEGEND

EAC-23 ●	ACCESS CORRIDOR PI
1 ●	BORROW AREA BOUNDARY PI
	ACCESS CORRIDOR CL
	ACCESS/DREDGE PIPELINE CORRIDOR CL
-1.0' ×	EXISTING BOTTOM ELEVATION
	MARSH CREATION BORROW AREA
	OYSTER LEASE

SHEET 7 OF 25

DATE: SEPTEMBER 2021

ISLAND ROAD MARSH CREATION AND NOURISHMENT PROJECT

MARSH CREATION BORROW AREA PLAN VIEW

STATE PROJECT NUMBER: TE-0117

DESIGNED BY: JACQUES BOUDREAUX, P.E. - 0041685

DRAWN BY: SHANE FAUST

APPROVED BY: DAIN GILLEN, P.E.

COASTAL PROTECTION AND RESTORATION AUTHORITY
150 TERRACE AVENUE
BATON ROUGE, LOUISIANA 70802

REV.	DATE	DESCRIPTION	BY

PIPELINE CROSSING COORDINATES		
POINT	NORTHING	EASTING
PL-10	275,387.61	3,542,879.68
PL-11	273,327.03	3,542,243.02
PL-12	269,647.80	3,541,228.25
PL-13	268,535.57	3,540,921.48

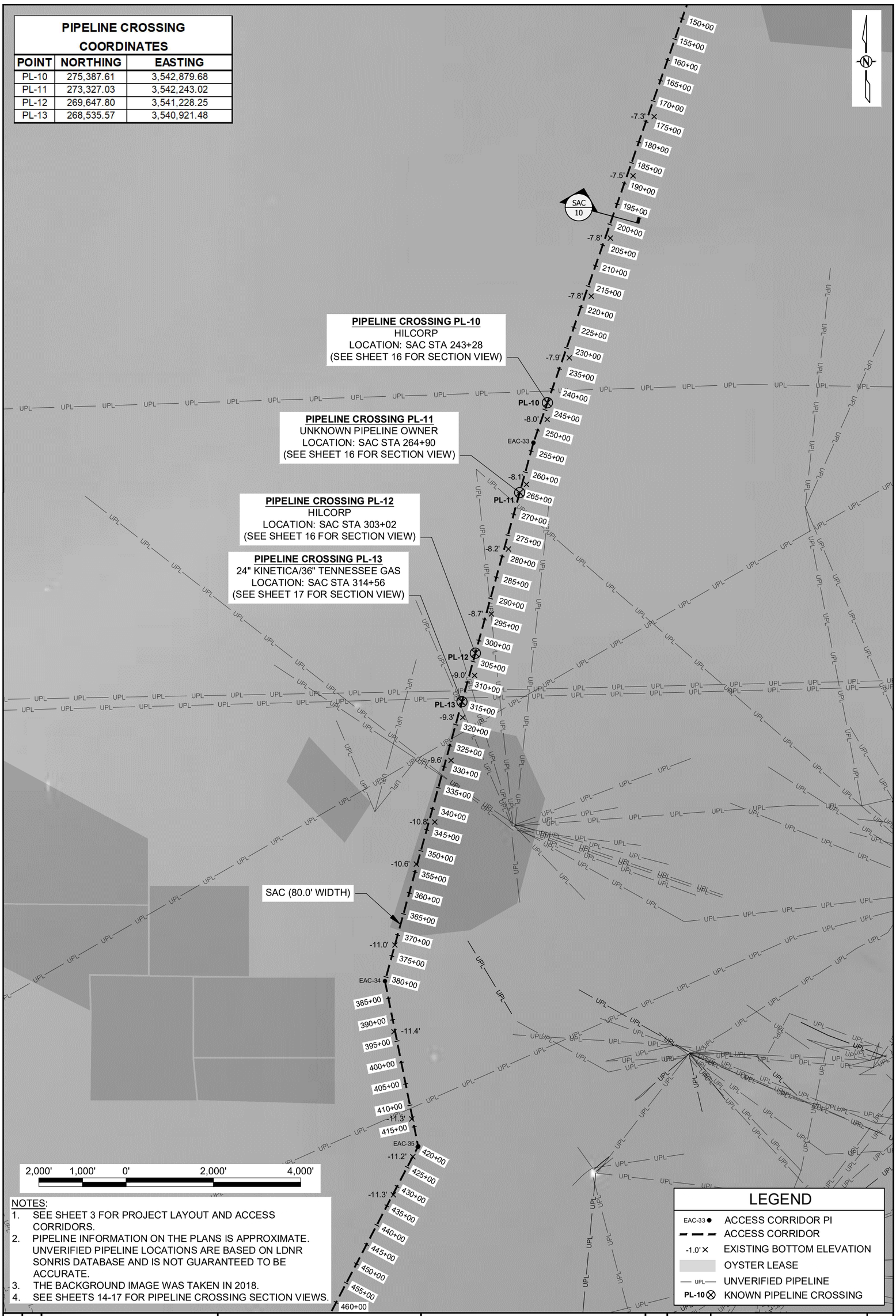

NOTES:
1. SEE SHEET 3 FOR PROJECT LAYOUT AND ACCESS CORRIDORS.
2. PIPELINE INFORMATION ON THE PLANS IS APPROXIMATE. UNVERIFIED PIPELINE LOCATIONS ARE BASED ON LDNR SONRIS DATABASE AND IS NOT GUARANTEED TO BE ACCURATE.
3. THE BACKGROUND IMAGE WAS TAKEN IN 2018.
4. SEE SHEETS 14-17 FOR PIPELINE CROSSING SECTION VIEWS.

LEGEND

EAC-33 ●	ACCESS CORRIDOR PI
— — —	ACCESS CORRIDOR
-1.0' ×	EXISTING BOTTOM ELEVATION
	OYSTER LEASE
— UPL —	UNVERIFIED PIPELINE
PL-10 ⊗	KNOWN PIPELINE CROSSING

SHEET 8 OF 25

DATE: SEPTEMBER 2021

ISLAND ROAD
MARSH CREATION AND
NOURISHMENT PROJECT

SOUTHERN ACCESS
CORRIDOR
PLAN VIEW

STATE PROJECT NUMBER: TE-0117

DESIGNED BY: JACQUES BOUDREAUX, P.E. - 0041685

DRAWN BY: SHANE FAUST

APPROVED BY: DAIN GILLEN, P.E.

COASTAL PROTECTION AND
RESTORATION AUTHORITY
150 TERRACE AVENUE
BATON ROUGE, LOUISIANA 70802

REV.	DATE	DESCRIPTION	BY

PIPELINE CROSSING COORDINATES		
POINT	NORTHING	EASTING
PL-14	237,023.51	3,534,635.34

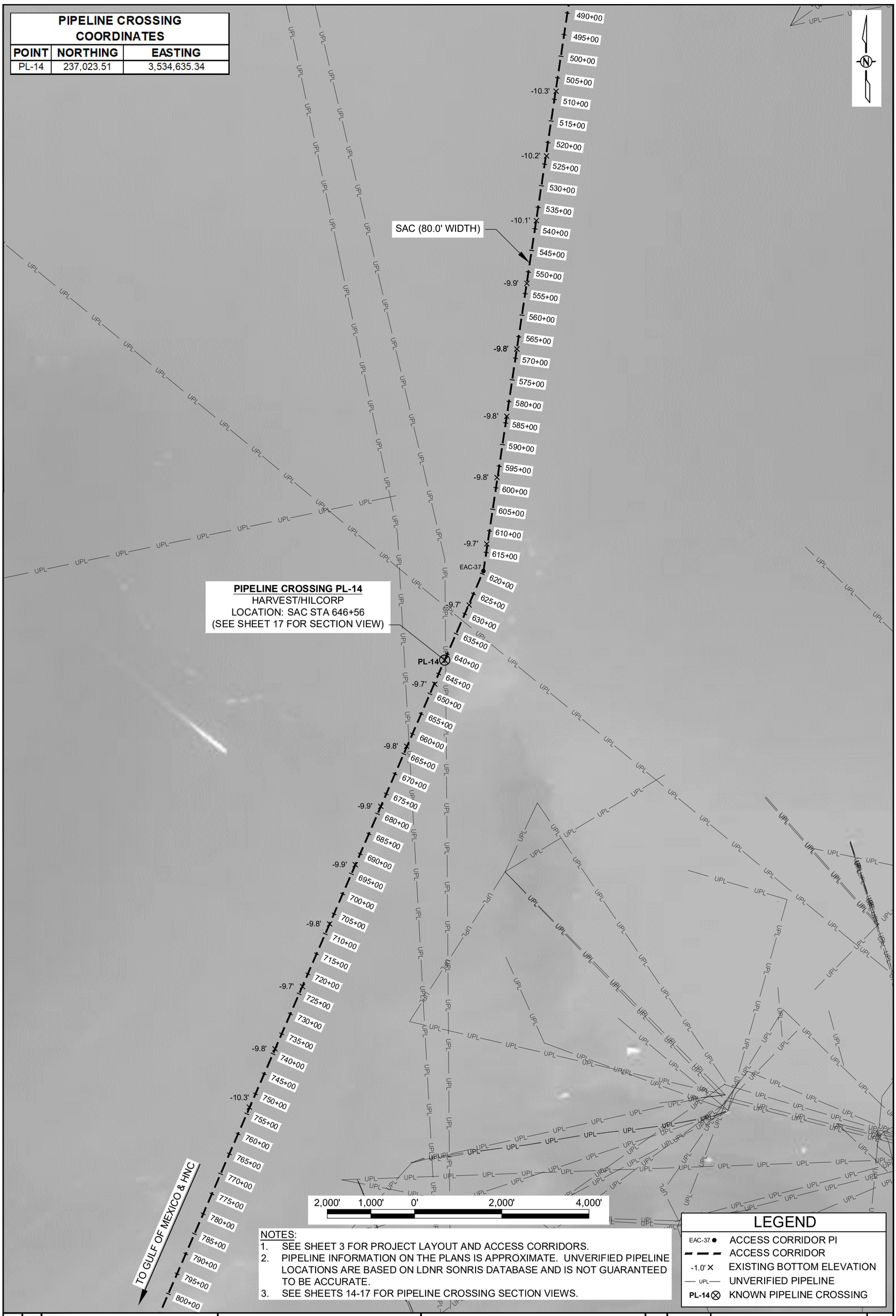

NOTES:
1. SEE SHEET 3 FOR PROJECT LAYOUT AND ACCESS CORRIDORS.
2. PIPELINE INFORMATION ON THE PLANS IS APPROXIMATE. UNVERIFIED PIPELINE LOCATIONS ARE BASED ON LDNR SONRIS DATABASE AND IS NOT GUARANTEED TO BE ACCURATE.
3. SEE SHEETS 14-17 FOR PIPELINE CROSSING SECTION VIEWS.

LEGEND

EAC-37 ●	ACCESS CORRIDOR PI
	ACCESS CORRIDOR
-1.0' ×	EXISTING BOTTOM ELEVATION
UPL	UNVERIFIED PIPELINE
PL-14 ⊗	KNOWN PIPELINE CROSSING

ISLAND ROAD
MARSH CREATION AND
NOURISHMENT PROJECT

SOUTHERN ACCESS
CORRIDOR
PLAN VIEW

COASTAL PROTECTION AND
RESTORATION AUTHORITY
150 TERRACE AVENUE
BATON ROUGE, LOUISIANA 70802

STATE PROJECT NUMBER: TE-0117

DESIGNED BY: JACQUES BOUDREAUX, P.E. - 0041685

DRAWN BY: SHANE FAUST

APPROVED BY: DAIN GILLEN, P.E.

REV.	DATE	DESCRIPTION	BY

DATE: SEPTEMBER 2021

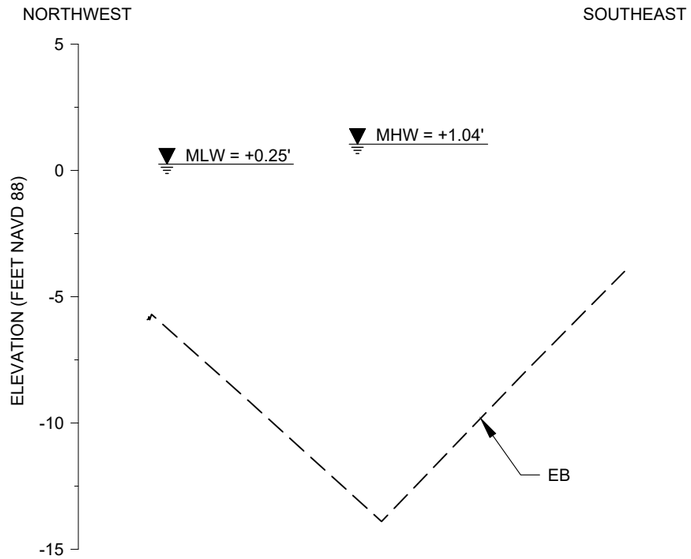

NAC1 4 NORTHERN ACCESS CORRIDOR TYPICAL SECTION

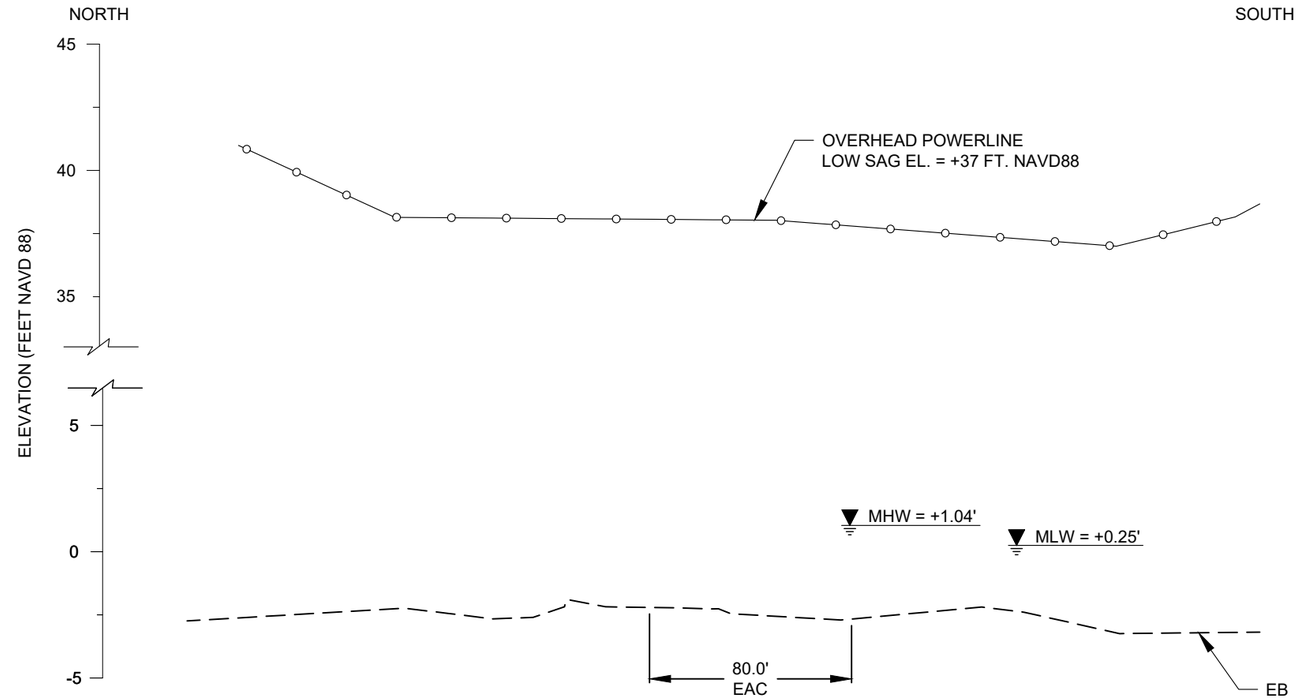

NAC2 4 NORTHERN ACCESS CORRIDOR TYPICAL SECTION

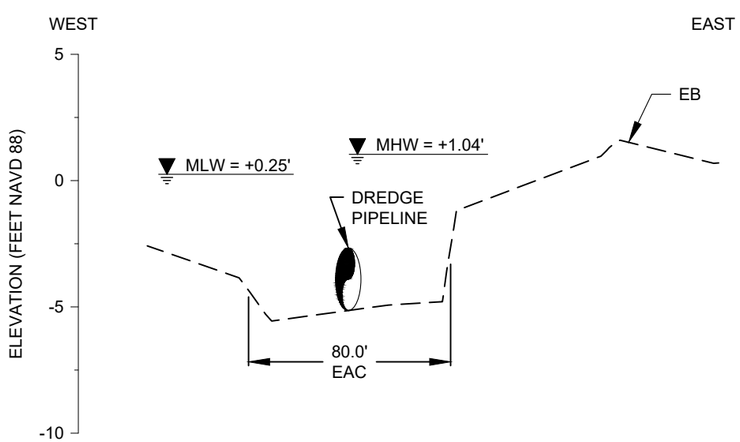

CC 6 CONVEYANCE CORRIDOR TYPICAL SECTION

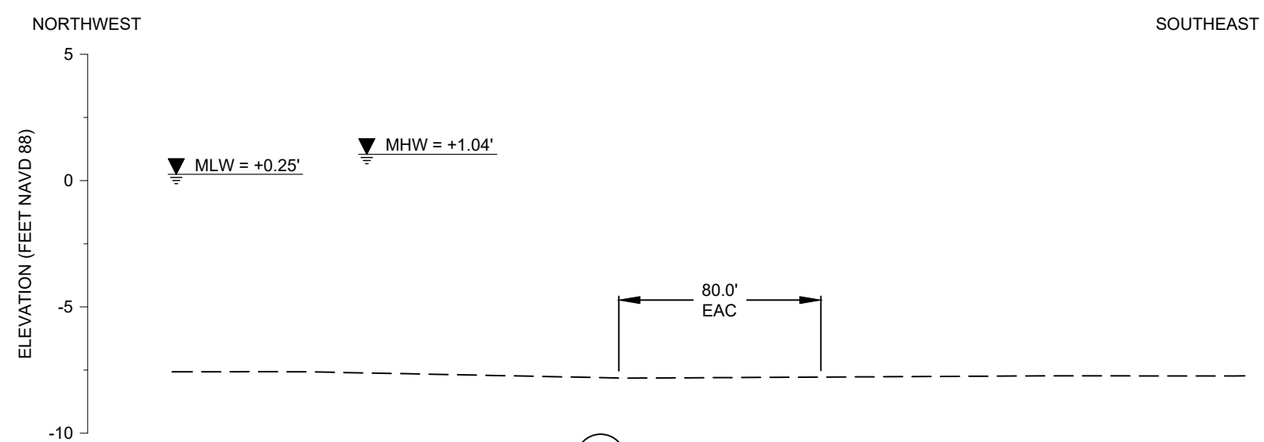

SAC 4 SOUTHERN ACCESS CORRIDOR TYPICAL SECTION

HORIZONTAL GRAPHIC SCALE
60' 30' 0 60' 120'
6' 3' 0 6' 12'
VERTICAL GRAPHIC SCALE

NOTES:
1. NO PROPWASHING OR ACCESS DREDGING WILL BE ALLOWED.
2. CHF PERFORMED A TOPOGRAPHIC SURVEY IN THE VICINITY AND DETERMINED THE ELEVATION OF THE LOW SAG OF THE SHOWN OVERHEAD POWERLINE TO BE +37 FT. NAVD88.

REV.	DATE	DESCRIPTION	BY

COASTAL PROTECTION AND RESTORATION AUTHORITY
150 TERRACE AVENUE
BATON ROUGE, LOUISIANA 70802

TYPICAL SECTIONS

DESIGNED BY: JACQUES BOUDREAUX, P.E. - 0041685
APPROVED BY: DAIN GILLEN, P.E.

ISLAND ROAD MARSH CREATION AND NOURISHMENT PROJECT

STATE PROJECT NUMBER: TE-0117
DRAWN BY: SHANE FAUST

DATE: SEPTEMBER 2021

SHEET 10 OF 25

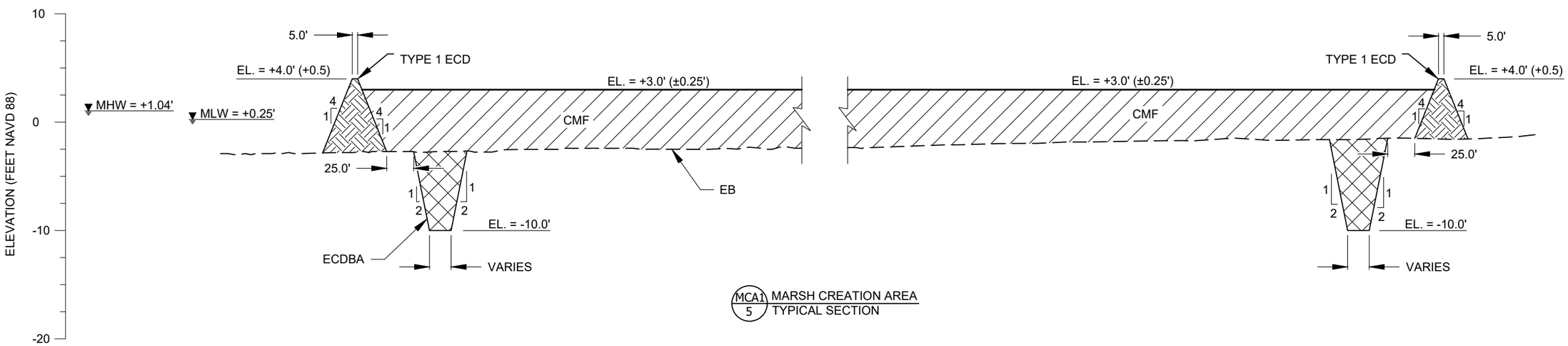

MCA1 / 5 MARSH CREATION AREA TYPICAL SECTION

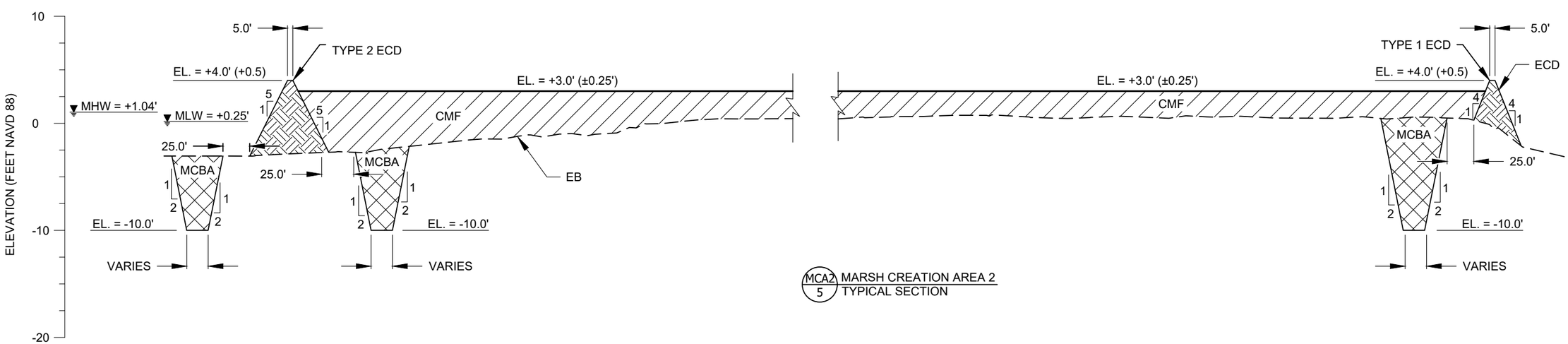

MCA2 / 5 MARSH CREATION AREA 2 TYPICAL SECTION

NOTES:

1. CONTRACTOR SHALL MAINTAIN A MINIMUM 1.0' FREEBOARD FROM THE TOP OF THE EARTHEN CONTAINMENT DIKE CREST TO THE TOP OF THE CONSTRUCTED MARSH FILL.
2. THE CONSTRUCTION CONTRACTOR WILL BE REQUIRED TO PERFORM A PRE-CONSTRUCTION SURVEY IN ORDER TO LOCATE ANY AND ALL PIPELINE INFRASTRUCTURE AND POTENTIAL HAZARDS AND IN ORDER TO DETERMINE CHANGES IN TOPOGRAPHIC/BATHYMETRIC CONDITIONS.

HORIZONTAL GRAPHIC SCALE

60' 30' 0 60' 120'

10' 5' 0 10' 20'

VERTICAL GRAPHIC SCALE

REV.	DATE	DESCRIPTION	BY

COASTAL PROTECTION AND RESTORATION AUTHORITY
150 TERRACE AVENUE
BATON ROUGE, LOUISIANA 70802

TYPICAL SECTIONS

DESIGNED BY: JACQUES BOUDREAUX, P.E. - 0041685

APPROVED BY: DAIN GILLEN, P.E.

ISLAND ROAD MARSH CREATION AND NOURISHMENT PROJECT

STATE PROJECT NUMBER: TE-0117

DRAWN BY: SHANE FAUST

DATE: SEPTEMBER 2021

SHEET 11 OF 25

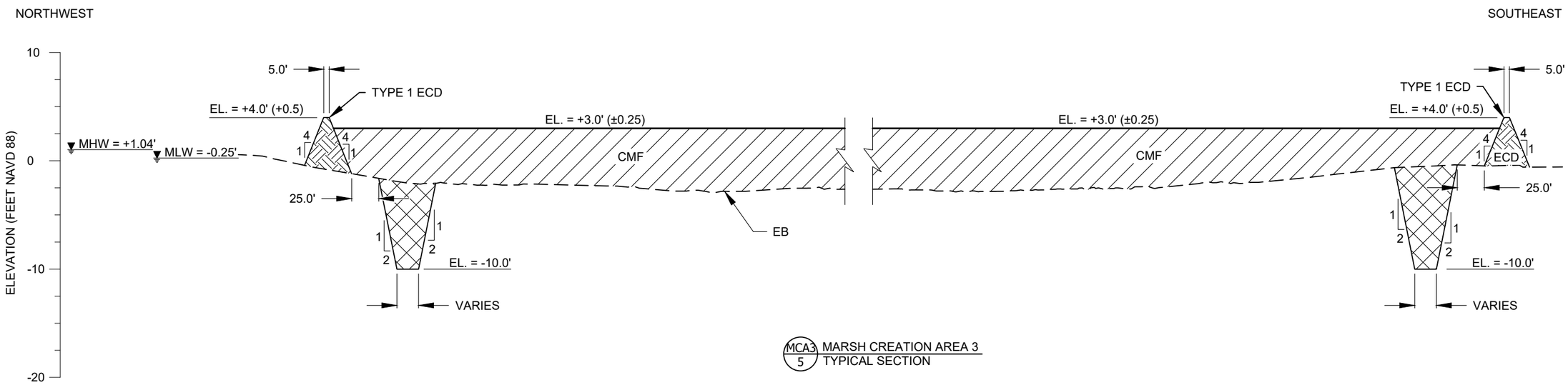

MCA3 / 5 MARSH CREATION AREA 3
TYPICAL SECTION

NOTES:

1. CONTRACTOR SHALL MAINTAIN A MINIMUM 1.0' FREEBOARD FROM THE TOP OF THE EARTHEN CONTAINMENT DIKE CREST TO THE TOP OF THE CONSTRUCTED MARSH FILL.
2. THE CONSTRUCTION CONTRACTOR WILL BE REQUIRED TO PERFORM A PRE-CONSTRUCTION SURVEY IN ORDER TO LOCATE ANY AND ALL PIPELINE INFRASTRUCTURE AND POTENTIAL HAZARDS AND IN ORDER TO DETERMINE CHANGES IN TOPOGRAPHIC/BATHYMETRIC CONDITIONS.

HORIZONTAL GRAPHIC SCALE
60' 30' 0 60' 120'
10' 5' 0 10' 20'
VERTICAL GRAPHIC SCALE

REV.	DATE	DESCRIPTION	BY

COASTAL PROTECTION AND RESTORATION AUTHORITY
150 TERRACE AVENUE
BATON ROUGE, LOUISIANA 70802

TYPICAL SECTIONS

DESIGNED BY: JACQUES BOUDREAUX, P.E. - 0041685
APPROVED BY: DAIN GILLEN, P.E.

ISLAND ROAD
MARSH CREATION AND
NOURISHMENT PROJECT

STATE PROJECT NUMBER: TE-0117
DRAWN BY: SHANE FAUST

DATE: SEPTEMBER 2021

SHEET 12 OF 25

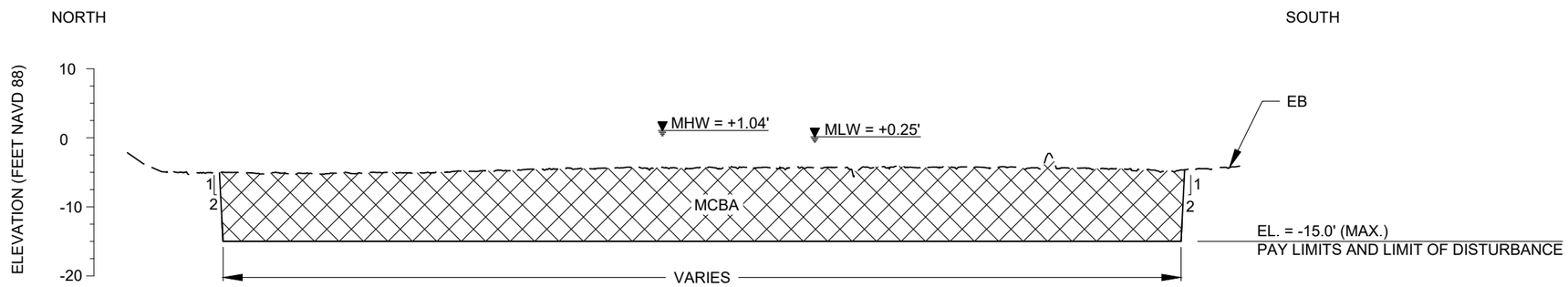

BA1 / 7 MARSH CREATION BORROW AREA
TYPICAL SECTION

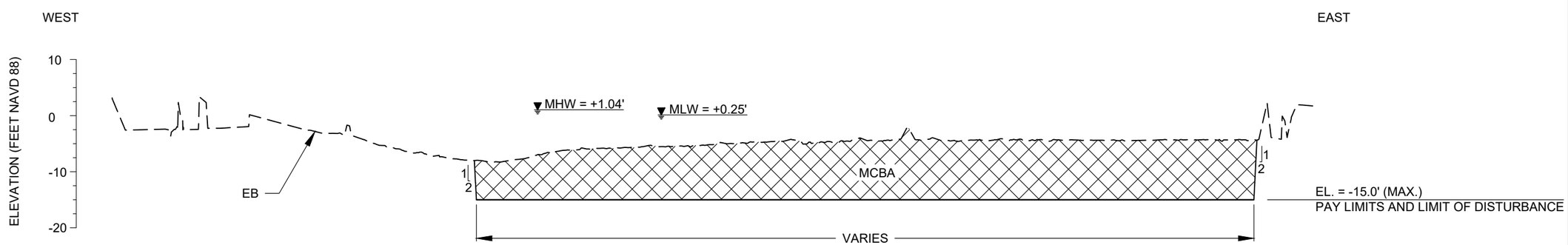

BA2 / 7 MARSH CREATION BORROW AREA
TYPICAL SECTION

NOTES:
1. THE CONSTRUCTION CONTRACTOR WILL BE REQUIRED TO PERFORM A PRE-CONSTRUCTION SURVEY IN ORDER TO LOCATE ANY AND ALL PIPELINE INFRASTRUCTURE AND POTENTIAL HAZARDS AND IN ORDER TO DETERMINE CHANGES IN TOPOGRAPHIC/BATHYMETRIC CONDITIONS.
2. THE CONTRACTOR SHALL BE AWARE OF OBSTRUCTIONS THROUGHOUT PROJECT SITE, AS DISCUSSED IN SECTION SP-15 OF THE SPECIFICATIONS.

HORIZONTAL GRAPHIC SCALE
200' 100' 0 200' 400'
20' 10' 0 20' 40'
VERTICAL GRAPHIC SCALE

REV.	DATE	DESCRIPTION	BY

COASTAL PROTECTION AND RESTORATION AUTHORITY
150 TERRACE AVENUE
BATON ROUGE, LOUISIANA 70802

TYPICAL SECTIONS

DESIGNED BY: JACQUES BOUDREAUX, P.E. - 0041685
APPROVED BY: DAIN GILLEN, P.E.

ISLAND ROAD
MARSH CREATION AND
NOURISHMENT PROJECT

STATE PROJECT NUMBER: TE-0117
DRAWN BY: SHANE FAUST

DATE: SEPTEMBER 2021

SHEET 13 OF 25

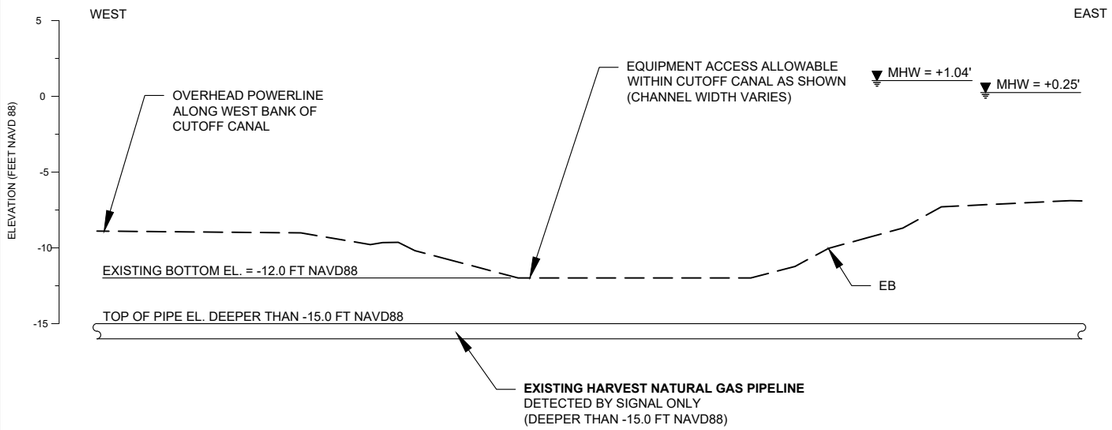

PL-1 / 4 PIPELINE CROSSING PL-1
LOCATION: NAC STA 7+02

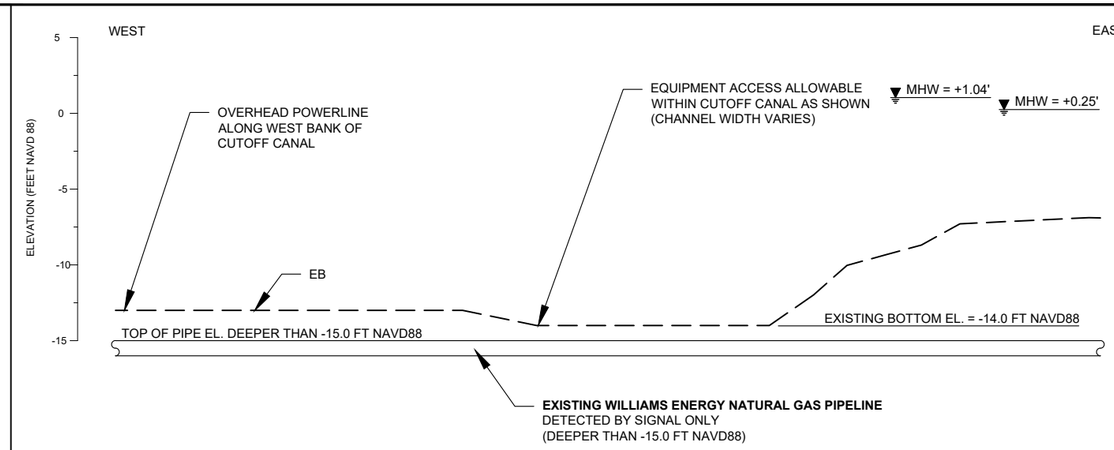

PL-2 / 4 PIPELINE CROSSING PL-2
LOCATION: NAC STA 9+01

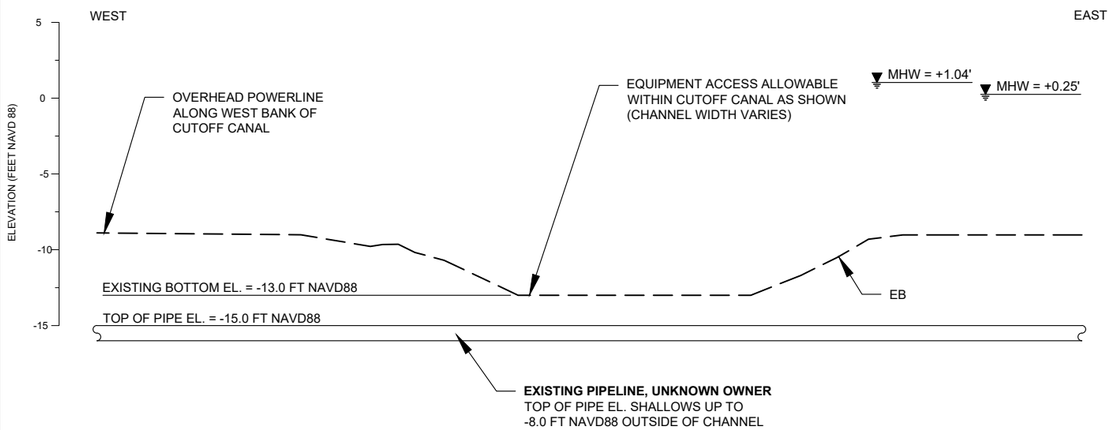

PL-3 / 4 PIPELINE CROSSING PL-3
LOCATION: NAC STA 38+00

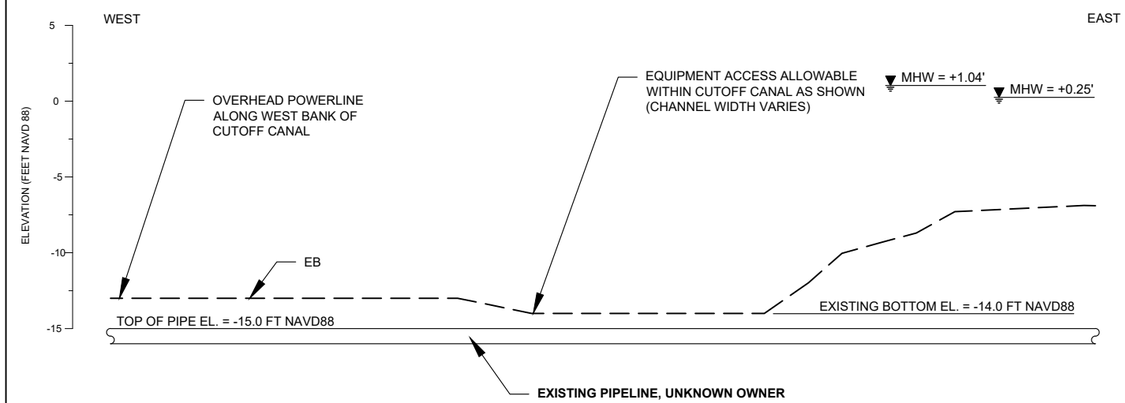

PL-4 / 4 PIPELINE CROSSING PL-5
LOCATION: NAC STA 54+00

NOTES:

1. EXISTING BATHYMETRIC SURVEY DATA WAS COLLECTED BY CHF. TOP OF PIPE ELEVATIONS WERE ALSO SURVEYED BY CHF. SHOWN BATHYMETRY IS BASED ON LIMITED SURVEY DATA AND IS TO BE USED ONLY TO INTERPRET LIKELY CONDITIONS THAT WILL NEED TO BE VERIFIED WITH CONTRACTOR SURVEYS. ADDITIONAL INFORMATION IS AVAILABLE IN APPENDIX F.
2. TOP OF PIPE ELEVATIONS VARY AT EACH CROSSING, AND IN SOME CASES MULTIPLE PIPELINES MAY BE PRESENT. AS DRAWN, ALL PIPELINE CROSSINGS REPRESENT THE MOST SHALLOW TOP OF PIPE ELEVATIONS OBSERVED AT EACH PIPELINE CROSSING IN ORDER TO DEPICT GOVERNING CONDITIONS.
3. SOME PIPELINES WERE LOCATED SIGNIFICANTLY DEEP TO WHERE CONTACT WITH THE PROBING ROD WAS NOT POSSIBLE. IN THESE CASES, THE PRESENCE OF PIPELINES WERE DETECTED BY SIGNAL ONLY AND TOP OF PIPE ELEVATION WAS GIVEN AS < 15 FT NAVD88.

GRAPHIC SCALE FOR ALL DRAWINGS

HORIZONTAL GRAPHIC SCALE

100' 50' 0 100' 200'

10' 5' 0 10' 20'

VERTICAL GRAPHIC SCALE

REV.	DATE	DESCRIPTION	BY

COASTAL PROTECTION AND RESTORATION AUTHORITY
150 TERRACE AVENUE
BATON ROUGE, LOUISIANA 70802

PIPELINE CROSSINGS

DESIGNED BY: JACQUES BOUDREAUX, P.E. - 0041685

APPROVED BY: DAIN GILLEN, P.E.

ISLAND ROAD MARSH CREATION AND NOURISHMENT PROJECT

STATE PROJECT NUMBER: TE-0117

DRAWN BY: SHANE FAUST

DATE: SEPTEMBER 2021

SHEET 14 OF 25

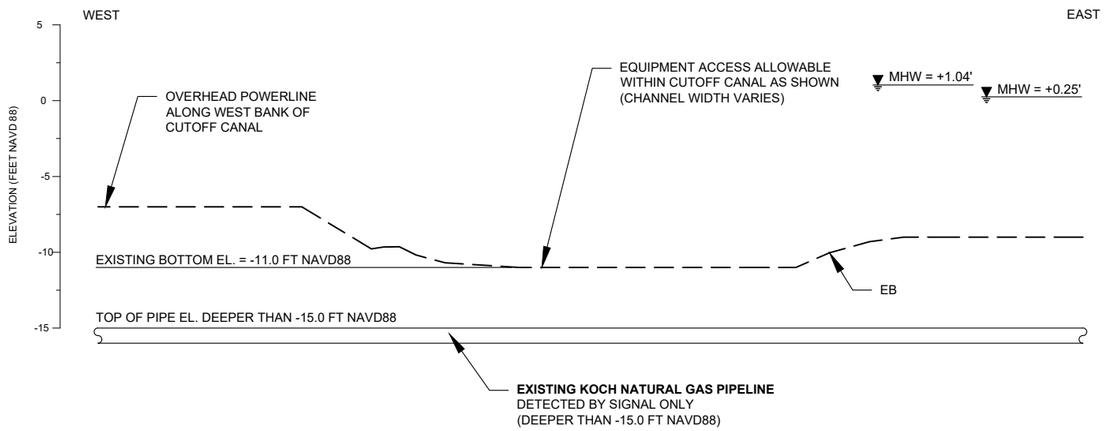

PL-5 / 4 PIPELINE CROSSING PL-5
LOCATION: NAC STA 56+00

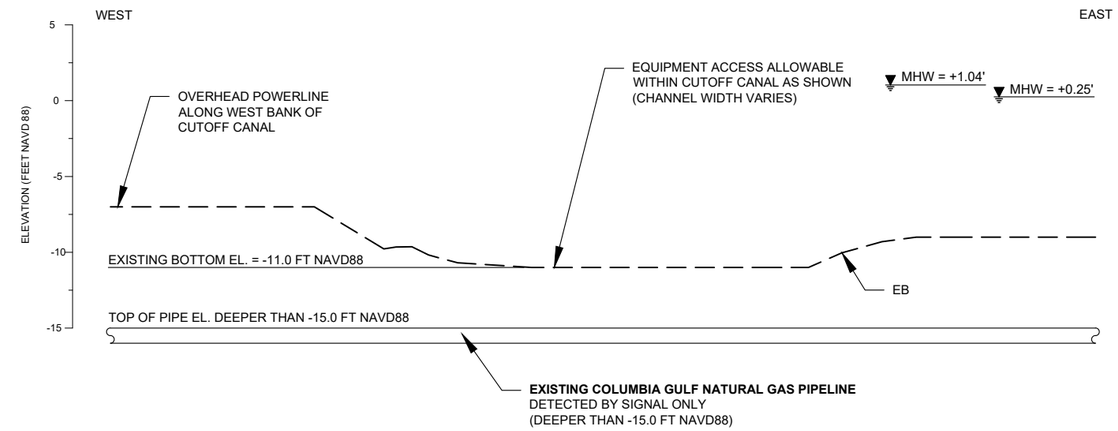

PL-6 / 4 PIPELINE CROSSING PL-6
LOCATION: NAC STA 57+00

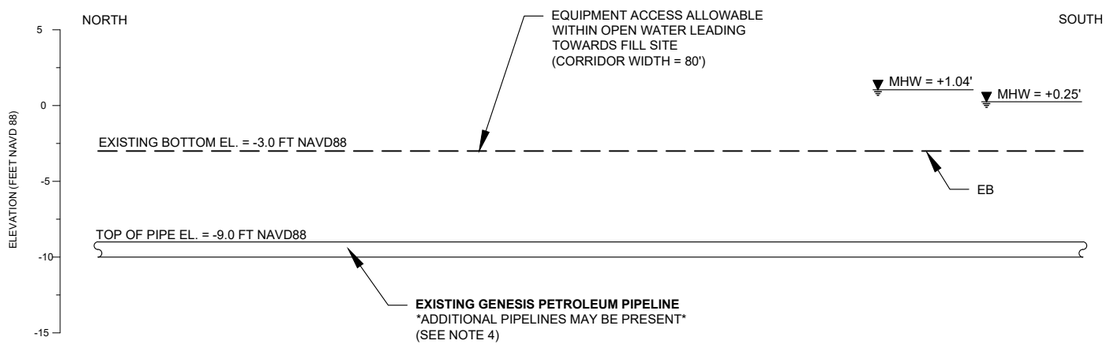

PL-7 / 4 PIPELINE CROSSING PL-7
LOCATION: NAC STA 100+00

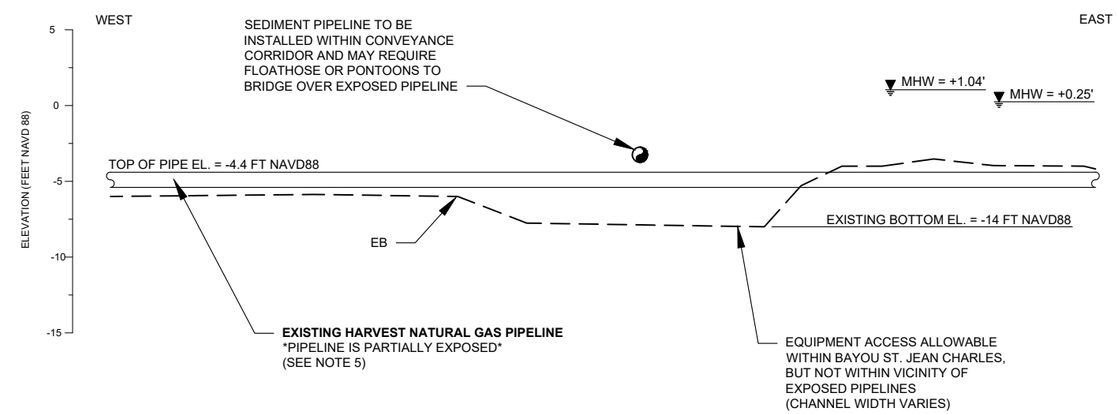

PL-8 / 5 PIPELINE CROSSING PL-8
LOCATION: CC STA 6+60

NOTES:

1. EXISTING BATHYMETRIC SURVEY DATA WAS COLLECTED BY CHF. TOP OF PIPE ELEVATIONS WERE ALSO SURVEYED BY CHF. SHOWN BATHYMETRY IS BASED ON LIMITED SURVEY DATA AND IS TO BE USED ONLY TO INTERPRET LIKELY CONDITIONS THAT WILL NEED TO BE VERIFIED WITH CONTRACTOR SURVEYS. ADDITIONAL INFORMATION IS AVAILABLE IN APPENDIX F.
2. TOP OF PIPE ELEVATIONS VARY AT EACH CROSSING, AND IN SOME CASES MULTIPLE PIPELINES MAY BE PRESENT. AS DRAWN, ALL PIPELINE CROSSINGS REPRESENT THE MOST SHALLOW TOP OF PIPE ELEVATIONS OBSERVED AT EACH PIPELINE CROSSING IN ORDER TO DEPICT GOVERNING CONDITIONS.
3. SOME PIPELINES WERE LOCATED SIGNIFICANTLY DEEP TO WHERE CONTACT WITH THE PROBING ROD WAS NOT POSSIBLE. IN THESE CASES, THE PRESENCE OF PIPELINES WERE DETECTED BY SIGNAL ONLY AND TOP OF PIPE ELEVATION WAS GIVEN AS < 15 FT NAVD88.
4. SIGNAGE FOR ADDITIONAL SHELL PIPELINE OBSERVED IN THE FIELD, HOWEVER NO ADDITIONAL PIPELINES DETECTED.
5. CONTRACTOR MAY BE REQUIRED TO INSTALL PONTOONS AND/OR FLOATHOSE FOR DREDGE PIPE CROSSING OVER EXISTING PIPELINES, PENDING FURTHER COORDINATION WITH PIPELINE OWNERS.

GRAPHIC SCALE FOR ALL DRAWINGS

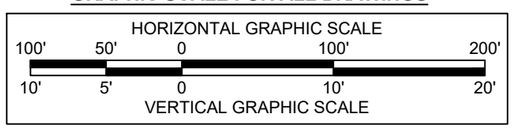

REV.	DATE	DESCRIPTION	BY

COASTAL PROTECTION AND RESTORATION AUTHORITY
150 TERRACE AVENUE
BATON ROUGE, LOUISIANA 70802

PIPELINE CROSSINGS

DESIGNED BY: JACQUES BOUDREAUX, P.E. - 0041685
APPROVED BY: DAIN GILLEN, P.E.

ISLAND ROAD MARSH CREATION AND NOURISHMENT PROJECT

STATE PROJECT NUMBER: TE-0117
DRAWN BY: SHANE FAUST

DATE: SEPTEMBER 2021

SHEET 15 OF 25

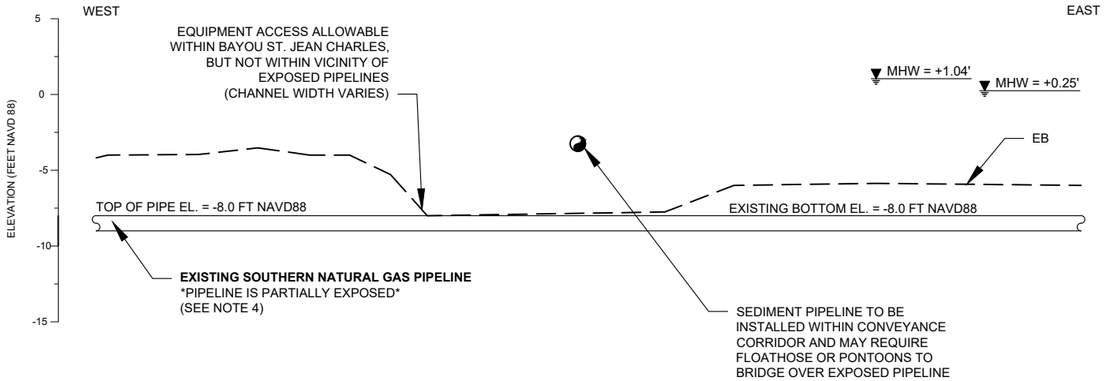

PL-9 / 5 PIPELINE CROSSING PL-9
LOCATION: CC STA 18+89

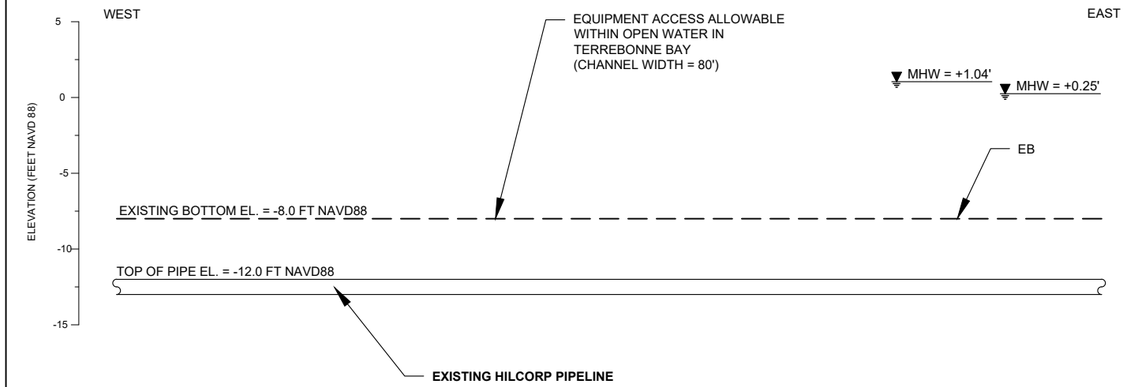

PL-10 / 8 PIPELINE CROSSING PL-10
LOCATION: SAC STA 243+28

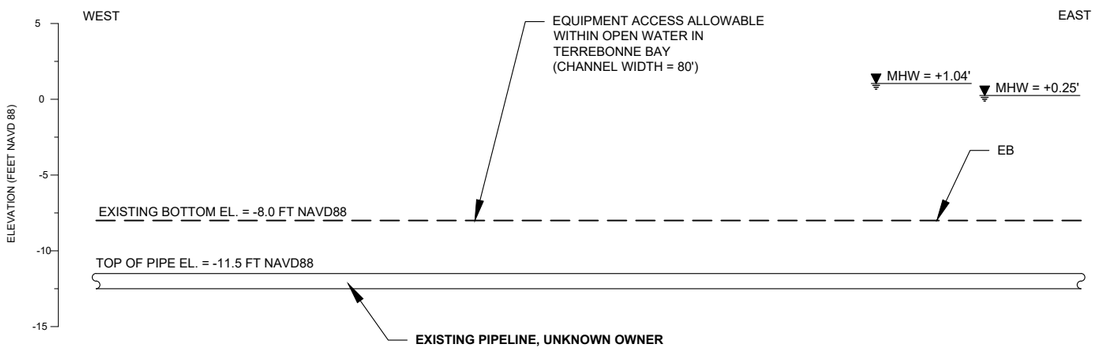

PL-11 / 8 PIPELINE CROSSING PL-11
LOCATION: SAC STA 264+90

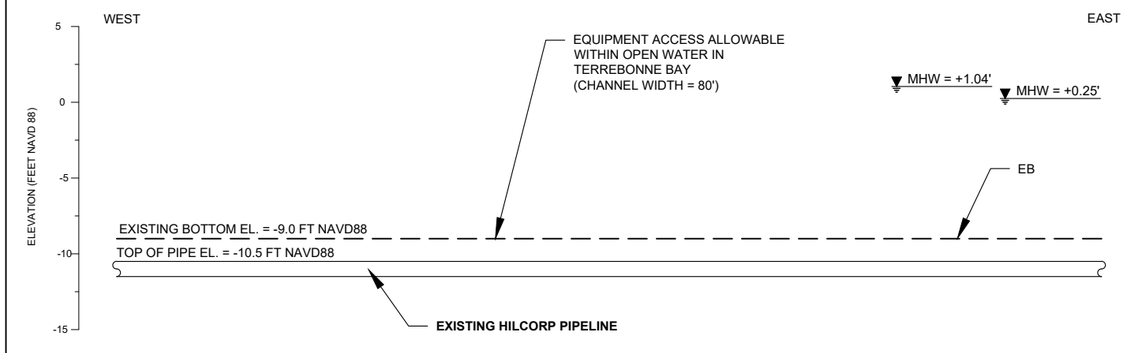

PL-12 / 8 PIPELINE CROSSING PL-12
LOCATION: SAC STA 303+02

NOTES:

1. EXISTING BATHYMETRIC SURVEY DATA WAS COLLECTED BY CHF. TOP OF PIPE ELEVATIONS WERE ALSO SURVEYED BY CHF. SHOWN BATHYMETRY IS BASED ON LIMITED SURVEY DATA AND IS TO BE USED ONLY TO INTERPRET LIKELY CONDITIONS THAT WILL NEED TO BE VERIFIED WITH CONTRACTOR SURVEYS. ADDITIONAL INFORMATION IS AVAILABLE IN APPENDIX F.
2. TOP OF PIPE ELEVATIONS VARY AT EACH CROSSING, AND IN SOME CASES MULTIPLE PIPELINES MAY BE PRESENT. AS DRAWN, ALL PIPELINE CROSSINGS REPRESENT THE MOST SHALLOW TOP OF PIPE ELEVATIONS OBSERVED AT EACH PIPELINE CROSSING IN ORDER TO DEPICT GOVERNING CONDITIONS.
3. SOME PIPELINES WERE LOCATED SIGNIFICANTLY DEEP TO WHERE CONTACT WITH THE PROBING ROD WAS NOT POSSIBLE. IN THESE CASES, THE PRESENCE OF PIPELINES WERE DETECTED BY SIGNAL ONLY AND TOP OF PIPE ELEVATION WAS GIVEN AS < 15 FT NAVD88.
4. CONTRACTOR MAY BE REQUIRED TO INSTALL PONTOONS AND/OR FLOATHOSE FOR DREDGE PIPE CROSSING OVER EXISTING PIPELINES, PENDING FURTHER COORDINATION WITH PIPELINE OWNERS.

GRAPHIC SCALE FOR ALL DRAWINGS

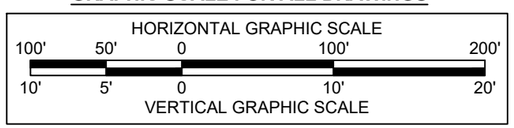

REV.	DATE	DESCRIPTION	BY

COASTAL PROTECTION AND RESTORATION AUTHORITY
150 TERRACE AVENUE
BATON ROUGE, LOUISIANA 70802

PIPELINE CROSSINGS

DESIGNED BY: JACQUES BOUDREAUX, P.E. - 0041685
APPROVED BY: DAIN GILLEN, P.E.

ISLAND ROAD MARSH CREATION AND NOURISHMENT PROJECT

STATE PROJECT NUMBER: TE-0117
DRAWN BY: SHANE FAUST

DATE: SEPTEMBER 2021

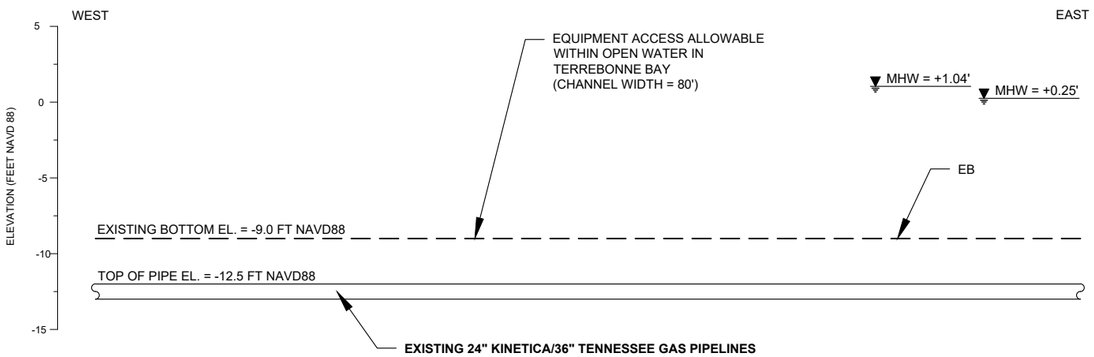

PL-13 / 8 PIPELINE CROSSING PL-13
LOCATION: SAC STA 314+56

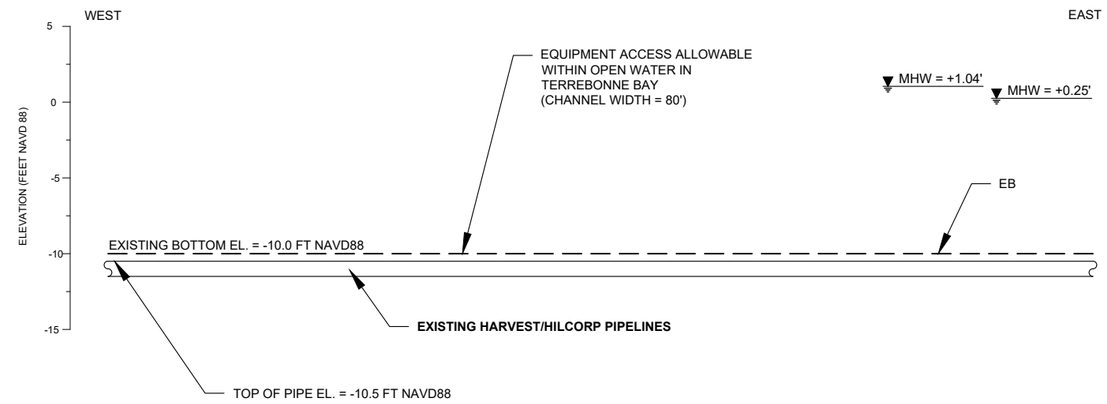

PL-14 / 9 PIPELINE CROSSING PL-14
LOCATION: SAC STA 641+56

NOTES:

1. EXISTING BATHYMETRIC SURVEY DATA WAS COLLECTED BY CHF. TOP OF PIPE ELEVATIONS WERE ALSO SURVEYED BY CHF. SHOWN BATHYMETRY IS BASED ON LIMITED SURVEY DATA AND IS TO BE USED ONLY TO INTERPRET LIKELY CONDITIONS THAT WILL NEED TO BE VERIFIED WITH CONTRACTOR SURVEYS. ADDITIONAL INFORMATION IS AVAILABLE IN APPENDIX F.
2. TOP OF PIPE ELEVATIONS VARY AT EACH CROSSING, AND IN SOME CASES MULTIPLE PIPELINES MAY BE PRESENT. AS DRAWN, ALL PIPELINE CROSSINGS REPRESENT THE MOST SHALLOW TOP OF PIPE ELEVATIONS OBSERVED AT EACH PIPELINE CROSSING IN ORDER TO DEPICT GOVERNING CONDITIONS.
3. SOME PIPELINES WERE LOCATED SIGNIFICANTLY DEEP TO WHERE CONTACT WITH THE PROBING ROD WAS NOT POSSIBLE. IN THESE CASES, THE PRESENCE OF PIPELINES WERE DETECTED BY SIGNAL ONLY AND TOP OF PIPE ELEVATION WAS GIVEN AS < 15 FT NAVD88.

GRAPHIC SCALE FOR ALL DRAWINGS

HORIZONTAL GRAPHIC SCALE
100' 50' 0 100' 200'
10' 5' 0 10' 20'
VERTICAL GRAPHIC SCALE

REV.	DATE	DESCRIPTION	BY

COASTAL PROTECTION AND RESTORATION AUTHORITY
150 TERRACE AVENUE
BATON ROUGE, LOUISIANA 70802

PIPELINE CROSSINGS

DESIGNED BY: JACQUES BOUDREAUX, P.E. - 0041685
APPROVED BY: DAIN GILLEN, P.E.

ISLAND ROAD MARSH CREATION AND NOURISHMENT PROJECT

STATE PROJECT NUMBER: TE-0117
DRAWN BY: SHANE FAUST

DATE: SEPTEMBER 2021

SHEET 17 OF 25

SOIL BORING COORDINATES

POINT	NORTHING	EASTING	DEPTH
B-2	331,449.95	3,558,616.01	50'
B-3	331,115.84	3,551,799.04	30'
B-4	328,038.10	3,556,280.16	30'
B-5	324,905.53	3,552,092.87	30'
B-8	329,217.92	3,553,477.58	60'
B-9	329,699.75	3,552,735.17	40'
B-10	327,087.11	3,551,567.96	40'
B-11	327,193.55	3,552,699.88	60'
B-12	327,283.99	3,554,458.09	60'
B-13	326,418.55	3,552,387.13	30'
B-14	326,161.23	3,552,387.13	30'
B-15	324,503.84	3,553,638.36	30'
B-16	324,503.84	3,553,638.36	60'

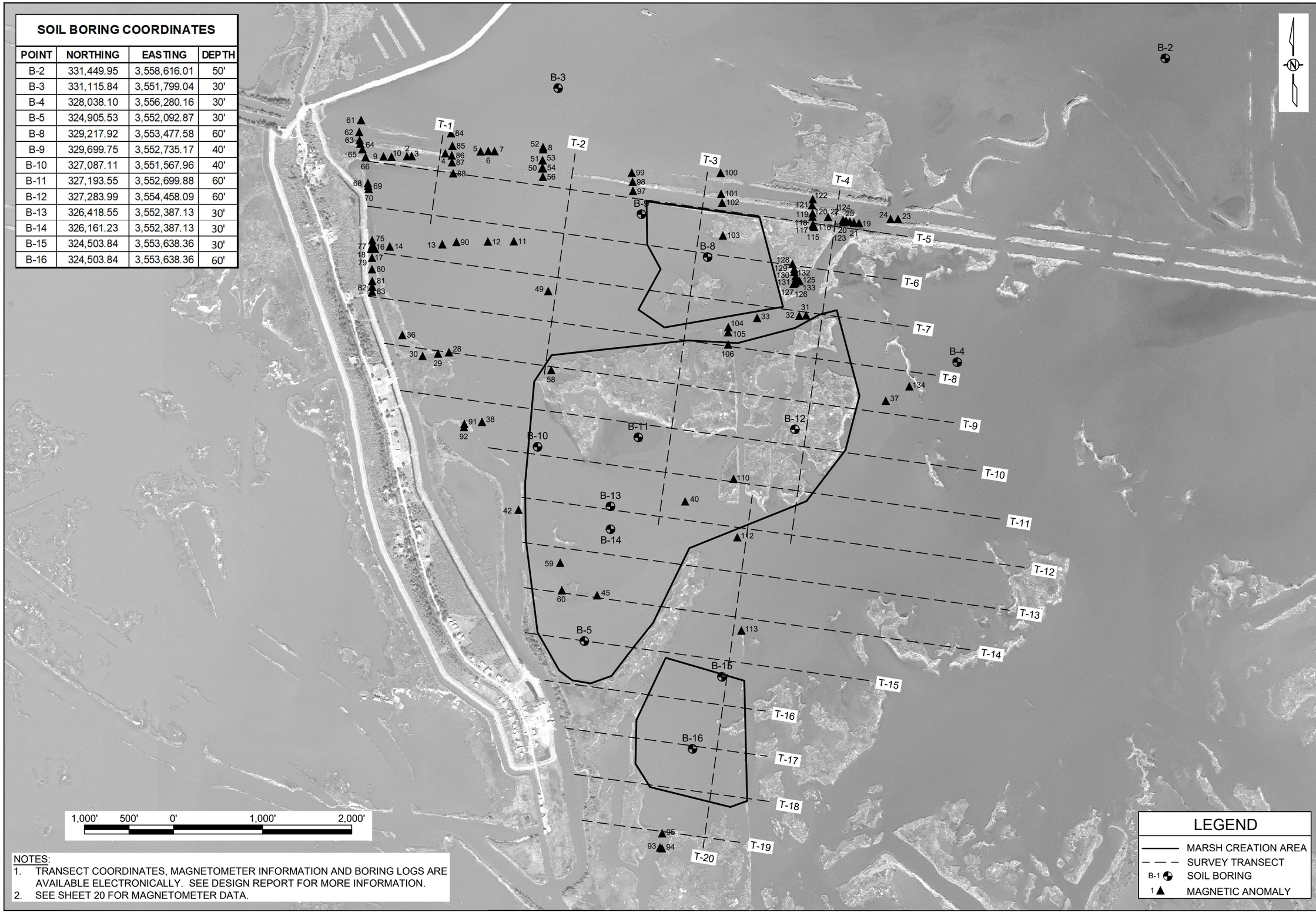

NOTES:
1. TRANSECT COORDINATES, MAGNETOMETER INFORMATION AND BORING LOGS ARE AVAILABLE ELECTRONICALLY. SEE DESIGN REPORT FOR MORE INFORMATION.
2. SEE SHEET 20 FOR MAGNETOMETER DATA.

REV.	DATE	DESCRIPTION	BY

COASTAL PROTECTION AND RESTORATION AUTHORITY
150 TERRACE AVENUE
BATON ROUGE, LOUISIANA 70802

DESIGN SURVEY AND DATA COLLECTION LAYOUT

DESIGNED BY: JACQUES BOUDREAUX, P.E. - 0041685
APPROVED BY: DAIN GILLEN, P.E.

ISLAND ROAD MARSH CREATION AND NOURISHMENT PROJECT

STATE PROJECT NUMBER: TE-0117
DRAWN BY: SHANE FAUST

DATE: SEPTEMBER 2021

SHEET 18 OF 25

SOIL BORING COORDINATES

POINT	NORTHING	EASTING	DEPTH
B-1	297,938.42	3,550,076.64	20'
B-2	301,093.89	3,547,282.50	20'
B-2A	299,963.63	3,548,265.41	20'
B-3	298,066.42	3,547,557.78	20'
B-4	299,442.72	3,546,512.85	20'
B-5	295,968.57	3,548,835.62	20'
B-6	298,678.74	3,551,832.79	20'
B-7	296,882.52	3,550,586.29	20'

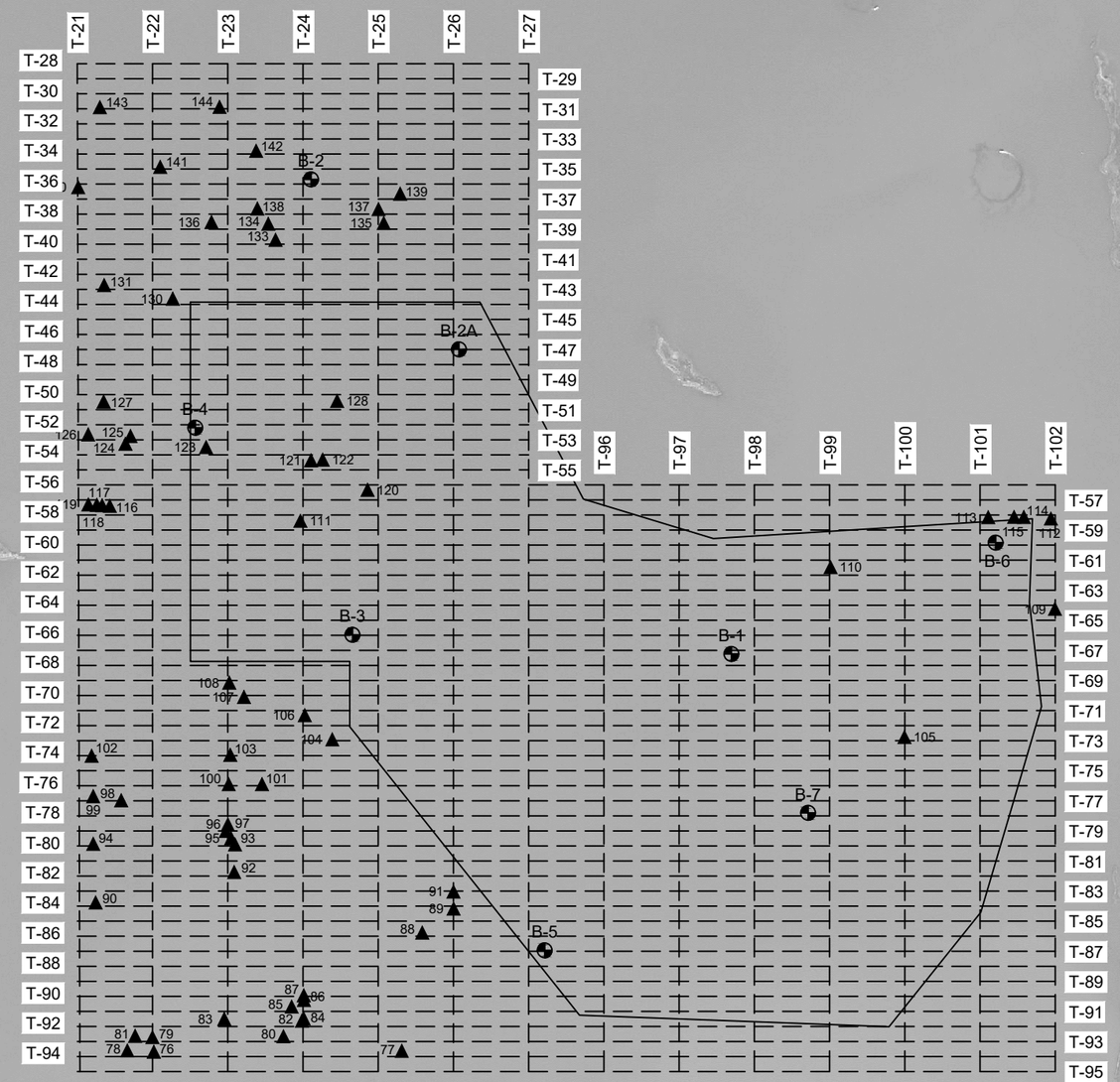

1,000' 500' 0' 1,000' 2,000'

NOTES:
1. TRANSECT COORDINATES, MAGNETOMETER INFORMATION AND BORING LOGS ARE AVAILABLE ELECTRONICALLY. SEE DESIGN REPORT FOR MORE INFORMATION.
2. SEE SHEET 20 FOR MAGNETOMETER DATA.

LEGEND

- BORROW AREA
- SURVEY TRANSECT
- B-1 SOIL BORING
- 1 MAGNETIC ANOMALY

REV.	DATE	DESCRIPTION	BY

COASTAL PROTECTION AND RESTORATION AUTHORITY
150 TERRACE AVENUE
BATON ROUGE, LOUISIANA 70802

DESIGN SURVEY AND DATA COLLECTION LAYOUT

DESIGNED BY: JACQUES BOUDREAUX, P.E. - 0041685

APPROVED BY: DAIN GILLEN, P.E.

ISLAND ROAD MARSH CREATION AND NOURISHMENT PROJECT

STATE PROJECT NUMBER: TE-0117

DRAWN BY: SHANE FAUST

DATE: SEPTEMBER 2021

SHEET 19 OF 25

MARSH CREATION AREA MAGNETOMETER DATA

ANOMALLY	NORTHING	EASTING	AMPLITUDE
2	330,339.00	3,550,101.00	3058
3	330,341.00	3,550,154.00	952
4	330,373.00	3,550,532.00	4358
5	330,394.00	3,550,928.00	3070
6	330,398.00	3,551,014.00	1168
7	330,396.00	3,551,085.00	2671
8	330,418.00	3,551,631.00	958
9	330,336.29	3,549,838.12	309
10	330,332.29	3,549,928.12	361
11	329,384.29	3,551,301.12	84
12	329,381.29	3,551,010.12	199
13	329,350.29	3,550,498.12	227
14	329,325.29	3,549,909.12	52
16	329,306.27	3,549,738.12	101
17	329,303.27	3,549,727.12	100
18	329,298.27	3,549,701.12	53
19	329,588.00	3,555,178.00	5568
20	329,616.00	3,555,032.00	6071
21	329,594.00	3,555,120.00	870
22	329,657.29	3,554,830.12	464
23	329,634.00	3,555,615.00	531
24	329,634.29	3,555,531.12	276
25	329,605.29	3,555,073.12	312
28	328,137.27	3,550,573.12	89
29	328,122.29	3,550,450.12	363
30	328,097.00	3,550,277.00	670
31	328,553.00	3,554,583.00	1357
32	328,547.00	3,555,506.00	702
33	328,523.29	3,554,033.12	97
36	328,331.29	3,550,049.12	148
37	327,592.29	3,555,477.12	61
38	327,356.00	3,550,944.00	571
40	326,462.29	3,553,225.12	106
42	326,368.29	3,551,354.12	171
45	325,408.29	3,552,236.12	58
49	328,824.87	3,551,687.22	143
50	330,203.84	3,551,617.99	2425
51	330,295.12	3,551,623.83	1928
52	330,441.27	3,551,619.82	2568
53	330,294.87	3,551,623.97	1648
54	330,204.52	3,551,628.02	1742
55	330,108.74	3,551,627.57	389
56	330,106.03	3,551,630.69	504
58	327,937.50	3,551,721.72	53
59	325,773.61	3,551,821.97	67
60	325,468.67	3,551,841.43	752
61	330,742.09	3,549,587.59	1005
62	330,607.48	3,549,568.47	1601
63	330,521.90	3,549,572.90	1343
64	330,480.76	3,549,577.19	319
66	330,328.08	3,549,636.95	113
68	3,303,257.00	3,549,662.83	147

MARSH CREATION AREA MAGNETOMETER DATA

ANOMALLY	NORTHING	EASTING	AMPLITUDE
69	330,006.40	3,549,666.69	92
70	329,971.81	3,549,671.34	118
75	329,395.19	3,549,710.04	461
77	329,333.55	3,549,709.92	106
79	329,198.25	3,549,710.16	705
80	329,069.56	3,549,708.60	124
81	328,937.27	3,549,711.01	91
82	328,874.43	3,549,711.36	253
83	328,818.09	3,549,710.30	278
84	330,596.14	3,550,596.02	1142
85	330,452.83	3,550,609.42	2003
86	330,349.14	3,550,606.99	1840
87	330,267.78	3,550,610.06	1013
88	330,146.92	3,550,620.58	361
90	329,374.71	3,550,656.91	58
91	327,332.56	3,550,745.91	275
92	327,296.75	3,550,742.32	276
93	322,496.81	3,552,928.80	753
94	322,486.20	3,552,951.03	485
95	322,734.70	3,552,966.84	102
97	329,949.43	3,552,639.13	466
98	330,054.48	3,552,636.43	1401
99	330,151.87	3,552,628.50	1012
100	330,150.34	3,553,622.96	817
101	329,917.75	3,553,632.05	675
102	329,815.88	3,553,640.88	741
103	329,448.62	3,553,648.60	135
104	328,418.65	3,553,709.80	573
105	328,362.05	3,553,708.19	83
106	328,224.58	3,553,707.09	54
110	326,714.70	3,553,769.24	55
112	326,055.96	3,553,812.57	958
113	325,011.45	3,553,856.49	273
115	329,545.47	3,554,671.03	67
116	329,563.23	3,554,663.61	259
117	329,570.92	3,554,660.95	286
118	329,574.38	3,554,660.38	263
119	329,665.33	3,554,655.41	1640
120	329,699.06	3,554,655.15	257
121	329,789.41	3,554,647.55	1442
122	329,851.48	3,554,655.54	1343
123	329,596.74	3,555,002.51	1189
124	329,621.86	3,555,001.79	667
125	328,937.60	3,554,508.96	59
126	328,917.19	3,554,462.96	694
127	328,907.23	3,554,443.74	191
128	329,128.52	3,554,430.81	61
131	328,990.99	3,554,465.61	216
132	328,973.01	3,554,473.29	454
133	328,935.91	3,554,490.99	281
134	327,754.27	3,555,742.41	51

BORROW AREA MAGNETOMETER DATA

ANOMALLY	NORTHING	EASTING	AMPLITUDE
76	295,282.65	3,546,237.74	67
77	295,289.20	3,547,885.70	111
78	295,291.00	3,546,061.91	234
79	295,379.54	3,546,228.50	78
80	295,385.09	3,547,099.15	328
81	295,388.14	3,546,113.71	404
82	295,489.21	3,547,222.21	52
83	295,501.28	3,546,706.23	571
84	295,503.32	3,547,233.94	228
85	295,582.58	3,547,153.79	1830
86	295,627.54	3,547,234.89	3410
87	295,657.72	3,547,234.37	52
88	296,074.87	3,548,021.91	190
89	296,234.89	3,548,229.86	224
90	296,274.88	3,545,851.06	241
91	296,347.79	3,548,229.07	95
92	296,477.43	3,546,772.04	288
93	296,660.68	3,546,777.71	472
94	296,664.99	3,545,834.95	657
95	296,701.50	3,546,752.03	422
96	296,751.41	3,546,717.33	1178
97	296,793.77	3,546,729.75	335
98	296,953.81	3,546,020.98	1703
99	296,981.48	3,545,834.77	240
100	297,061.29	3,546,735.51	382
101	297,061.55	3,546,956.59	344
102	297,249.70	3,545,824.39	80
103	297,256.62	3,546,746.18	798
104	297,360.16	3,547,423.45	244
105	297,375.84	3,551,226.63	134
106	297,520.71	3,547,240.90	74
107	297,642.53	3,546,836.79	8683
108	297,737.36	3,546,739.19	156
109	298,228.08	3,552,226.82	65

BORROW AREA MAGNETOMETER DATA

ANOMALLY	NORTHING	EASTING	AMPLITUDE
110	298,504.74	3,550,735.65	274
111	298,812.78	3,547,211.39	408
112	298,827.90	3,552,199.93	1630
113	298,837.22	3,551,783.43	2918
114	298,838.20	3,552,020.12	1727
115	298,838.92	3,551,955.18	1361
116	298,910.89	3,545,945.26	799
117	298,915.35	3,545,894.00	1213
118	298,917.93	3,545,859.30	828
119	298,920.40	3,545,802.63	2901
120	299,019.00	3,547,658.35	50
121	299,215.16	3,547,282.14	75
122	299,219.00	3,547,359.78	151
123	299,302.86	3,546,584.53	147
124	299,324.27	3,546,049.27	110
125	299,375.48	3,546,083.00	60
126	299,386.56	3,545,801.40	92
127	299,604.62	3,545,904.12	97
128	299,610.10	3,547,455.61	62
130	300,290.02	3,546,363.40	82
131	300,379.10	3,545,907.64	101
133	300,679.62	3,547,046.76	52
134	300,786.48	3,546,998.79	66
135	300,791.51	3,547,765.97	247
136	300,798.10	3,546,621.01	117
137	300,884.02	3,547,731.22	92
138	300,887.57	3,546,926.13	85
139	300,986.37	3,547,875.16	129
140	301,029.67	3,545,735.38	241
141	301,164.57	3,546,280.30	158
142	301,271.97	3,546,918.03	109
143	301,561.65	3,545,879.52	71
144	301,563.50	3,546,674.70	356

REV.	DATE	DESCRIPTION	BY

COASTAL PROTECTION AND RESTORATION AUTHORITY
150 TERRACE AVENUE
BATON ROUGE, LOUISIANA 70802

MAGNETOMETER DATA

DESIGNED BY: JACQUES BOUDREAUX, P.E. - 0041685

APPROVED BY: DAIN GILLEN, P.E.

ISLAND ROAD MARSH CREATION AND NOURISHMENT PROJECT

STATE PROJECT NUMBER: TE-0117

DRAWN BY: SHANE FAUST

DATE: SEPTEMBER 2021

SHEET 20 OF 25

SETTLEMENT PLATE COORDINATES		
POINT	NORTHING	EASTING
SP-1	329,700.75	3,552,793.92
SP-2	328,806.16	3,553,155.51
SP-3	327,962.02	3,552,159.76
SP-4	328,260.47	3,553,670.75
SP-5	328,046.50	3,554,899.30
SP-6	326,400.44	3,554,396.08
SP-7	326,944.70	3,551,639.22
SP-8	325,812.32	3,551,465.99
SP-9	324,953.47	3,551,923.09
SP-10	324,588.97	3,553,448.49
SP-11	323,428.89	3,552,903.69

INSTRUMENTED SETTLEMENT PLATE COORDINATES		
POINT	NORTHING	EASTING
ISP-1	329,217.92	3,553,477.58
ISP-2	327,193.55	3,552,699.88
ISP-3	327,283.99	3,554,458.09
ISP-4	326,161.23	3,552,387.13
ISP-5	323,694.30	3,553,308.57

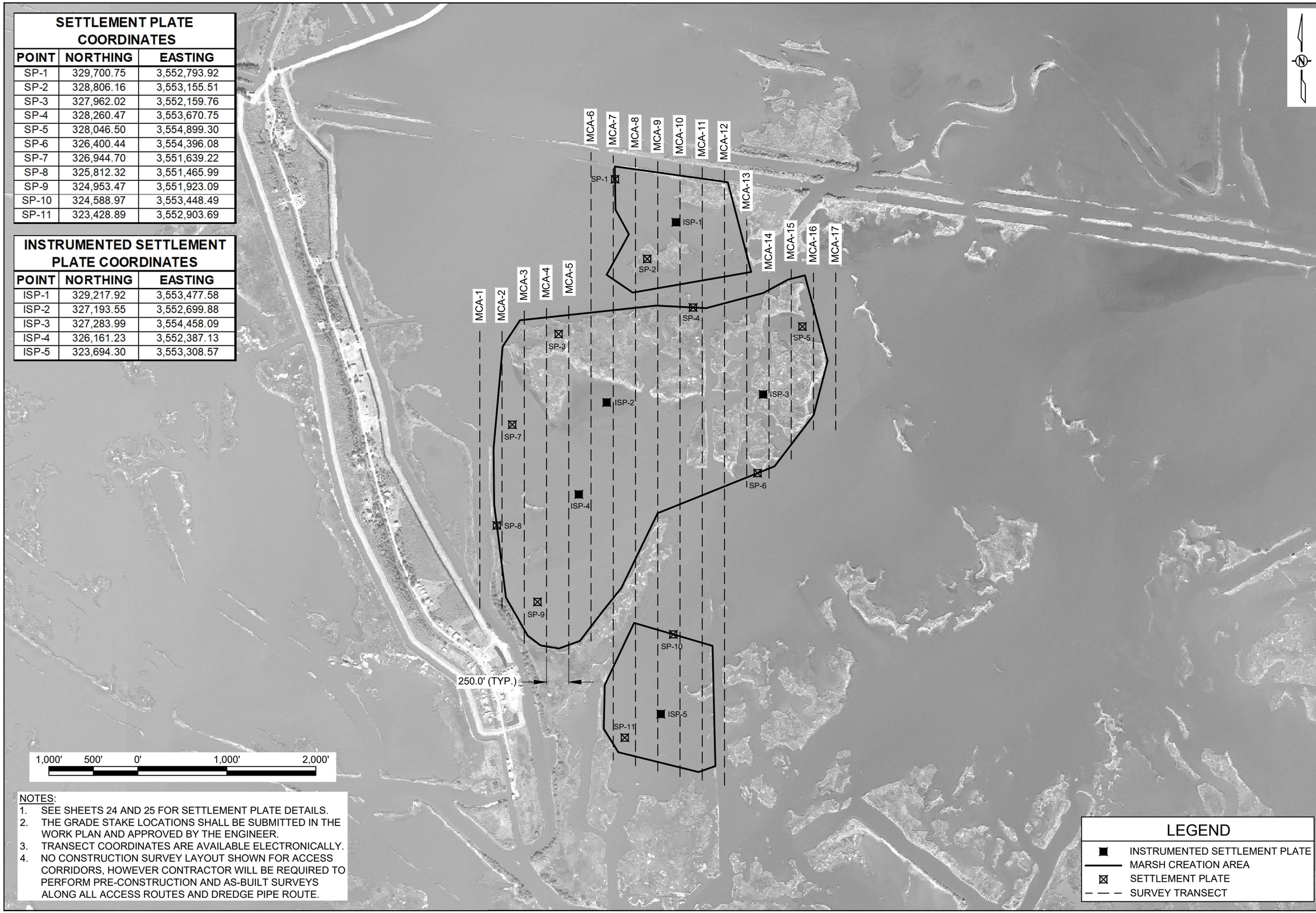

NOTES:
1. SEE SHEETS 24 AND 25 FOR SETTLEMENT PLATE DETAILS.
2. THE GRADE STAKE LOCATIONS SHALL BE SUBMITTED IN THE WORK PLAN AND APPROVED BY THE ENGINEER.
3. TRANSECT COORDINATES ARE AVAILABLE ELECTRONICALLY.
4. NO CONSTRUCTION SURVEY LAYOUT SHOWN FOR ACCESS CORRIDORS, HOWEVER CONTRACTOR WILL BE REQUIRED TO PERFORM PRE-CONSTRUCTION AND AS-BUILT SURVEYS ALONG ALL ACCESS ROUTES AND DREDGE PIPE ROUTE.

REV.	DATE	DESCRIPTION	BY

COASTAL PROTECTION AND RESTORATION AUTHORITY
150 TERRACE AVENUE
BATON ROUGE, LOUISIANA 70802

MARSH CREATION AREA CONSTRUCTION SURVEY AND SETTLEMENT PLATE LAYOUT

DESIGNED BY: JACQUES BOUDREAUX, P.E.
APPROVED BY: DAIN GILLEN, P.E.

ISLAND ROAD MARSH CREATION AND NOURISHMENT PROJECT

STATE PROJECT NUMBER: TE-0117
DRAWN BY: SHANE FAUST

DATE: SEPTEMBER 2021

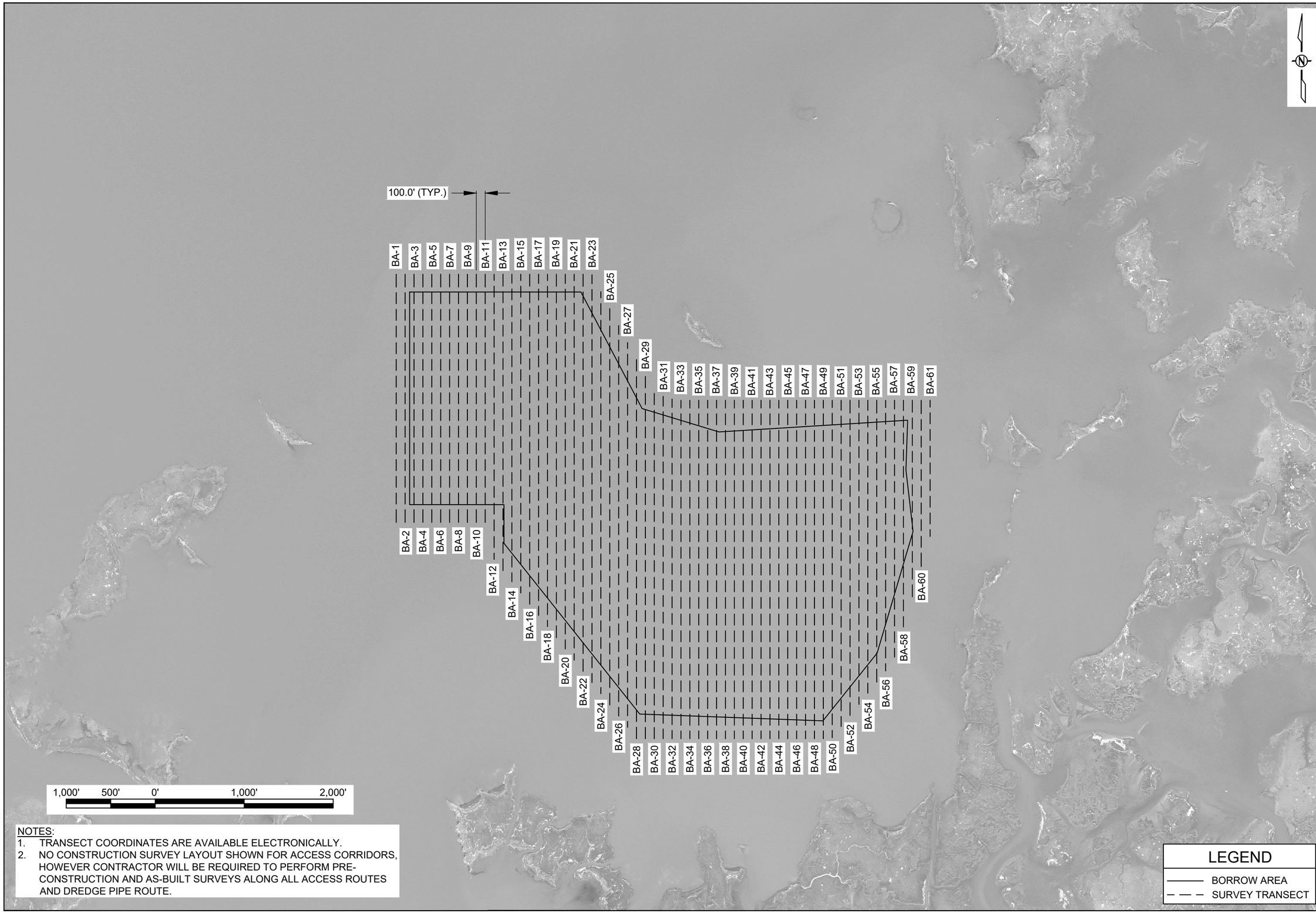

NOTES:
1. TRANSECT COORDINATES ARE AVAILABLE ELECTRONICALLY.
2. NO CONSTRUCTION SURVEY LAYOUT SHOWN FOR ACCESS CORRIDORS, HOWEVER CONTRACTOR WILL BE REQUIRED TO PERFORM PRE-CONSTRUCTION AND AS-BUILT SURVEYS ALONG ALL ACCESS ROUTES AND DREDGE PIPE ROUTE.

REV.	DATE	DESCRIPTION	BY

COASTAL PROTECTION AND RESTORATION AUTHORITY
150 TERRACE AVENUE
BATON ROUGE, LOUISIANA 70802

BORROW AREA
CONSTRUCTION SURVEY LAYOUT

DESIGNED BY: JACQUES BOUDREAUX, P.E.
APPROVED BY: DAIN GILLEN, P.E.

ISLAND ROAD
MARSH CREATION AND
NOURISHMENT PROJECT

STATE PROJECT NUMBER: TE-0117
DRAWN BY: SHANE FAUST

DATE: SEPTEMBER 2021

SHEET 22 OF 25

GRADE STAKES			
MCA	CMF ELEVATION (FT NAVD88)	CONSTRUCTION TOLERANCE (FT)	TOTAL NO. OF GRADE STAKES
1	+3.0	+/-0.25	4
2	+3.0	+/-0.25	16
3	+3.0	+/-0.25	4

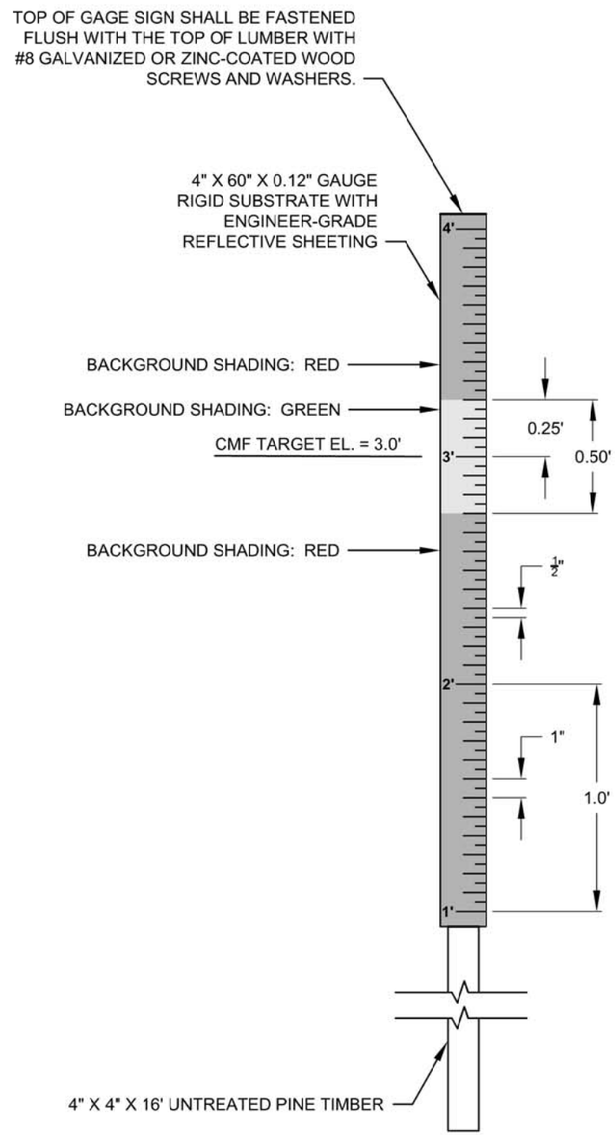

GRADE STAKE DETAIL - MCA1 MCA 2 & MCA3

NTS

NOTE:
SEE SECTION TS-220 OF THE SPECIFICATIONS FOR GRADE STAKES.

REV.	DATE	DESCRIPTION	BY

COASTAL PROTECTION AND RESTORATION AUTHORITY
150 TERRACE AVENUE
BATON ROUGE, LOUISIANA 70802

GRADE STAKE DETAILS

DESIGNED BY: JACQUES BOUDREAUX, P.E. - 0041685
APPROVED BY: DAIN GILLEN, P.E.

ISLAND ROAD MARSH CREATION AND NOURISHMENT PROJECT

STATE PROJECT NUMBER: TE-0117
DRAWN BY: SHANE FAUST

DATE: SEPTEMBER 2021

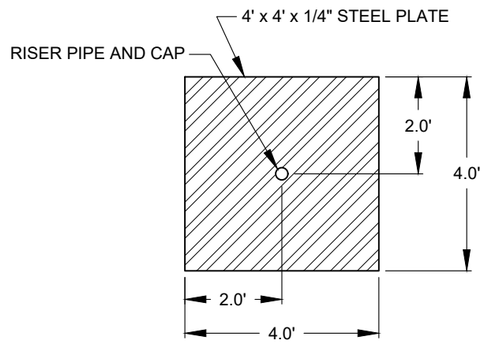

PLAN VIEW

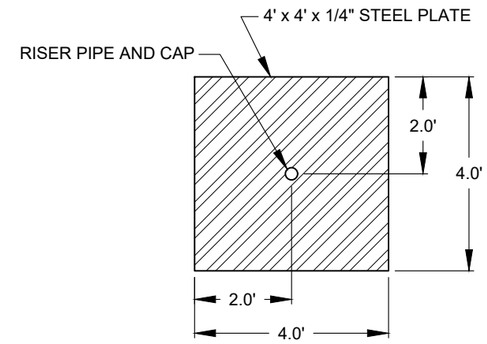

PLAN VIEW

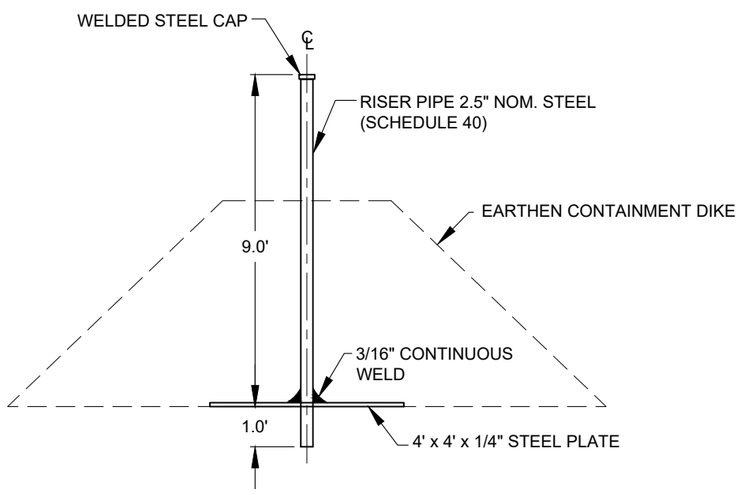

PROFILE VIEW

EARTHEN CONTAINMENT DIKE SETTLEMENT PLATE
NTS

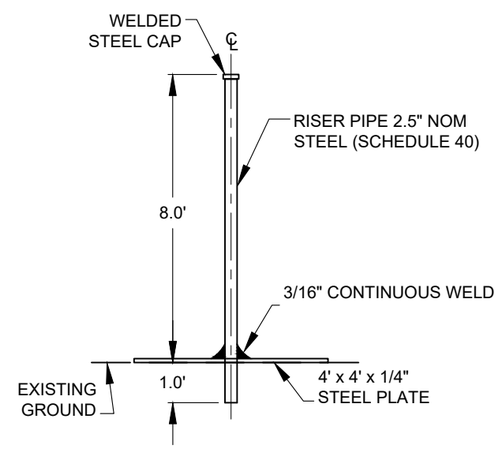

PROFILE VIEW

MARSH CREATION AREA SETTLEMENT PLATE
NTS

NOTE:
CONTRACTOR TO DRIVE STAND PIPE BELOW GRADE TO THE DEPTH DETERMINED BY THE ENGINEER IN THE FIELD.

REV.	DATE	DESCRIPTION	BY

COASTAL PROTECTION AND RESTORATION AUTHORITY
150 TERRACE AVENUE
BATON ROUGE, LOUISIANA 70802

SETTLEMENT PLATE DETAILS

DESIGNED BY: JACQUES BOUDREAUX, P.E.
APPROVED BY: DAIN GILLEN, P.E.

ISLAND ROAD MARSH CREATION AND NOURISHMENT PROJECT

STATE PROJECT NUMBER: TE-0117
DRAWN BY: SHANE FAUST

DATE: SEPTEMBER 2021

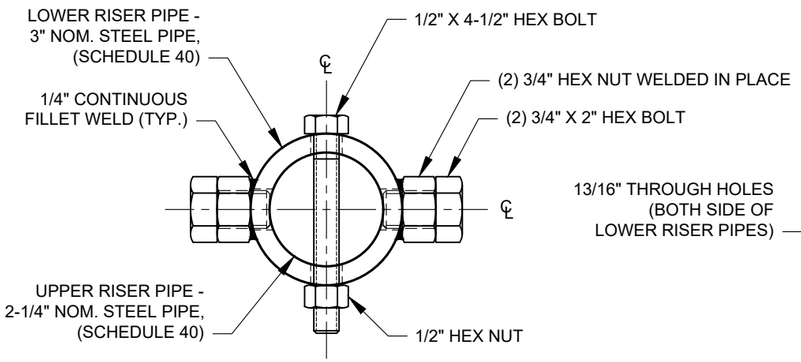

A/20 RISER PIPE DETAIL
NTS

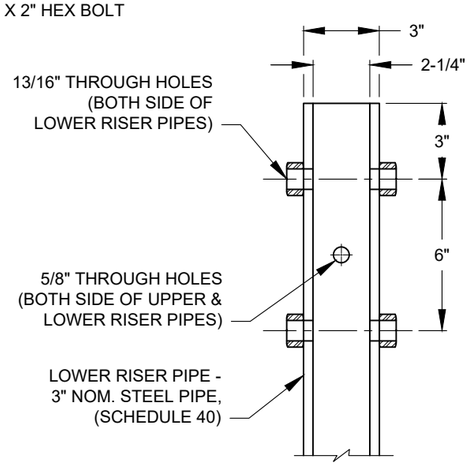

B/20 RISER PIPE SECTION
NTS

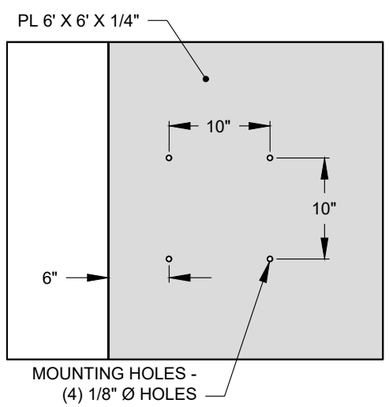

C/20 PRESSURE PLATE DETAIL
NTS

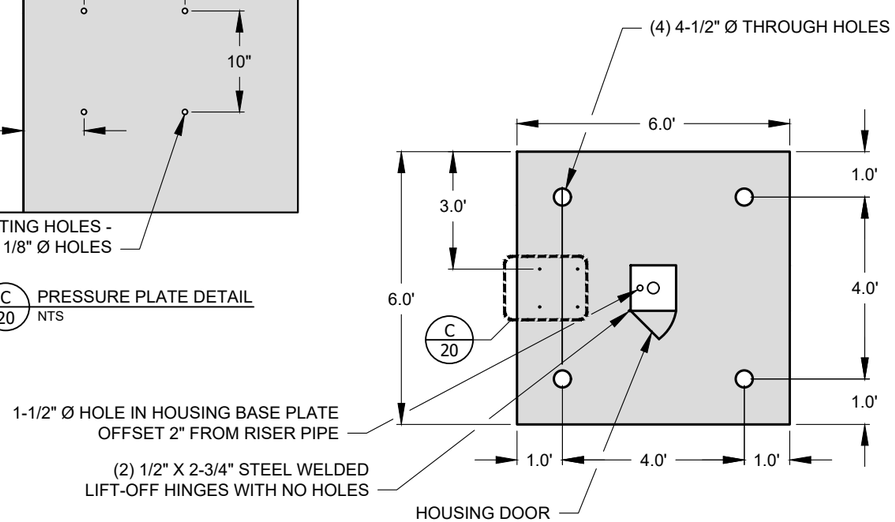

PRESSURE PLATE PLAN VIEW
NTS

NOTE:
CONTRACTOR TO DRIVE STAND PIPE BELOW GRADE TO THE DEPTH DETERMINED BY THE ENGINEER IN THE FIELD.

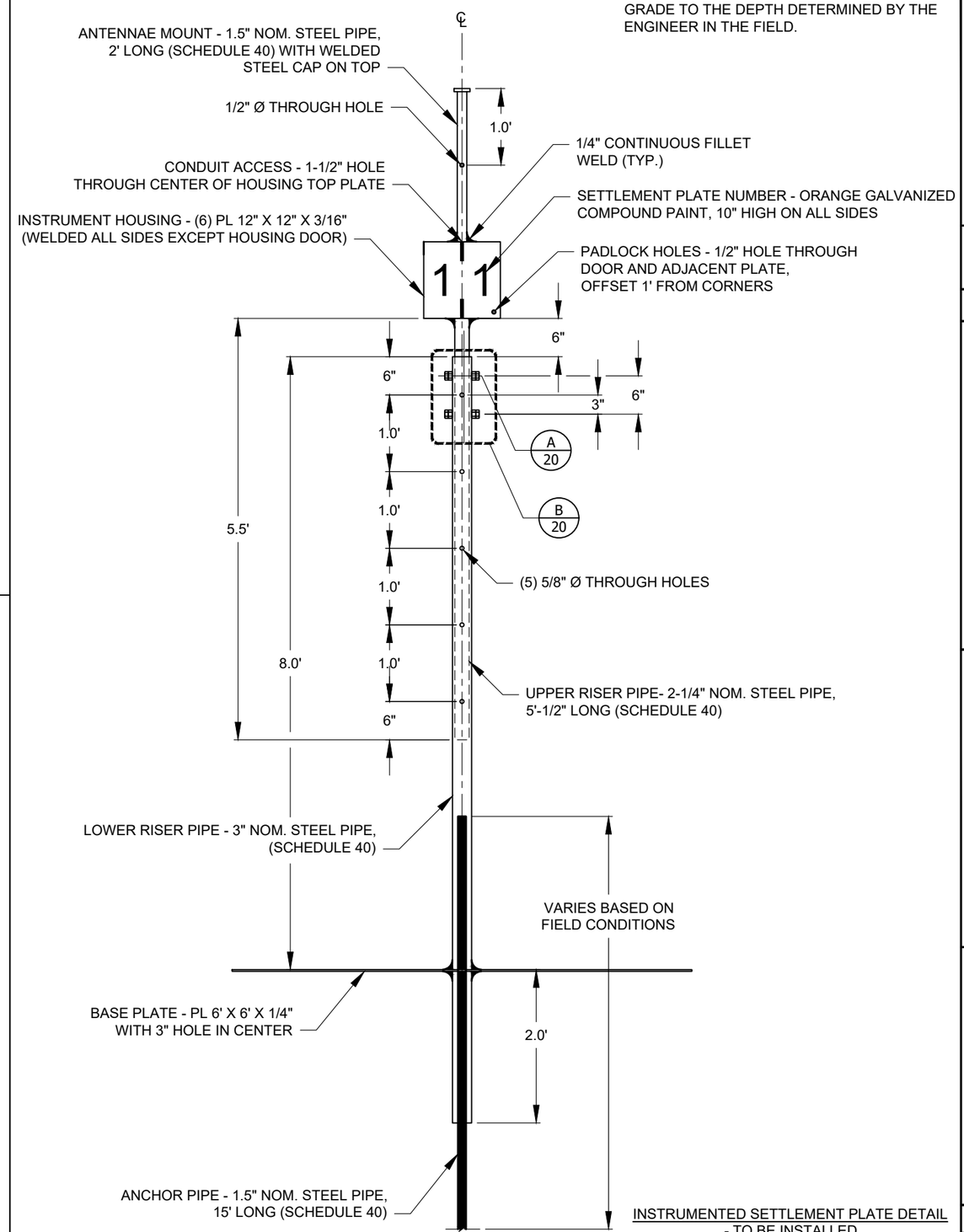

INSTRUMENTED SETTLEMENT PLATE DETAIL - TO BE INSTALLED
NTS

REV.	DATE	DESCRIPTION	BY
A	7/14/20	REVISED THE ISP TO BE ADJUSTABLE	SF

COASTAL PROTECTION AND RESTORATION AUTHORITY
150 TERRACE AVENUE
BATON ROUGE, LOUISIANA 70802

INSTRUMENTED SETTLEMENT PLATE DEATILS

DESIGNED BY: JACQUES BOUDREAUX, P.E. - 0041685
APPROVED BY: DAIN GILLEN, P.E.

ISLAND ROAD MARSH CREATION AND NOURISHMENT PROJECT

STATE PROJECT NUMBER: TE-0117
DRAWN BY: SHANE FAUST

DATE: SEPTEMBER 2021

SHEET 25 OF 25