LIST OF PARTS NOT DETAILED

MK NO.	QTY.	DESCRIPTION	MAT'L
1-1	3	HYDRAULIC CYLINDER: 12" BORE X 14' STROKE, & 5 1/2" DIA. PISTON ROD NFPA STYLE ME5 MOUNT RATED FOR 3,000 PSI CYLINDER PRESSURE. ROD TO BE BORED FOR ITEM MK-4.	SEE SPEC
1-2	1	HYDRAULIC POWER SYSTEM: TWO 15HP FIXED DISPLACEMENT PUMPS RATED FOR 8.4 GPM AT 2500 PSIG, NOMINAL 140 GAL. RESERVOIR, DIRECTIONAL VALVES, FLOW CONTROL VALVES AND FILTERS.	COMM.
1-3	2	ELASTOMER BLADDER W/TANK: NOMINAL WORKING CAPACITY OF 40 GALLONS SIMILAR AND EQUAL TO THAT MFG. BY GEER HYDRAULICS KLEENVENT MODEL 800878.	COMM.
1-4	3	POSITION TRANSDUCER: MAGNETOSTRICTIVE POSITION SENSING DEVICE. SIMILAR AND EQUAL TO THAT MFG. BY MTS SYSTEMS CORPS. MODEL TEMPOSONICS II	COMM.
1-5	3	PILLOW BLOCK BEARING: SPLIT TYPE CAST STEEL PILLOW BLOCK WITH 4 BOLT HEAD AND BASE AND HIGH LEADED BRONZE SLEEVE BEARING. BORED 5 9/16". SIMILAR AND EQUAL TO THAT MFG. BY LINK-BELT BEARING DIV. MODEL 2K1487Z.	COMM.
1-6	6	BALL VALVE: 3/4"W/SOCKET WELDED ENDS.	300 SERIES S.S.
1-7	6	UNION: 3/4"W/SOCKET WELDED ENDS.	300 SERIES S.S.
1-8	2	UNION: 3/4"W/NPT ENDS.	STEEL
1-9	3	COUNTER BALANCE VALVE: NOMINAL 3/4"FLOW PORTS.	COMM.
1-10	91	U-BOLTS: 1/4" DIAMETER, SIZED AS REQUIRED, SUPPLIED WITH SS NUTS AND LOCK WASHERS.	300 SERIES S.S.
1-11	24	BAND CLAMP: 3/4"WIDE X 0.030" THK. BAND-IT BRAND OR EQUAL.	300 SERIES S.S.
1-12	8	HYDRAULIC HOSE: 1/2" I.D. REINFORCE HOSE W/MINIMUM PRESSURE RATING OF 3000 PSI, LENGTH AS REQ'D.	COMM.
1-13	28	9/16"DIA. X 6" LG. X 1 1/2"LEG W/NUT & WASHER.	300 SERIES S.S.
1-14	16	CYLINDER BOLTS: 2" DIA. X LGT. AS REQ'D. W/NUT & LOCK WASHER.	300 SERIES S.S.
1-15	2	PIPE SUPPORT: TWO HOLE TYPE MOUNT WITH 3/8 "DIA. 2" MIN. PENETRATION LGT. CONCRETE EXPANSION ANCHORS.	GALV. STEEL
1-16	1	HOSE: 3/4" I.D. WIRE REINFORCE HOSE DESIGNED FOR VACUUM USE AND PRESSURE UP TO A MIN. 25 PSI LENGTH AS REQUIRED.	COMM.
1-17	16	CONCRETE ANCHOR: 1" DIA. X 18" LG. X 5" LEG W/NUTS & WASHERS AS SHOWN	300 SERIES S.S.
1-18	3	I-BEAM: W8X28X21" LG. DRILL FOR MK 1-5.	HOT DIPPED GALV. STEEL
1-19	3	BALL VALVE :3/4 "INLET & EXIT PORTS	300 SERIES S.S.

NOTES:

1. MISC. MINOR COMPONENTS SUCH AS PIPE FITTINGS & CONNECTORS NOT LISTED BUT REQ,D. TO PROVIDE COMPLETE INSTALLATION SHALL BE PROVIDED BY THE CONTRACTOR UNDER THIS CONTRACT.

2. MAJOR COMPONENTS - HYDRAULIC CYLINDERS, SLUICE GATES AND HYDRAULIC SYSTEM SHALL BE SUPPLIED BY THE SLUICE GATE SUPPLIER. SLUICE GATE SHALL BE AS MANUFACTURED BY JASH ENGINEERING LTD., RODNEY HUNT OR APPROVED EQUAL.
3. ALL FASTENERS SHALL BE INSTALLED WITH ANTI SEIZE LUBRICANT.

NOTES:

1. WALKWAY BRIDGE NOT SHOWN.

2. EQUIPMENT ROOM NOT SHOWN,

3. FENCE AND GUARDRAIL NOT SHOWN,

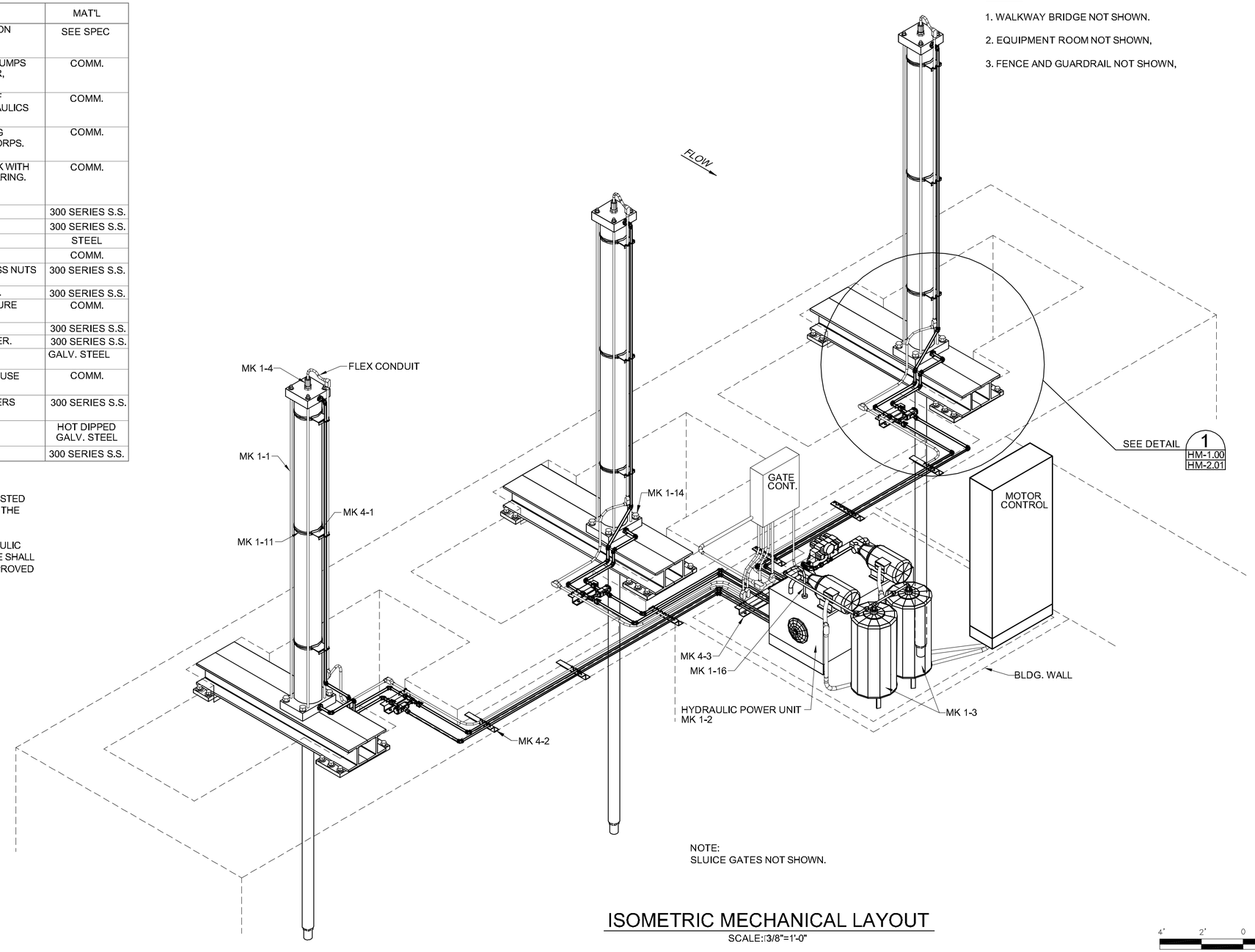

NOTE:
SLUICE GATES NOT SHOWN.

ISOMETRIC MECHANICAL LAYOUT

SCALE:3/8"=1'-0"

4' 2' 0 4'

SCALE:3/8"=1'-0"

REV.	DATE	DESCRIPTION	BY

URS
3500 N. Causeway Blvd., Suite 900
Metairie, Louisiana 70002
(504) 837-6326

LOUISIANA COASTAL PROTECTION AND RESTORATION AUTHORITY
COASTAL ENGINEERING DIVISION
450 LAUREL STREET
BATON ROUGE, LOUISIANA 70802

MISSISSIPPI RIVER REINTRODUCTION INTO MAUREPAS SWAMP
ST. JOHN THE BAPTIST PARISH, LOUISIANA

P.O.-29 URS PROJECT NUMBER: 10001801

95% SUBMITTAL

FACILITY LAYOUT PLAN

DATE: SEPTEMBER 2013

DRAWN BY: SDC III | DESIGNED BY: J.Y. | APPROVED BY: NC | SHEET HM-1.00

P:\OCPR\10001801 Final Design II\CAD\Current Drawings\Maurepas_HM-1.00_Facility Layout Plan.dwg, Oct 22, 2013 - 1:22:29PM, silas_cunningham

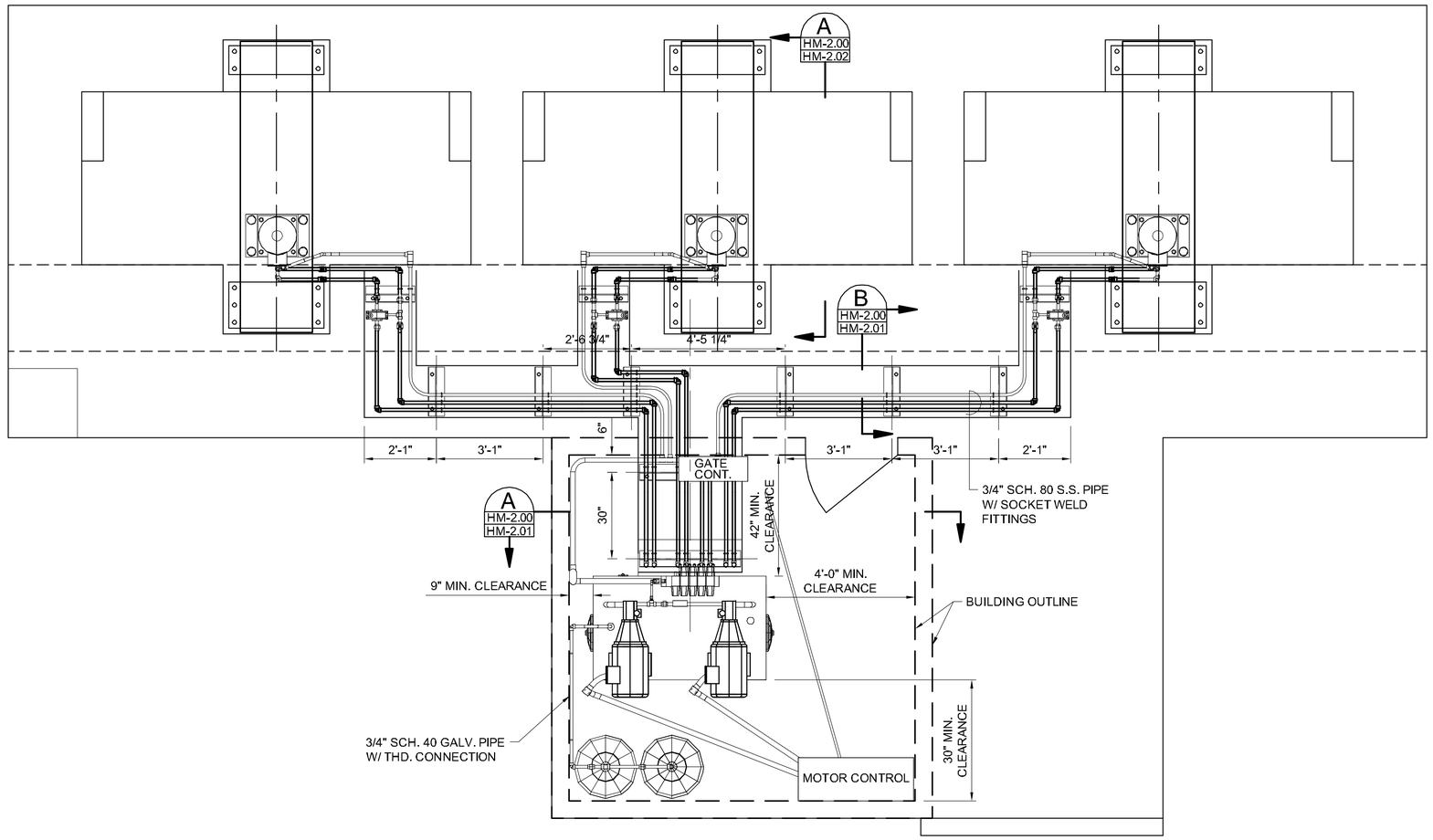

PLAN

SCALE: 1/2" =1'-0"

2' 1' 0 2'

SCALE: 1/2"= 1'-0"

REV.	DATE	DESCRIPTION	BY

URS
3500 N. Causeway Blvd., Suite 900
Metairie, Louisiana 70002
(504) 837-6326

LOUISIANA COASTAL PROTECTION AND RESTORATION AUTHORITY
COASTAL ENGINEERING DIVISION
450 LAUREL STREET
BATON ROUGE, LOUISIANA 70802

DRAWN BY: SDC III
DESIGNED BY: JAY YERUBANDI

MISSISSIPPI RIVER REINTRODUCTION INTO MAUREPAS SWAMP
ST. JOHN THE BAPTIST PARISH, LOUISIANA

P.O.-29 URS PROJECT NUMBER: 10001801

95% SUBMITTAL

APPROVED BY: RYAN KOENIG

MECHANICAL PLAN VIEW

DATE: SEPTEMBER, 2013

SHEET HM-2.00

P:\GCPR\10001801 Final Design II\CAD\Current Drawings\Maurepas_HM-2.00_Mechanical Plan View.dwg, Oct 22, 2013 - 1:21:59PM, silas_cunningham

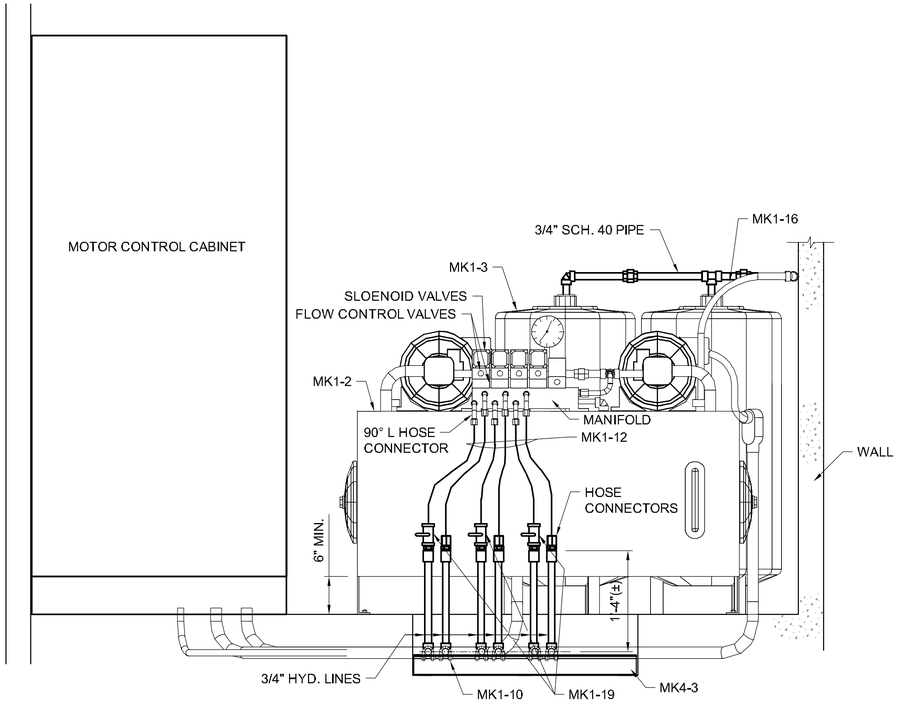

SECTION A HM-2.00 HM-2.01

SCALE: 1"=1'-0"

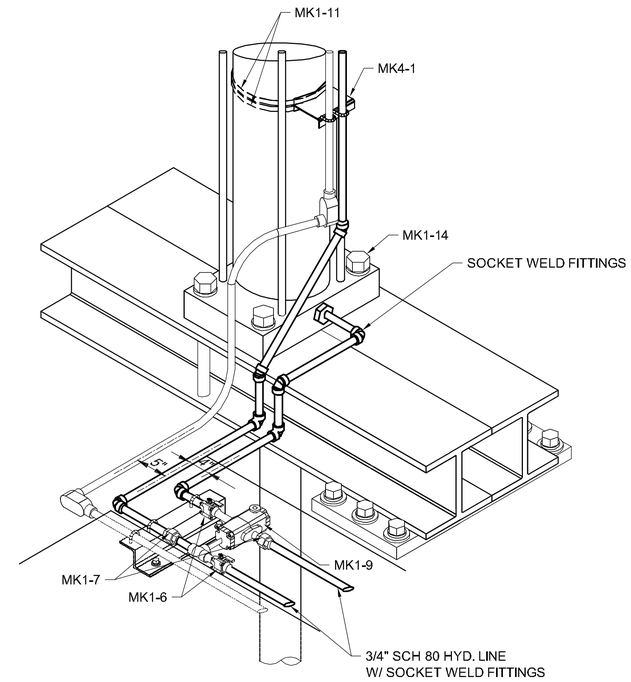

DETAIL 1 HM-1.00 HM-2.01

SCALE: 1"=1'-0"

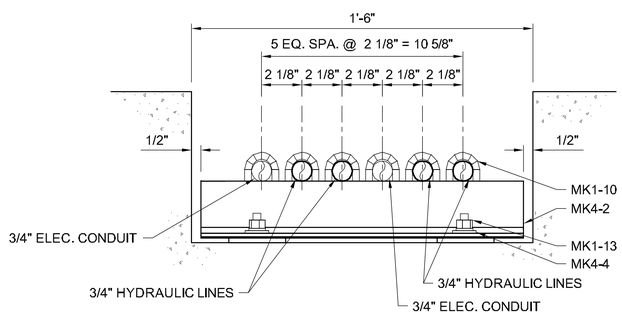

SECTION B HM-2.00 HM-2.01

SCALE: 3"=1'-0"

1" 1/2" 0 1"

SCALE: 1"= 1"

1' 6" 0 1'

SCALE: 3"= 1'-0"

REV.	DATE	DESCRIPTION	BY

URS

3500 N. Causeway Blvd., Suite 900
Metairie, Louisiana 70002
(504) 837-6326

LOUISIANA COASTAL PROTECTION AND RESTORATION AUTHORITY
COASTAL ENGINEERING DIVISION
450 LAUREL STREET
BATON ROUGE, LOUISIANA 70802

DRAWN BY: SDC III
DESIGNED BY: JAY YERUBANDI

MISSISSIPPI RIVER REINTRODUCTION INTO MAUREPAS SWAMP
ST. JOHN THE BAPTIST PARISH, LOUISIANA

P.O.-29 URS PROJECT NUMBER: 10001801

95% SUBMITTAL

APPROVED BY: RYAN KOENIG

MECHANICAL SECTIONS

DATE: SEPTEMBER, 2013

SHEET HM-2.01

P:\OCPR\10001801 Final Design I\CAD\Current Drawings\Maurepas_HM-2.01_Mechanical Sections.dwg, Oct 22, 2013 - 1:21:35PM, silas_cunningham

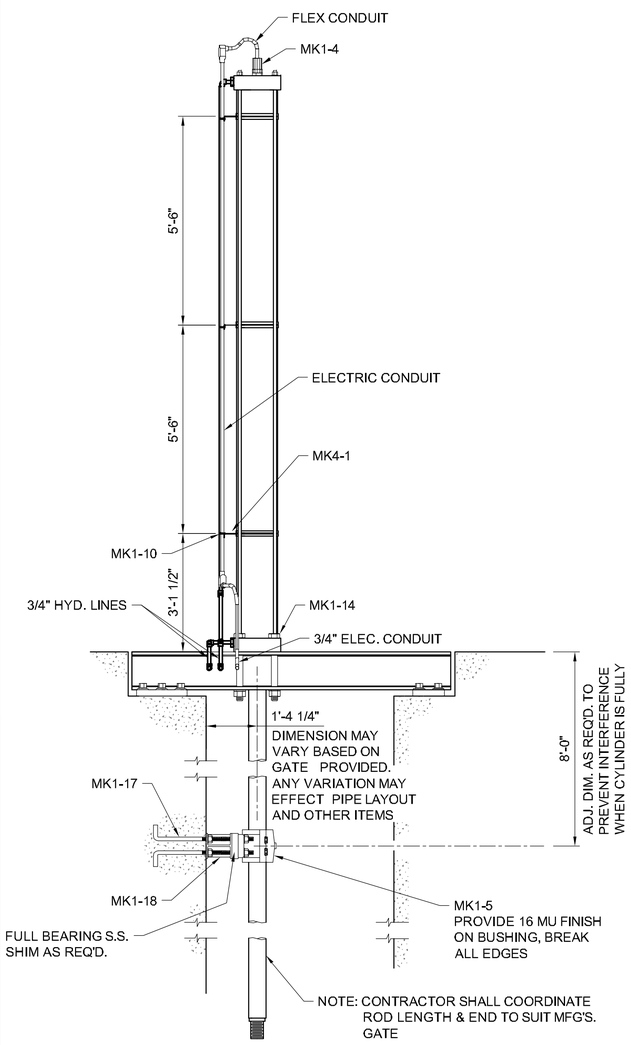

SECTION

A
S-XX
S-XX

SCALE: 1/2"=1'-0"

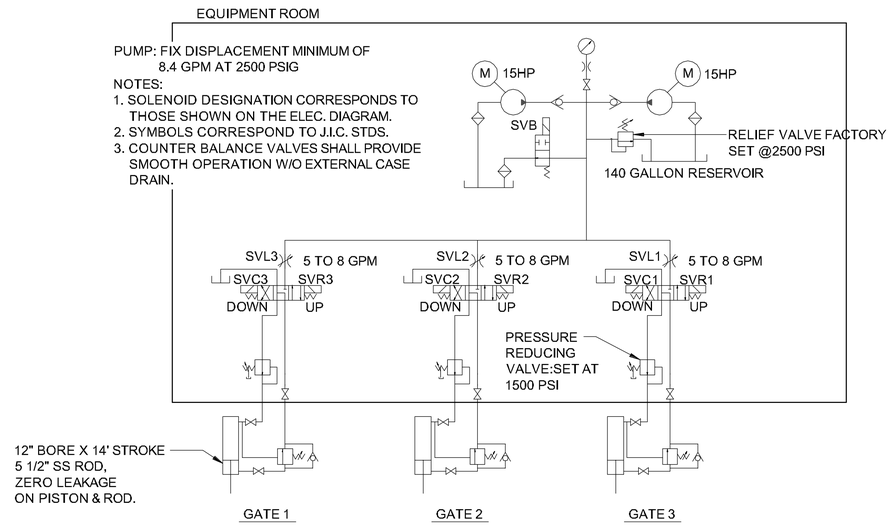

HYDRAULIC SCHEMATIC

SCALE: N.T.S.

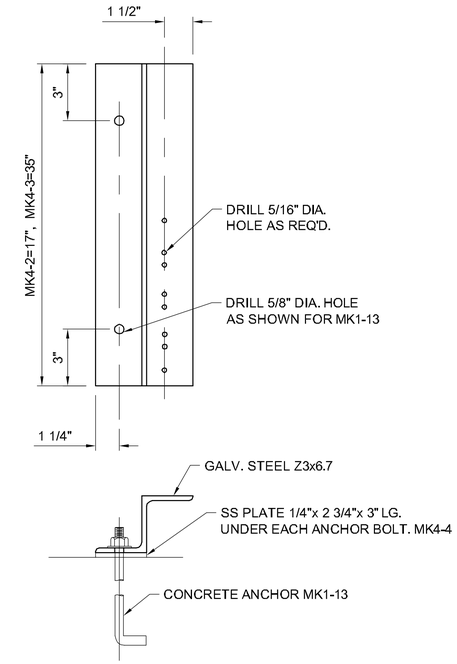

NOTE:
MAT'L. STEEL, HOT DIPPED GALV. AFTER FABRICATION

MK4-2, MK4-3

PIPE SUPPORTS

SCALE: 3" =1'-0"

NOTE:
NOT ALL PARTS ARE LISTED. ALL ITEMS REQUIRED FOR A COMPLETE INSTALLATION SUCH AS FASTNERS, AND PIPE FITTINGS, ARE PART OF THIS CONTRACT.

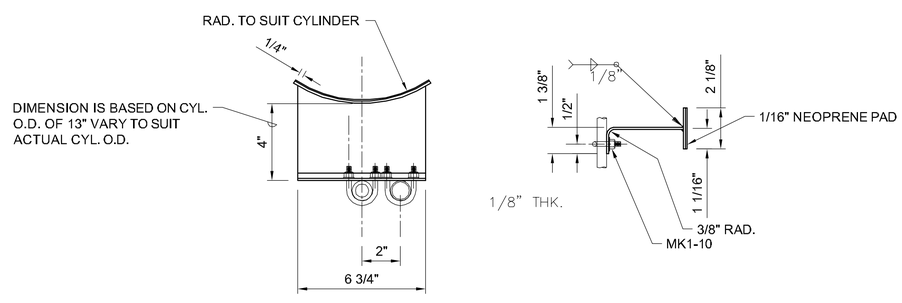

NOTE:
MAT'L. STEEL, HOT DIPPED GALV. AFTER FABRICATION

CYLINDER PIPE SUPPORT

SCALE: 3" =1'-0"

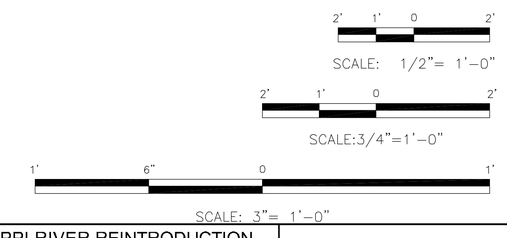

REV.	DATE	DESCRIPTION	BY

URS
3500 N. Causeway Blvd., Suite 900
Metairie, Louisiana 70002
(504) 837-6326

LOUISIANA COASTAL PROTECTION AND RESTORATION AUTHORITY
COASTAL ENGINEERING DIVISION
450 LAUREL STREET
BATON ROUGE, LOUISIANA 70802

MISSISSIPPI RIVER REINTRODUCTION INTO MAUREPAS SWAMP
ST. JOHN THE BAPTIST PARISH, LOUISIANA

P.O.-29 URS PROJECT NUMBER: 10001801

95% SUBMITTAL

MECHANICAL DETAILS

DATE: SEPTEMBER, 2013

DRAWN BY: SDC III | DESIGNED BY: JAY YERUBANDI | APPROVED BY: RYAN KOENIG | SHEET HM-2.02

P:\OCPR\10001801 Final Design II\CAD\Current Drawings\Maurepas_HM-2.02_Mechanical Details.dwg, Oct 22, 2013 - 1:22:54PM, silas_cunningham

- GLOBE VALVE
- BALL VALVE
- BALL VALVE (TRUE UNION)
- CHECK VALVE
- TWIN DISC CHECK VALVE
- CUSHIONED SWING CHECK VALVE
- BUTTERFLY VALVE
- PLUG VALVE
- CONE VALVE
- DIAPHRAGM
- ANGLE VALVE
- THREE WAY VALVE
- FOUR WAY VALVE
- PRESSURE REDUCING VALVE
- BACKFLOW PREVENTER
- SOLENOID OPERATED VALVE
- BACK PRESSURE VALVE
- PRESSURE RELIEF OR SAFETY VALVE
- AIR RELEASE VALVE
- KNIFE GATE VALVE
- NEEDLE VALVE
- ROTARY VALVE
- FOOT VALVE
- POST INDICATING VALVE
- PINCH VALVE
- DIAPHRAM WEIR VALVE
- PNEUMATIC DIAPHRAGM OPERATED VALVE
- CYLINDER OPERATED VALVE
- ELECTRIC MOTOR OPERATED VALVE
- FLOAT VALVE
- PRESSURE CONTROL VALVE (PCV)
- TEMPERATURE CONTROL VALVE (TCV)
- AUTOMATIC AIR VENT (AAV)
- MANUAL AIR VENT (MAV)
- THERMOWELL
- WEIR GATE (WG)
- SLIDE GATE (SG)
- SLUICE GATE (SLG)
- TELESCOPING VALVE (TV)
- STEAM TRAP
- MANUAL VOLUME DAMPER
- ACTUATED VOLUME DAMPER
- FLEXIBLE CONNECTION
- EXPANSION JOINT
- PIPE GUIDE
- PIPE ANCHOR

- UNION
- WYE STRAINER
- BASKET STRAINER
- COUPLING (TRANSITION)
- QUICK COUPLING
- CALIBRATION CHAMBER
- WATER HAMMER ARRESTOR
- ROTAMETER
- PULSATION DAMPER
- EDUCTOR
- INJECTOR
- STATIC METER
- MIXER
- V-NOTCH WEIR
- DRAIN
- DIAPHRAGM OR LOAD CELL
- AIR SET
- INSERTION INSTRUMENT
- AUTOMATIC CONDENSATE TRAP
- PRESS/VAC RELIEF VALVE W/O FLAME ARRESTOR
- PRESS/VAC RELIEF WITH FLAME ARRESTOR
- FLAME ARRESTOR WITH COVER
- FLAME ARRESTER
- SPACE HEATER/HEAT TRACING
- ELECTRIC MOTOR
- CAP
- RUPTURE DISK (ON PRESSURE)
- RUPTURE DISK (ON VACUUM)
- FLEXIBLE HOSE WITH QUICK COUPLINGS
- FLANGES
- PRESSURE INSTRUMENT PROTECTOR
- PARTICULATE FILTER
- DESSICANT DRYER
- SEPARATOR
- BASKET STRAINER
- BUBBLER SYSTEM
- OPEN CHANNEL OR OPENINGS BETWEEN TANKS (NON-PIPED FLOW)
- PRESSURE RELIEF AND FLAME TRAP

- CENTRIFUGAL PUMP (SHOWN WITH MOTOR)
- SPLIT CASE PUMP (SHOWN WITH MOTOR)
- GEAR PUMP (SHOWN WITH MOTOR)
- SUBMERSIBLE OR SUMP PUMP (SHOWN WITH MOTOR)
- METERING PUMP (SHOWN WITH MOTOR)
- PROGRESSIVE CAVITY PUMP (SHOWN WITH MOTOR)
- DIAPHRAGM PUMP (SHOWN WITH MOTOR)
- VERTICAL TURBINE PUMP (SHOWN WITH MOTOR)
- ROTARY LOBE PUMP (SHOWN WITH MOTOR)
- PISTON PUMP
- ROTOR PUMP
- HOSE PUMP

- CENTRIFUGAL BLOWER OR COMPRESSOR (SHOWN WITH MOTOR)
- PD BLOWER OR COMPRESSOR (SHOWN WITH MOTOR)
- VERTICAL TURBINE PUMP (SHOWN WITH NAT. GAS ENGINE)

FLOW ELEMENT SYMBOLS

- VORTEX FLOW METER
- CORIOLIS FLOW METER
- PROPELLER FLOW METER
- ORIFICE PLATE
- PARSHALL FLUME
- MAGNETIC FLOW METER
- FLOW TUBE (VENTURI)
- DISC FLOW METER

AGITATOR SYMBOLS

- RADIAL
- PROPELLER
- TURBINE

- PRIMARY PROCESS LINE
- SECONDARY PROCESS LINE
- EXISTING
- EXISTING TO BE REMOVED
- EXISTING TO BE ABANDONED
- FUTURE
- PIPE SPEC CHANGE (DIP / PVC)
- HYDRAULIC
- SHEET CONTINUATION (LINE ONE / LINE TWO / SHEET)
- XX — CONTINUATION ELSEWHERE, SAME SHEET

EQUIPMENT SYMBOLS

NEW EQUIPMENT | EXIST. EQUIPMENT | FUTURE EQUIPMENT

EQUIPMENT/UNIT IDENTIFICATION

SYS-UD-UN

- UNIT NUMBER
- UNIT DESIGNATION (EQUIP. TYPE)
- SYSTEM IDENTIFICATION

PIPE LINE IDENTIFICATION

DT-SSSS-MOC

- MATERIAL OF CONSTRUCTION
- SERVICE IDENTIFICATION
- NOMINAL PIPE DIAMETER

NOTE: ALL INFORMATION ON THIS DRAWING MAY NOT BE USED.

REV.	DATE	DESCRIPTION	BY
A	8/30/13	95% ISSUE	BRP

URS
3500 N. Causeway Blvd., Suite 900
Metairie, Louisiana 70002
(504) 837-6326

LOUISIANA COASTAL PROTECTION AND RESTORATION AUTHORITY
COASTAL ENGINEERING DIVISION
450 LAUREL STREET
BATON ROUGE, LOUISIANA 70802

MISSISSIPPI RIVER REINTRODUCTION INTO MAUREPAS SWAMP
ST. JOHN THE BAPTIST PARISH, LOUISIANA

P.O.-29 URS PROJECT NUMBER: 10001801

95% SUBMITTAL

PROCESS AND INSTRUMENTATION DIAGRAM SYMBOLS

DATE: SEPTEMBER, 2013

SHEET HI-1.00

DRAWN BY: RLS | DESIGNED BY: BRP | APPROVED BY:

P:\OCPR\10001801 Final Design II\CAD\Current Drawings\Maurepas_HI-1.00.dwg, Oct 22, 2013 - 1:19:16PM, silas_cunningham

ABBREVIATIONS

SYSTEM, PROCESS & SERVICE

AB	AERATION BASIN
AC	AIR COMPRESSOR
AD	AROBIC DIGESTER
AER	AERATOR
AFCR	AFTER COOLER
AIR	AIR
AL	ALUM
AMM	AMMONIA
B	BURNER
BFP	BELT FILTER PRESS
BIOG	BIO-GAS
BL	BLOWER
BLR	BOILER
BM	BATCH METER
BRH	BLOWDOWN HEAT RECOVERY
BSN	BASIN
BS	BAR SCREEN
BW	BACKWASH
BWR	BACKWASH RETURN
BWS	BACKWASH SUPPLY
BYP	BYPASS
C	CARBON
CAB	CABINET
CAM	CAMERA
CAUS	CAUSTIC
CB	CORE BLOW
CD	CONDENSATE
CEN	CENTRATE
CENT	CENTRIFUGE
CH	CONVERGING HOPPER
CHEM	CHEMICAL
CHWR	COOLING WATER RETURN
CHWS	COOLING WATER SUPPLY
CL	CLARIFIER OR CHLORINE
CLA	CHEMICAL LOAD AREA
CLAR	CLARIFIER
CLAS	CLASSIFIER
CLDX	CHLORINE DIOXIDE
CLS	CHLORINE SOLUTION
CLTR	CHLORINATOR
COMP	COMPOST
CONC	CONCRETE
CONV	CONVEYOR
CORH	CORROSION INHIBITER
CRN	CRANE
CSCR	CHLORINE SCRUBBER
DAF	DISSOLVED AIR FLOTATION
DC	DUST COLLECTOR
DCL	DECHLORINATION
DCNT	DECANT
DER	DEAERATOR
DET	DETECTOR
DIG	DIGESTER
DRV	DRIVE
DRY	DRYER
DS	DIGESTED SLUDGE
DSL	DISINFECTION SOLUTION
DSY	DISINFECTION SYSTEM
DT	DAY TANK
ED	EDUCTOR
EF	EXHAUST FAN
EFF	EFFLUENT
EJ	EJECTOR
ELSG	ELECTRIC SLUICE GATE
EMV	ELECTRIC MOTOR OPERATED VALVE
EPY	EMULSIFIED POLYMER
EQ	EQUALIZATION
EV	ELECTRICALLY OPERATED VALVE
FC	FAILED CLOSED
FCL	FINAL CLARIFIER
FCP	FIELD CONTROL PANEL
FDR	FEEDER
FIL	FILTRATE/FILTER
FIL(X)	FILTER
FIN	FINAL
FL	FAIL LOCKED
FMX	FLASH MIX
FO	FAILED OPEN
FOR	FUEL OIL RETURN
FOS	FUEL OIL SUPPLY
FOT	FUEL OIL TANK
FP	FILTER PRESS
FSC	FINE SCREEN CONVEYOR

SYSTEM, PROCESS & SERVICE (CONT.)

GBT	GRAVITY BELT THICKENER
GR	GRIT
GRC	GRIT CHAMBER
GRND	GRINDER
GSC	GRIT SCREW CLASSIFIER
HG	HAND GATE
HPS	HIGH PRESSURE STEAM
HPW	HIGH PRESSURE WATER
HSG	HYDRAULIC SLUICE GATE
HST	HOIST
HT	HEAT TRACE
HV	HYDRAULIC VALVE
HWR	HEATED WATER RETURN
HWS	HEATED WATER SUPPLY
IA	INSTRUMENT AIR
INF	INFLUENT
INT	INTERMEDIATE
IT	INSULATE & HEAT TRACE
LA	LAND APPLICATION
LC	LEVEL CONTROL
LCP	LOCAL CONTROL PANEL
LI	LIME
LOX	LIQUID OXYGEN
LPG	LP GAS
LPS	LOW PRESSURE STEAM
LPY	LIQUID POLYMER
MA	MACERATOR
MCP	MAIN CONTROL PANEL
ME	MECHANICAL EQUIPMENT
MECH	MECHANISM
MH	METHANE
ML	MIXED LIQUOR
MP	METERING PUMP
MV	METERING VAULT
MOV	MOTOR OPERATED VALVE
MX	MIXER
NC	NORMALLY CLOSED
NEU	NEUTRALIZATION
NG	NATURAL GAS
NO	NORMALLY OPEN
NOZ	NOZZLE
NPW	NON-POTABLE WATER
NPY	NEAT POLYMER
NU	NUTRIENT
O/W	OIL WATER SEPARATOR
OCS	ODOR CONTROL SYSTEM
OD	OXIDATION DITCH
OF	OVERFLOW
OG	OFF GAS
OZ	OZONE
P	PUMP
PA	POST AERATION
PBU	POWER BACKUP
PCL	PRIMARLY CLARIFIER
PD	PLANT DRAIN
PE	PROCESS EQUIPMENT
PF	PARTICULATE FILTER
PG	PIPE GALLERY
PI	PRIMARY INFLUENT
PL	PROCESS LIQUID
PNL	PANEL
PRE	PRELIMINARY TREATMENT EFFLUENT
PSL	PRIMARY SLUDGE
PW	POTABLE WATER
PY	POLYMER
RAS	RETURN ACTIVATED SLUDGE
RDS	ROTARY DRUM SCREEN
REC	RECYCLE
RM	ROTAMETER
RO	RECOVERED OIL
RP	RECIRCULATING PUMP
RS	RAW SEWER

SYSTEM, PROCESS & SERVICE (CONT.)

SA	SULFURIC ACID
SAM	SAMPLE
SAMP	SAMPLER
SBS	SODIUM BISULFITE
SC	SCUM
SCLE	SCALE
SCL	SECONDARY CLARIFIER
SHFDR	SODIUM HYDROXIDE FEEDER
SCLR	SODIUM CHLORITE
SHCFD	SODIUM HYPOCHLORITE FEEDER
SCR	SCRUBBER
SCRN	SCREEN
SCRS	SCREENED SOLIDS
SD	STORM DRAIN
SE	SECONDARY EFFLUENT
SEAL	SEAL WATER
SEP	SEPARATOR
SET	SETTLING
SF	SUPPLY FAN
SG	SLIDE GATE
SH	SODIUM HYDROXIDE
SHCLR	SODIUM HYPOCHLORITE
SHT	SLUDGE HOLDING TANK
SL	SLUDGE
SLG	SLUICE GATE
SMP	SUMP
SMX	STATIC MIXER
SN	SEPTAGE
SOLN	SOLUTION
SP	SCREENINGS PRESS
SPL	SPLITTER BOX
SS	SANITARY SEWER
STG	STAGE
STRN	STRAINER
SV	SOLENOID VALVE
SWP	SCREEN WASH PRESS
SYS	SYSTEM
T	TANK
TCV	TEMPERATURE CONTROL VALVE
THDSL	THICKENED DIGESTED SLUDGE
THK	THICKENER
THWAS	THICKENED WASTE ACTIVATED SLUDGE
UD	UNDERDRAIN
UW	UTILITY WATER
V	VALVE
VACR	VACUUM REGULATOR
VAS	VACUUM AUTO SWITCHOVER
VCP	VALVE CONTROL PANEL
VNT	VENT
VIB	VIBRATION
VTX	VORTEX
WAS	WASTE ACTIVATED SLUDGE
WAT	WATER
WG	WEIR GATE
WNH	WINCH

MATERIAL OF CONSTRUCTION

BS	BLACK STEEL
CISP	CAST IRON SOIL PIPE
CPVC	CHLORINATED POLYVINYL CHLORIDE
CSP	CARBON STEEL (SEAMLESS)
CU	COPPER
DI	DUCTILE IRON PIPE
FRP	FIBERGLASS REINFORCED PLASTIC
FTB	FLEXIBLE TUBING
GS	GALVANIZED STEEL
PB	POLYBUTYLENE
PE	POLYETHYLENE
PP	POLYPROPYLENE
PVC	POLYVINYL CHLORIDE
RH	RUBBER HOSE
STL	STEEL PIPE (FABRICATED)
SSTL	STAINLESS STEEL

VALVE TYPES

BLV	BALL VALVE
BV	BUTTERFLY VALVE
CNV	CONE VALVE
CV	CHECK VALVE
DV	DIAPHRAGM VALVE
GV	GATE VALVE
GBV	GLOBE VALVE
KV	KNIFE VALVE
MO	MOTOR OPERATED VALVE
MV	MUD VALVE
NV	NEEDLE VALVE
PHV	PINCH VALVE
PV	PLUG VALVE
PRV	PRESSURE REDUCING VALVE

NOTE: ALL INFORMATION ON THIS DRAWING MAY NOT BE USED.

REV.	DATE	DESCRIPTION	BY

URS
3500 N. Causeway Blvd., Suite 900
Metairie, Louisiana 70002
(504) 837-6326

LOUISIANA COASTAL PROTECTION AND RESTORATION AUTHORITY
COASTAL ENGINEERING DIVISION
450 LAUREL STREET
BATON ROUGE, LOUISIANA 70802

MISSISSIPPI RIVER REINTRODUCTION INTO MAUREPAS SWAMP
ST. JOHN THE BAPTIST PARISH, LOUISIANA

P.O.-29 URS PROJECT NUMBER: 10001801

95% SUBMITTAL

PROCESS AND INSTRUMENTATION DIAGRAM ABBREVIATIONS

DATE: SEPTEMBER, 2013

DRAWN BY:
DESIGNED BY: BRP
APPROVED BY:
SHEET HI-1.01

P:\QCPR\10001801 Final Design II\CAD\Current Drawings\Maurepas_HI-1.01.dwg, Oct 22, 2013 - 1:18:52PM, silas_cunningham

ELECTRICAL AND CONTROL SYMBOLS

- INDIVIDUAL STARTER OR CONTROLLER
- STARTER OR CONTROLLER IN MOTOR CONTROL CENTER
- STARTER OR CONTROLLER (FURNISHED WITH EQUIPMENT)
- GENERAL CONTROL PANEL OR EQUIPMENT, AS NOTED
- GENERAL CONTROL PANEL OR EQUIPMENT, AS NOTED (FURNISHED WITH EQUIPMENT)
- GENERAL INTERLOCK OR CONTROL FUNCTION (HARDWIRED)
- GENERAL INTERLOCK OR CONTROL FUNCTION (PLC OR SOFTWARE)
- INDICATING LIGHT
- ALARM LIGHT/ANNUNCIATOR
- T — TELEMETERED
- T — TELEPHONE
- ZC, M — MODULATING OR POSITIONING MOTOR (CONTROLLER FURNISHED WITH MOTOR)
- ZSO, ZSC — OPEN/CLOSE MOTOR (CONTROLLER FURNISHED WITH MOTOR)
- VFD — VARIABLE FREQUENCY DRIVE (AC)
- VSD — VARIABLE SPEED DRIVE (DC)
- AUDIBLE DEVICE
- CAMERA
- LEVEL ELEMENT (ULTRASONIC)

HAND SWITCH SYMBOLS AND LEGEND

- XXX/XXX — FIELD MOUNTED
- XXX/XXX — FRONT MCC MOUNTED
- XXX/XXX — REAR MCC MOUNTED
- XXX/XXX — FIELD MOUNTED (FURNISHED WITH EQUIPMENT)
- XXX/XXX — FRONT OF LOCAL PANEL MOUNTED (FURNISHED WITH EQUIPMENT)
- XXX/XXX — REAR OF PANEL MOUNTED (FURNISHED WITH EQUIPMENT)

AB	—	FUNCTION SELECTOR
EO	—	EMERGENCY OFF
ES	—	EMERGENCY STOP
FOR	—	FORWARD/OFF/REVERSE (MAINTAINED)
FSR	—	FORWARD/STOP/REVERSE (MAINTAINED)
HOA	—	HAND/OFF/AUTO
LOR	—	LOCAL/OFF/REMOTE
LR	—	LOCAL/REMOTE
MA	—	MANUAL/AUTO
OC	—	OPEN/CLOSE
OCA	—	OPEN/CLOSE/AUTO
OCR	—	OPEN/CLOSE/REMOTE
OO	—	ON/OFF
OS	—	OPERATION SWITCH
R	—	RESET
RS	—	RUN/STOP (AUTO RESET/RUN @ POWER INTERRUPTION)
RSJ	—	RUN/STOP/JOG
S	—	SILENCE
SR	—	SAFE/RUN
SS	—	START/STOP (MANUAL RESET @ POWER INTERRUPTION)
T	—	TEST
UD	—	UP/DOWN

ABBREVIATIONS

CP	CONTROL PANEL
FCP	FACTORY CONTROL PANEL
FWE	FURNISHED WITH EQUIPMENT
LCP	LOCAL CONTROL PANEL
MCC	MOTOR CONTROL CENTER
MCP	MAIN CONTROL PANEL
VIB	VIBRATION
VHC	VOLATILE HYDROCARBONS
TOR	TORQUE
DO	DISSOLVED OXYGEN
ORP	OXIDATION REDUCTION POTENTIAL
pH	HYDROGEN ION CONCENTRATION
SLBL	SLUDGE BLANKET LEVEL
TURB	TURBIDITY
COND	CONDUCTIVITY
PC	PARTICLE COUNT
PCS	PLANT CONTROL SYSTEM
SC	STREAMING CURRENT

INSTRUMENT SYMBOLS AND DESIGNATIONS

- XXXX/WZZZQ — FIELD MOUNTED
- XXXX/WZZZQ — FRONT OF MAIN PANEL MOUNTED
- XXXX/WZZZQ — REAR OF MAIN PANEL MOUNTED
- XXX/XXX — FRONT OF LOCAL PANEL MOUNTED
- XXX/WZZZQ — REAR OF LOCAL PANEL MOUNTED
- XXXX/WZZZQ — FIELD MOUNTED (FURNISHED WITH EQUIPMENT)
- XXX/XXX — FRONT PANEL MOUNTED (FURNISHED WITH EQUIPMENT)
- XXX/WZZZQ — REAR PANEL MOUNTED (FURNISHED WITH EQUIPMENT)
- XXXX/WZZZQ — SOFTWARE DEVICE DISPLAYED (CRT)
- XXX/XXX — SOFTWARE DEVICE NOT DISPLAYED

INSTRUMENT IDENTIFICATION

XXXX/WZZZQ

- XXXX — FUNCTIONAL IDENTIFICATION
- WZZZQ
  - MULTIPLE UNITS (A, B, ETC.)
  - SEQUENCE NUMBER
  - P&ID SHEET NUMBER
  - LOOP NUMBER

INSTRUMENT SYMBOLS

XXXX/WZZZQ — NEW INSTRUMENT

XXXX — EXISTING INSTRUMENT

LINE SYMBOLS

- ELECTRICAL SIGNAL
- A — ANALOG ELECTRICAL SIGNAL
- D — DISCRETE ELECTRIC SIGNAL
- E — EXISTING WIRING
- F — WIRING (FURNISHED WITH EQUIPMENT)
- P — POWER OR EQUIPMENT CONNECTION
- ES 120/1 — ELECTRIC SUPPLY – VOLTAGE/PHASE
- SIGNAL LINES NOT CONNECTED
- SIGNAL LINES CONNECTED
- PNEUMATIC SIGNAL
- SOFTWARE OR DATA LINK

LETTERS FOR FUNCTIONAL IDENTIFICATION

	FIRST LETTER		SUCCEEDING LETTERS		
	MEASURED OR INITIATING VARIABLE	MODIFIER	READOUT OR PASSIVE FUNCTION	OUTPUT FUNCTION	MODIFIER
A	ANALYSIS		ALARM		
B	BURNER FLAME				
C	CONDUCTIVITY (ELECTRICAL)			CONTROL	
D	DENSITY (MASS) OR SPECIFIC GRAVITY	DIFFERENTIAL	DELAY		
E	VOLTAGE (EMF)		PRIMARY ELEMENT		
F	FLOW RATE	RATIO (FRACTION)			
G	GAGING		GLASS		
H	HAND (MANUALLY INITIATED)				HIGH
I	CURRENT (ELECTRICAL)		INDICATE		
J	POWER	SCAN			
K	TIME OR SCHEDULE			CONTROL STATION	
L	LEVEL		LIGHT (PILOT)		LOW
M	MOISTURE OR HUMIDITY	MOMENTARY			MIDDLE OR INTERMEDIATE
N	UNCLASSIFIED				
O	UNCLASSIFIED		ORIFICE (RESTRICTION)		
P	PRESSURE OR VACUUM		POINT (TEST CONNECTION)		
Q	QUANTITY OR EVENT	INTEGRATE OR TOTALIZE			
R	RADIOACTIVITY		RECORD OR PRINT		
S	SPEED OR FREQUENCY	SAFETY		SWITCH	
T	TEMPERATURE			TRANSMIT OR TRANSMITTER	
U	MULTIVARIABLE		MULTIFUNCTION	MULTIFUNCTION	MULTIFUNCTION
V	VIBRATION, MECHANICAL ANALYSIS			VALVE, DAMPER OR LOUVER	
W	WEIGHT OR FORCE		WELL		
X	UNCLASSIFIED			UNCLASSIFIED	
Y	UNCLASSIFIED			RELAY, COMPUTE OR CONVERT	
Z	POSITION			DRIVE, ACTUATE OR UNCLASSIFIED FINAL CONTROL ELEMENT	

NOTES:

1. ALL DETAIL WIRING AND ELECTRICAL COMPONENTS ARE NOT SHOWN ON THE PROCESS AND INSTRUMENTATION DIAGRAM DRAWINGS. THE ELECTRICAL DRAWINGS ARE TO BE USED IN CONJUNCTION WITH THE PROCESS AND INSTRUMENTATION DIAGRAMS. THE PROCESS AND INSTRUMENTATION DIAGRAMS ARE PRESENTED AS A COORDINATING TOOL THAT INDICATES THE MAIN CONTROL LOGIC FOR THE PROJECT PROCESS SYSTEMS AND COMPONENTS. ACTUAL DETAIL LOGIC AND CONTROL COMPONENTS MAY DIFFER DEPENDING ON THE MANUFACTURER THAT IS AWARDED THE CONTRACT.
2. SEE CIVIL AND PROCESS DRAWINGS FOR PIPING DETAILS.
3. ALL INFORMATION ON THIS LEGEND MAY NOT BE USED.

REV.	DATE	DESCRIPTION	BY
A	8/30/13	95% ISSUE	BRP

URS
3500 N. Causeway Blvd., Suite 900
Metairie, Louisiana 70002
(504) 837-6326

LOUISIANA COASTAL PROTECTION AND RESTORATION AUTHORITY
COASTAL ENGINEERING DIVISION
450 LAUREL STREET
BATON ROUGE, LOUISIANA 70802

DRAWN BY:
DESIGNED BY: BRP

MISSISSIPPI RIVER REINTRODUCTION INTO MAUREPAS SWAMP
ST. JOHN THE BAPTIST PARISH, LOUISIANA

P.O.-29 URS PROJECT NUMBER: 10001801

95% SUBMITTAL

APPROVED BY:

PROCESS & INSTRUMENTATION DIAGRAM SYMBOLS & ABBREVIATIONS

DATE: SEPTEMBER, 2013

SHEET HI-1.02

P:\OCPR\10001801 Final Design II\CAD\Current Drawings\Maurepas_HI-1.02.dwg, Oct 22, 2013 - 1:18:24PM, silas_cunningham

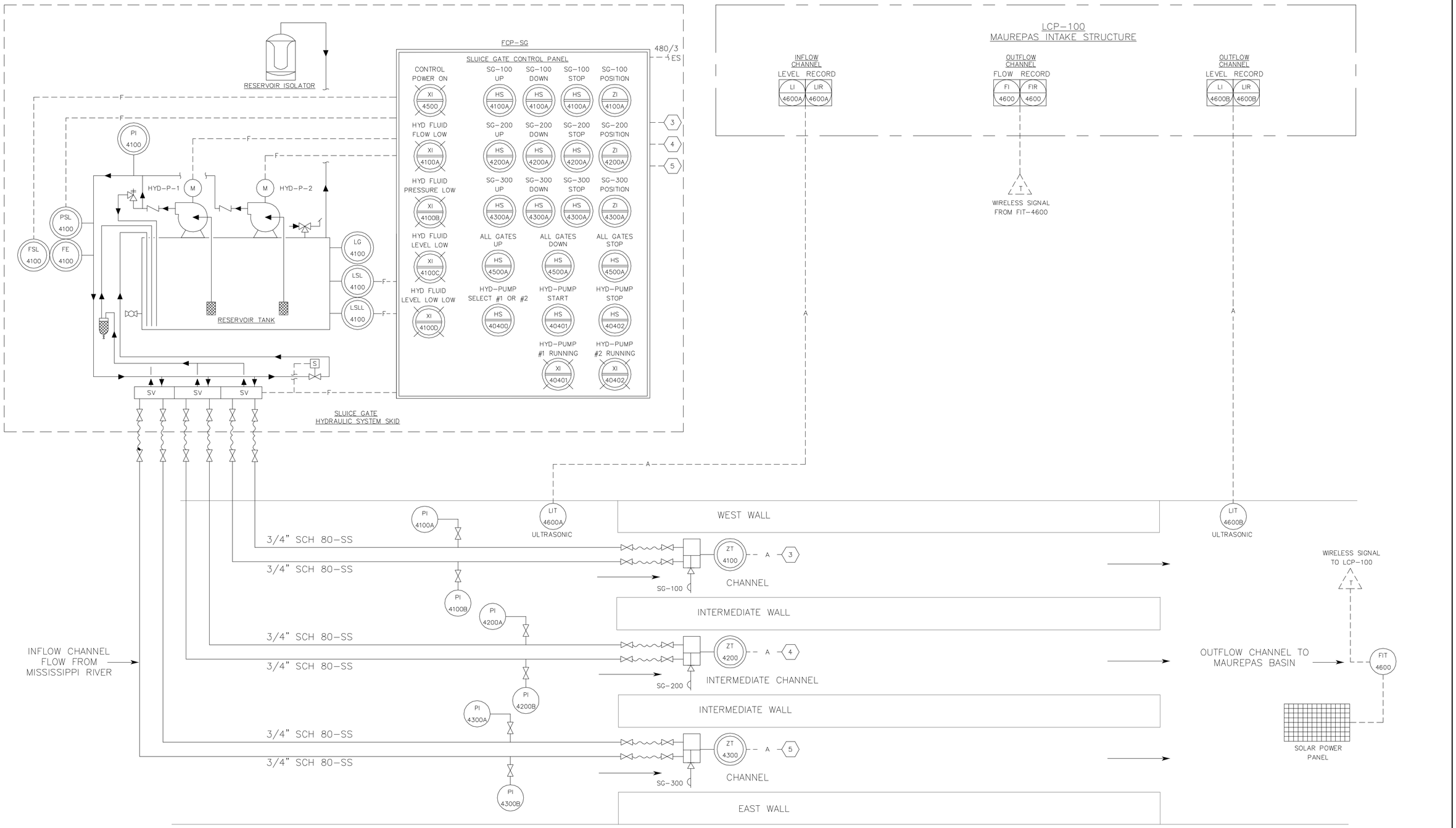

REV.	DATE	DESCRIPTION	BY
A	8/30/13	95% ISSUE	BRP

URS
3500 N. Causeway Blvd., Suite 900
Metairie, Louisiana 70002
(504) 837-6326

LOUISIANA COASTAL PROTECTION AND RESTORATION AUTHORITY
COASTAL ENGINEERING DIVISION
450 LAUREL STREET
BATON ROUGE, LOUISIANA 70802

DRAWN BY:
DESIGNED BY: BRP

MISSISSIPPI RIVER REINTRODUCTION INTO MAUREPAS SWAMP
ST. JOHN THE BAPTIST PARISH, LOUISIANA

P.O.-29 URS PROJECT NUMBER: 10001801

95% SUBMITTAL

APPROVED BY: TMR

PROCESS AND INSTRUMENTATION DIAGRAM

DATE: SEPTEMBER, 2013

SHEET NO: HI-1.03

P:\OCPR\10001801 Final Design I\CAD\Current Drawings\Maurepas_HI-1.03.dwg, Oct 22, 2013 - 1:20:15PM, silas_cunningham

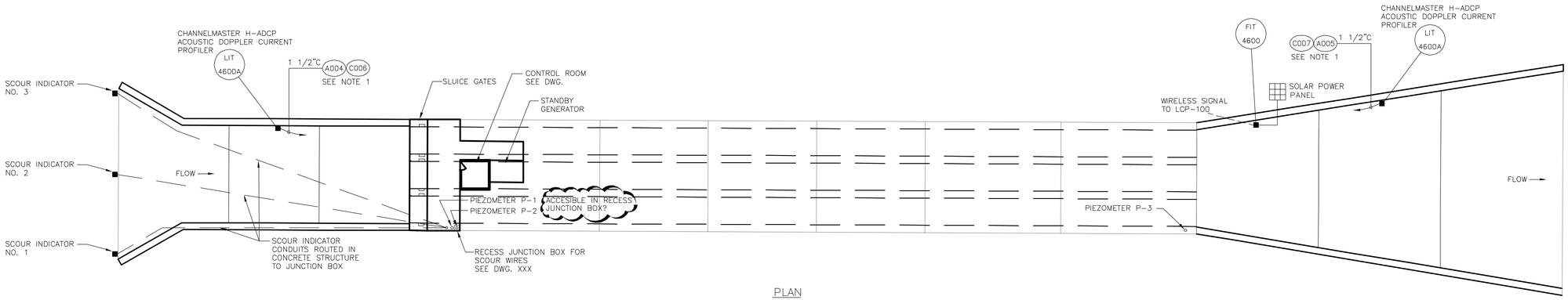

PLAN
1"=20'-0"

NOTES:

1. ROUTE CONDUIT(S) IN CONCRETE STRUCTURE TO CONTROL ROOM PANEL.

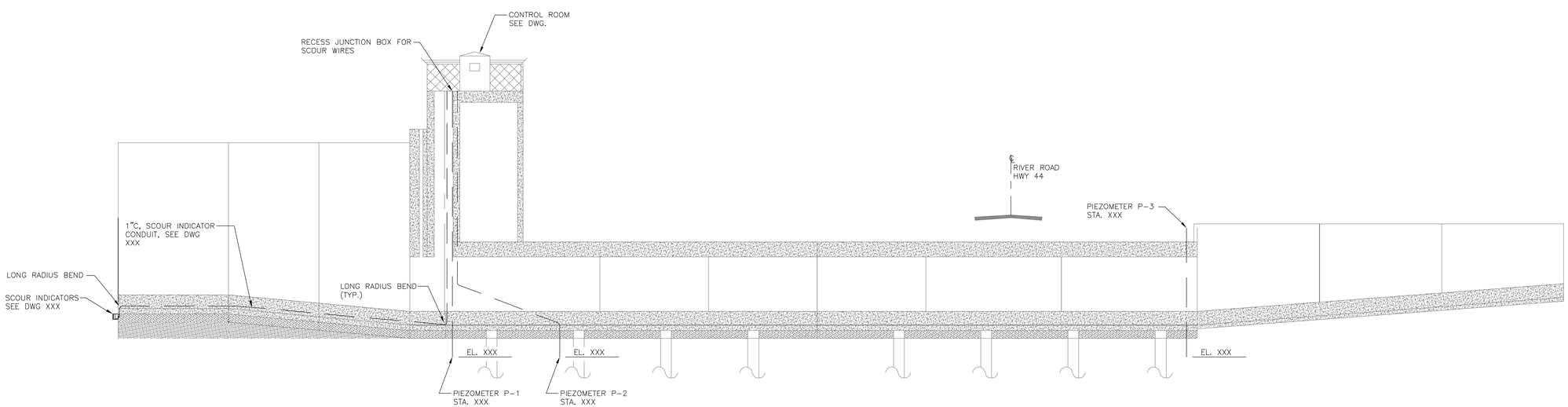

SECTION
1"=20'-0"

REV.	DATE	DESCRIPTION	BY
A	8/30/13	95% ISSUE	BRP

URS
3500 N. Causeway Blvd., Suite 900
Metairie, Louisiana 70002
(504) 837-6326

LOUISIANA COASTAL PROTECTION AND
RESTORATION AUTHORITY
COASTAL ENGINEERING DIVISION
450 LAUREL STREET
BATON ROUGE, LOUISIANA 70802

DRAWN BY: APO JMB
DESIGNED BY: BRP

MISSISSIPPI RIVER REINTRODUCTION
INTO MAUREPAS SWAMP
ST. JOHN THE BAPTIST PARISH, LOUISIANA

P.O.-29 URS PROJECT NUMBER: 10001801

95% SUBMITTAL

APPROVED BY: KCR

STRUCTURE
INSTRUMENTATION
PLAN AND DETAILS

DATE: SEPTEMBER 2013

SHEET HI-1.04

P:\OCPR\10001801 Final Design II\CAD\Current Drawings\Maurepas_HI-1.04.dwg, Oct 22, 2013 - 1:19:40PM, silas_cunningham

EDGE OF WATER

TOP BANK OF RIVER

Edge of Concrete/ Toe of Levee

Crown of Levee

SLUICE GATES STRUCTURE

ROUTE UP WALL TO ATS SWITCH

END CONCRETE U-CHANNELS

FLOW

FLOW

BEGIN CONCRETE U-CHANNELS

CONTROL ROOM

TIE-IN TO OVERHEAD UTILITY POWER SEE DET. ON DWG HE-1.02

NEW POWER POLE

2"C (H001)

STANDBY GENERATOR

TEL. POLE

RIVER ROAD (HWY 44)

GAS WARNING SIGN

POWER POLE

UTILITY POWER LINE

END OF TOE OF SLOPE

HWY (HWY 44)

30' 15' 0 30' 60'

1"= 30'

REV.	DATE	DESCRIPTION	BY
A	8/30/13	95% ISSUE	BRP

URS

3500 N. Causeway Blvd., Suite 900
Metairie, Louisiana 70002
(504) 837-6326

LOUISIANA COASTAL PROTECTION AND RESTORATION AUTHORITY

COASTAL ENGINEERING DIVISION

450 LAUREL STREET
BATON ROUGE, LOUISIANA 70802

MISSISSIPPI RIVER REINTRODUCTION INTO MAUREPAS SWAMP

ST. JOHN THE BAPTIST PARISH, LOUISIANA

P.O.-29 URS PROJECT NUMBER: 10001801

95% SUBMITTAL

HEADWORKS ELECTRICAL SITE PLAN

DATE: SEPTEMBER, 2013

DRAWN BY: JMB

DESIGNED BY: BRP

APPROVED BY: TMR

SHEET HE-1.00

P:\CPR\10001801 Final Design II\CAD\Current Drawings\Maurepas_HE-1.00.dwg, Oct 22, 2013 - 1:09:10PM, silas_cunningham

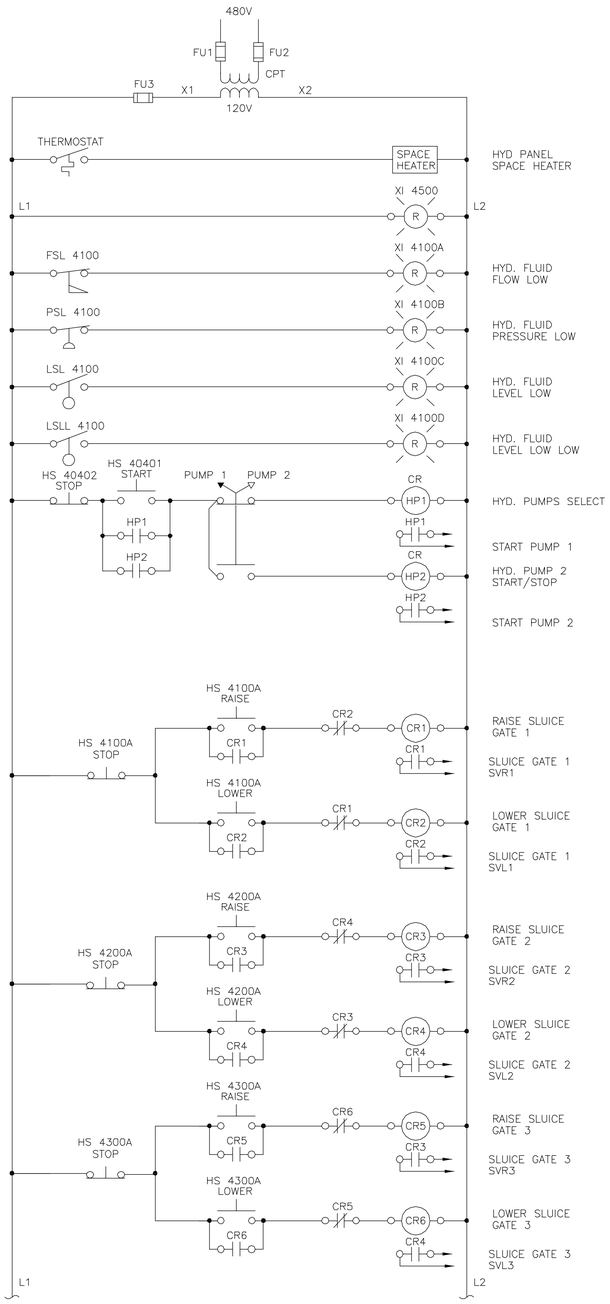

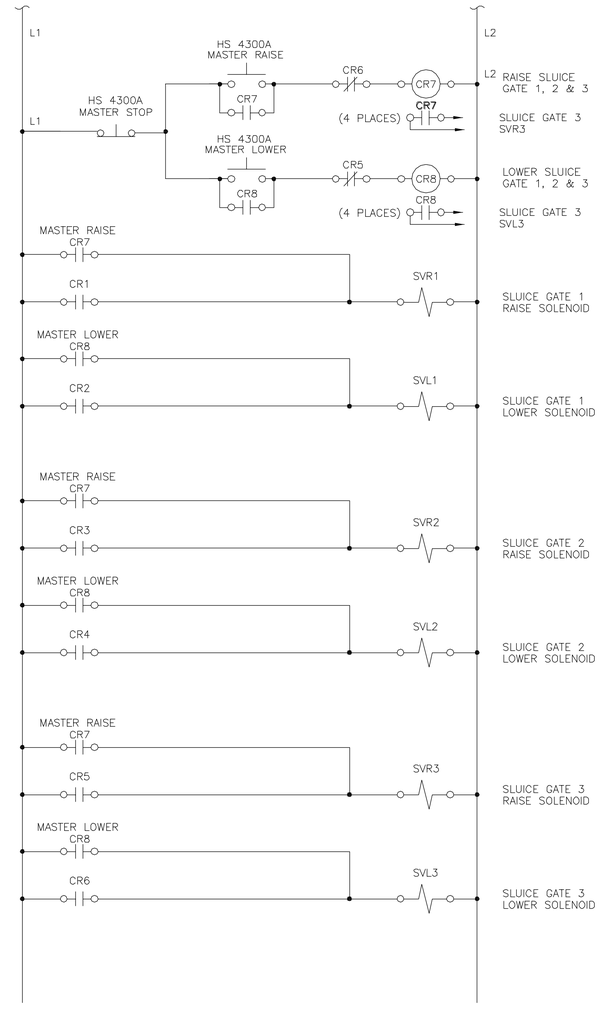

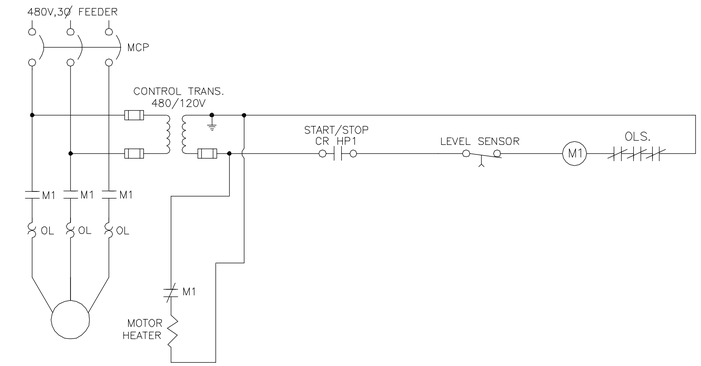

HYDRAULIC MOTOR 1 CONTROL SCHEMATIC

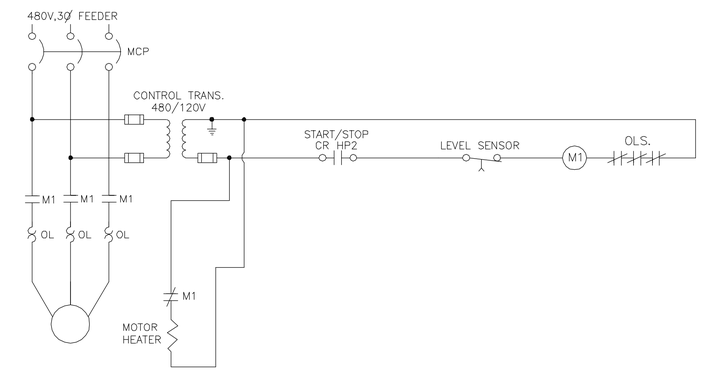

HYDRAULIC MOTOR 2 CONTROL SCHEMATIC

REV.	DATE	DESCRIPTION	BY
A	8/30/13	95% ISSUE	BRP

URS
3500 N. Causeway Blvd., Suite 900
Metairie, Louisiana 70002
(504) 837-6326

LOUISIANA COASTAL PROTECTION AND RESTORATION AUTHORITY
COASTAL ENGINEERING DIVISION
450 LAUREL STREET
BATON ROUGE, LOUISIANA 70802

DRAWN BY: JMB
DESIGNED BY: BRP

MISSISSIPPI RIVER REINTRODUCTION INTO MAUREPAS SWAMP
ST. JOHN THE BAPTIST PARISH, LOUISIANA

P.O.-29 URS PROJECT NUMBER: 10001801

95% SUBMITTAL

APPROVED BY: TMR

ELECTRICAL DIAGRAMS AND SCHEMATICS

DATE: SEPTEMBER, 2013

SHEET HE-1.01

P:\OCPR\10001801 Final Design II\CAD\Current Drawings\Maurepas_HE-1.01.dwg, Oct 22, 2013 - 1:09:46PM, silas_cunningham

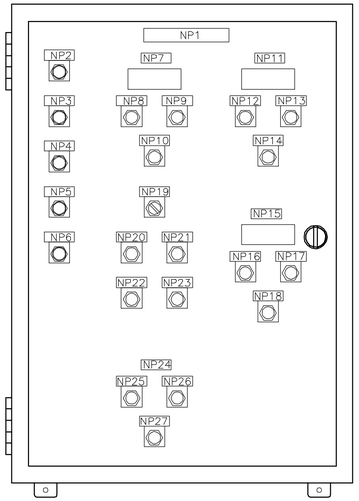

GATE CONTROL PANEL
FRONT VIEW
N.T.S.

NOTE:

CONTROL PANEL TO CONTAIN CONTROL TRANSFORMERS, MOTOR STARTERS, RELAYS, POWER SUPPLIES, TERMINAL BLOCKS, STRIP HEATER WITH THERMOSTAT AS REQUIRED.

NAMEPLATE SCHEDULE		DEVICE TYPE
N.P. NO.	LEGEND	
NP1	GATE CONTROL PANEL	NEMA 1 ENCLOSURE, HOFFMAN
NP2	CONTROL POWER ON	INDICATING LIGHT, ALLEN–BRADLEY
NP3	HYD FLUID FLOW LOW	INDICATING LIGHT, ALLEN–BRADLEY
NP4	HYD FLUID PRESSURE LOW	INDICATING LIGHT, ALLEN–BRADLEY
NP5	HYD FLUID LEVEL LOW	INDICATING LIGHT, ALLEN–BRADLEY
NP6	HYD FLUID LEVEL LOW LOW	INDICATING LIGHT, ALLEN–BRADLEY
NP7	GATE #1 POSITION	LED DIGITAL READOUT DISPLAY
NP8	GATE #1 UP	PUSHBUTTON, BLK OPER., ALLEN–BRADLEY
NP9	GATE #1 DOWN	PUSHBUTTON, BLK OPER., ALLEN–BRADLEY
NP10	GATE #1 STOP	PUSHBUTTON, RED OPER., ALLEN–BRADLEY
NP11	GATE #2 POSITION	LED DIGITAL READOUT DISPLAY
NP12	GATE #2 UP	PUSHBUTTON, BLK OPER., ALLEN–BRADLEY
NP13	GATE #2 DOWN	PUSHBUTTON, BLK OPER., ALLEN–BRADLEY
NP14	GATE #2 STOP	PUSHBUTTON, RED OPER., ALLEN–BRADLEY
NP15	GATE #3 POSITION	LED DIGITAL READOUT DISPLAY
NP16	GATE #3 UP	PUSHBUTTON, BLK OPER., ALLEN–BRADLEY
NP17	GATE #3 DOWN	PUSHBUTTON, BLK OPER., ALLEN–BRADLEY
NP18	GATE #3 STOP	PUSHBUTTON, RED OPER., ALLEN–BRADLEY
NP19	PUMP 1 – PUMP 2	2 POS. SEL. SW., MAINT., ALLEN–BRADLEY
NP20	HYD PUMP START	PUSHBUTTON, BLK OPER., ALLEN–BRADLEY
NP21	HYD PUMP STOP	PUSHBUTTON, RED OPER., ALLEN–BRADLEY
NP22	HYD PUMP 1 RUNNING	INDICATING LIGHT, ALLEN–BRADLEY
NP23	HYD PUMP 2 RUNNING	INDICATING LIGHT, ALLEN–BRADLEY
NP24	RAISE/LOWER ALL GATES	NAMEPLATE
NP25	UP	PUSHBUTTON, BLK OPER., ALLEN–BRADLEY
NP26	DOWN	PUSHBUTTON, BLK OPER., ALLEN–BRADLEY
NP27	STOP	PUSHBUTTON, RED OPER., ALLEN–BRADLEY

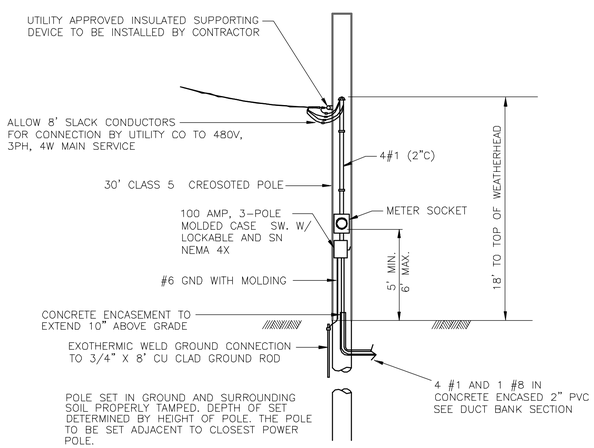

METERING POLE
N.T.S.

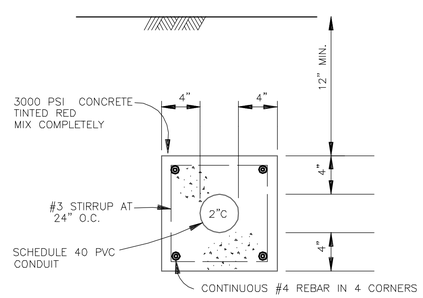

SECTION THRU DUCT BANK
N.T.S.

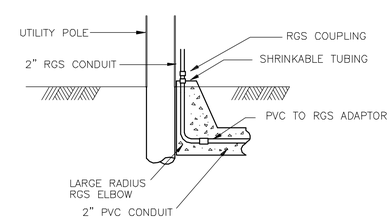

ELEC. SERVICE STUB–UP
N.T.S.

REV.	DATE	DESCRIPTION	BY
A	8/30/13	95% ISSUE	BRP

URS
3500 N. Causeway Blvd., Suite 900
Metairie, Louisiana 70002
(504) 837–6326

LOUISIANA COASTAL PROTECTION AND RESTORATION AUTHORITY
COASTAL ENGINEERING DIVISION
450 LAUREL STREET
BATON ROUGE, LOUISIANA 70802

MISSISSIPPI RIVER REINTRODUCTION INTO MAUREPAS SWAMP
ST. JOHN THE BAPTIST PARISH, LOUISIANA

P.O.-29 URS PROJECT NUMBER: 10001801

95% SUBMITTAL

ELECTRICAL DETAILS

DATE: SEPTEMBER, 2013

DRAWN BY: JMB | DESIGNED BY: BRP | APPROVED BY: TMR | SHEET HE-1.02

P:\OCPR\10001801 Final Design I\CAD\Current Drawings\Maurepas_HE-1.02.dwg, Oct 22, 2013 - 1:14:15PM, silas_cunningham

(A***) ANALOG CONDUCTORS

No.	CONDUCTORS	FROM	TO/REMARKS
A001	#16 TSP	ZIC-4100	FCP-SG
A002	#16 TSP	ZIC-4200	FCP-SG
A003	#16 TSP	ZIC-4300	FCP-SG
A004	RS-232	LIT-4600A	LCP-100
A005	RS-232	LIT-4600B	LCP-100
A006	---------	----------	----------
A007	---------	----------	----------
A008	---------	----------	----------
A009	---------	----------	----------

(C***) CONTROL CONDUCTORS

No.	CONDUCTORS	FROM	TO/REMARKS
C001	6#14,#14G	GEN SET START COMAND	ATC CONTROLS
C002	---------	----------	----------
C003	---------	----------	----------
C004	---------	----------	----------
C005	6#14,#14G	FCP-SG	LCP-SG
C006	2#12	LIT-4600A	LCP-100
C007	2#12	LIT-4600B	LCP-100
C008	---------	----------	----------
C009	---------	----------	----------
C010	---------	----------	----------

(H***) 480 VOLT CONDUCTORS

No.	CONDUCTORS	FROM	TO/REMARKS
H001	4#1,#8G-2"C	UTILITY TRANSFORMER	ATS
H002	4#1,#8G-2"C	GENERATOR	ATS
H003	4#1,#8G-2"C	ATS	PP1-ML
H004	3#4,#10G-1-1/2"C	FCP-SG	PP1-1
H005	3#10,#12G-3/4"C	T-LP1 PRIMARY	PP1-7
H006	----------	----------	----------
H007	----------	----------	----------

TAG:	PP1			AIC:	20,000
MAINS:	100A ML		TOP ENTRY	TVSS:	YES
SERVICE:	480V,3p,4W		* = GFCI CIRCUIT BREAKER	TRIM:	SURFACE
CKT	C/B	LOAD	LOAD	C/B	CKT
1	60/3	FCP-HYD-SLG	CNT BLGD OUTDOOR LGT	20/1	2
3	–	–	AREA POLE LIGHTING	20/1	4
5	–	–	SPARE	20/1	6
7	30/3	T-LP1	SPARE	20/1	8
9	–	–	SPACE	–	10
11	–	–	SPACE	–	12
13	20/3	SPARE	SPACE	–	14
15	–	–	SPACE	–	16
17	–	–	SPACE	–	18
19	–	SPACE	SPACE	–	20
21	–	–	SPACE	–	22
23	–	–	SPACE	–	24

TOTAL CONNECT
FLA ____
KVA ____

TAG:	LP1		SLUDGE PRESS CNT RM	AIC:	14,000
MAINS:	50A MB		TOP ENTRY	TVSS:	YES
SERVICE:	120/208V,3p,4W		* = GFCI CIRCUIT BREAKER	TRIM:	SURFACE
CKT	C/B	LOAD	LOAD	C/B	CKT
1	20/1	CONTROL RM RECPT	GEN BATTERY CHARGER	20/1	2
3	*20/1	OUTDOOR RECPT	GEN JACKET HEATER	30/1	4
5	20/1	SECURITY SYSTEM	LCT-1	20/1	6
7	20/1	CONTROL ROOM LIGHTING	INSTRUMENTATION	20/1	8
9	20/1	EMERGENCY EXIT LIGHT	LCP-100	20/1	10
11	20/1	SPARE	SPARE	20/1	12
13	20/1	SPARE	SPARE	20/1	14
15	20/1	SPARE	SPARE	20/1	16
17	20/1	SPARE	SPARE	20/1	18
19	–	SPACE	SPACE	–	20
21	–	SPACE	SPACE	–	22
23	–	SPACE	SPACE	–	24

TOTAL CONNECT
FLA ____
KVA ____

LIGHTING FIXTURE SCHEDULE

FIXTURE REF.	FIXTURE TYPE CATALOG DESCRIPTION	LAMP	VOLT.	MOUNTING
BA	EMERGENCY LIGHT: HOLOPHANE DESOTO M-60 NEMA 4X HOUSING, 12V LEAD CALCIUM BATTERIES, TWO GRAY LAMP HEADS, 25W LAMPS, 120V TIME DELAY RELAY	WITH UNIT	120	WALL 10'-0" AFF
FA	FLUORESCENT LUMINAIRE: HOLOPHANE HES SERIES UL LISTED, WET LOCATION, 4' STRIP FLUORESCENT, 20 GAUGE STEEL HOUSING, MIRO 4 REFLECTOR, SPREAD BEAM, 1 STANDARD MULTI VOLT ELECTRONIC BALLAST	2-F032	120	CEILING
HA	HID LUMINAIRE: GE DECASHIELD SPMM17P0A1AMC3DB UL1598 WET LOCATION, ACRYLIC 2" DROP LENS MULTI VOLTAGE BALLAST, POLYESTER POWDER PAINT FINISH, DARK BROWN POLE SIDE MOUNTING	175W PMH	277	POLE (TYPE PA)
HB	HID LUMINAIRE: HOLOPHANE WALLPACK IV W415AHP27SZ LAMP UL 1572 LISTED, WET LOCATION, THERMAL SHOCK RESISTANT, PRISMATIC GLASS REFRACTOR, BRONZE PAINT FINISH, STANDARD ENTRY, 277V BALLAST	150W HPS	277	WALL
PA	POLE FOR FIXTURE 'HA': GE ASSS12S0411DB 12' TALL, 4" SQUARE STRAIGHT STEEL, ANCHOR BASE, SINGLE LUMINAIRE, POLYESTER POWDER PAINT FINISH, DARK BROWN			ANCHOR

ELECTRICAL ABBREVIATIONS

AFF – ABOVE FINISHED FLOOR
AFG – ABOVE FINISHED GRADE
AIC – AMPS INTERRUPTING CAPACITY
ATS – AUTOMATIC TRANSFER SWITCH
C – CONDUIT
CPT – CONTROL POWER TRANSFORMER
CR – CORROSION RESISTANT, NEMA 4X
CT – CURRENT TRANSFORMER
CU – COPPER
EC – EMPTY CONDUIT
EF – EXHAUST FAN
EMH – ELECTRICAL MANHOLE
FCP – FURNISHED WITH EQUIPMENT
FVNR – FULL VOLTAGE, NON-REVERSING
FWE – FACTORY CONTROL PANEL (PROVIDED WITH EQUIPMENT)
G – GROUND
GFI – GROUND FAULT INTERRUPTING
GRC – GALVANIZED RIGID STEEL CONDUIT
LCP – LOCAL CONTROL PANEL (PROVIDED UNDER DIVISION 17)
LCT – LIGHTING CONTACTOR
MB – MAIN BREAKER
MCC – MOTOR CONTROL CENTER
MCCB – MOLDED CASE CIRCUIT BREAKER
MCP – MOTOR CIRCUIT PROTECTOR OR MAIN CONTROL PANEL
MH – MANHOLE
ML – MAIN LUGS
MLO – MAIN LUGS ONLY
NC – NORMALLY CLOSED
NO – NORMALLY OPEN
OL – OVERLOAD
P – PUMP
PB – PULLBOX
RVAT – REDUCED VOLTAGE AUTOTRANSFORMER
SF – SUPPLY FAN
SHLD – SHIELDED CABLE
SS – STAINLESS STEEL
SSRV – SOLID STATE REDUCED VOLTAGE
SV – SOLENOID VALVE
TSP – TWISTED, SHIELDED PAIR
TVSS – TRANSIENT VOLTAGE SURGE SUPPRESSOR
UH – UNIT HEATER
VFD – VARIABLE FREQUENCY DRIVE
WP – WEATHERPROOF, NEMA 4

ELECTRICAL SYMBOLS

– PANELBOARD, 240 VOLTS AND BELOW. SEE SCHEDULE
– PANELBOARD, ABOVE 240 VOLTS. SEE SCHEDULE
– DEVICE REQUIRING ELECTRICAL CONNECTION, TYPE AS INDICATED (INSTRUMENT DESIGNATIONS PER ISA)
– COMBINATION MOTOR STARTER, VOLTAGE/NEMA SIZE/NEMA ENCLOSURE
– NON-FUSED SAFETY SWITCH, AMPS/POLES/NEMA ENCLOSURE
– FUSED SAFETY SWITCH, AMPS/FUSE/POLES/NEMA ENCLOSURE
– TRANSFORMER, KVA RATING AS INDICATED ON ONE LINE DIAGRAM
– MOTOR, Hp AS INDICATED ON ONE LINE DIAGRAM OR ON PLAN
– GENERATOR, kW AS INDICATED ON ONE LINE DIAGRAM
– OUTLET BOX, JUNCTION BOX OR PULL BOX. LETTERS/NUMERALS INDICATE NEMA TYPE OTHER THAN NEMA 1
– CONTROL STATION
– FLUORESCENT FIXTURE. LETTERS DENOTE FIXTURE TYPE (TYPICAL). SHADING INDICATES NIGHTLIGHT (TYPICAL). NUMERAL INDICATES CIRCUIT NUMBER (TYPICAL). SUBSCRIPT CORRESPONDS WITH SIMILARLY IDENTIFIED SWITCH OR MULTI-WAY SWITCH GROUP (TYPICAL)
– LIGHTING FIXTURE, SURFACE ON OR PENDANT MOUNT FROM CEILING
– EXIT LIGHT SURFACE MOUNTED ON WALL, ARROWS INDICATE DIRECTION
– BATTERY POWERED EMERGENCY LIGHT
– PHOTOELECTRIC CELL
– DUPLEX RECEPTACLE, 18" AFF UNLESS OTHERWISE INDICATED. NUMERAL INDICATES CIRCUIT NUMBER (TYPICAL)
– DUPLEX RECEPTACLE, 48" AFF OR 6" ABOVE COUNTER TOP
– SINGLE POLE SWITCH, 48" AFF UNLESS OTHERWISE INDICATED. NUMERAL IN PARENTHESIS INDICATES CIRCUIT NUMBER (TYPICAL). SUBSCRIPT CORRESPONDS WITH SIMILARLY IDENTIFIED LIGHTING FIXTURES (TYPICAL)
– THREE WAY SWITCH, 48" AFF UNLESS OTHERWISE INDICATED
– MANUAL MOTOR STARTER, SINGLE POLE 1 Hp UNLESS OTHERWISE INDICATED
– WIRING IN CONDUIT CONCEALED IN OR UNDER FLOOR, OR UNDERGROUND CONCRETE ENCASED SINGLE CONDUIT DUCTBANK
– BRANCH CIRCUIT WIRING IN 3/4" CONDUIT HOMERUN AS INDICATED. ONE ARROW PER CIRCUIT. SLASHES INDICATE NUMBER OF CONDUCTORS, #12 UNLESS OTHERWISE INDICATED
– FLEXIBLE CONDUIT CONNECTION
– INDICATES CONDUCTORS IN 3/4" CONDUIT UNLESS OTHERWISE INDICATED:
"A" INDICATES ANALOG SIGNAL CONDUCTORS. SEE SCHEDULE.
"C" INDICATES DISCRETE OR CONTROL CONDUCTORS. SEE SCHEDULE.
"H" INDICATES POWER CONDUCTORS ABOVE 240 VOLTS. SEE SCHEDULE.
"L" INDICATES POWER CONDUCTORS 240 VOLTS AND BELOW. SEE SCHEDULE.
– UNDERGROUND ELECTRICAL DUCTBANK. SEE DETAIL (TYPICAL)
– GROUND ROD
– POWER POLE

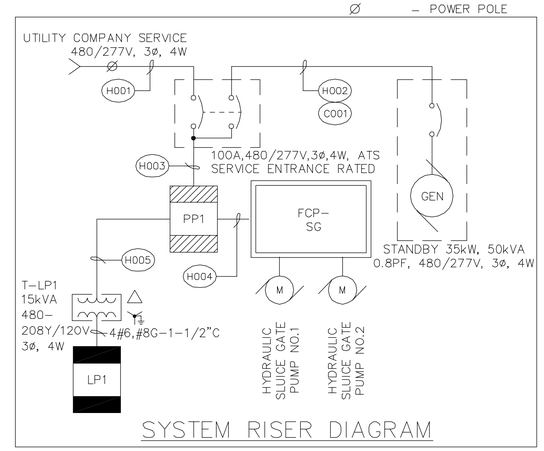

SYSTEM RISER DIAGRAM

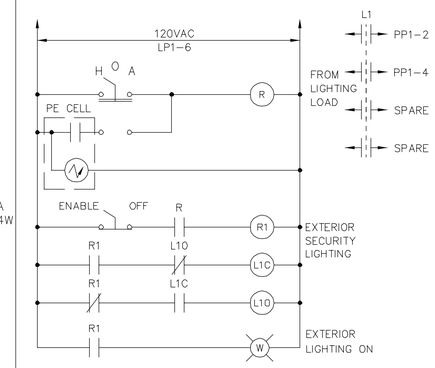

LCT-1 CONTROL DIAGRAM
MOUNT IN NEMA 12 ENCLOSURE

REV.	DATE	DESCRIPTION	BY
A	8/30/13	95% ISSUE	BRP

URS
3500 N. Causeway Blvd., Suite 900
Metairie, Louisiana 70002
(504) 837-6326

LOUISIANA COASTAL PROTECTION AND RESTORATION AUTHORITY
COASTAL ENGINEERING DIVISION
450 LAUREL STREET
BATON ROUGE, LOUISIANA 70802

MISSISSIPPI RIVER REINTRODUCTION INTO MAUREPAS SWAMP
ST. JOHN THE BAPTIST PARISH, LOUISIANA

P.O.-29 URS PROJECT NUMBER: 10001801

95% SUBMITTAL

ELECTRICAL LEGEND, RISER DIAGRAM & SCHEDULES

DATE: SEPTEMBER, 2013

DRAWN BY: RLS | DESIGNED BY: BRP | APPROVED BY: TMR | SHEET HE-1.03

P:\DCPR\10001801 Final Design II\CAD\Current Drawings\Maurepas_HE-1.03.dwg, Oct 22, 2013 - 1:14:54PM, silas_cunningham

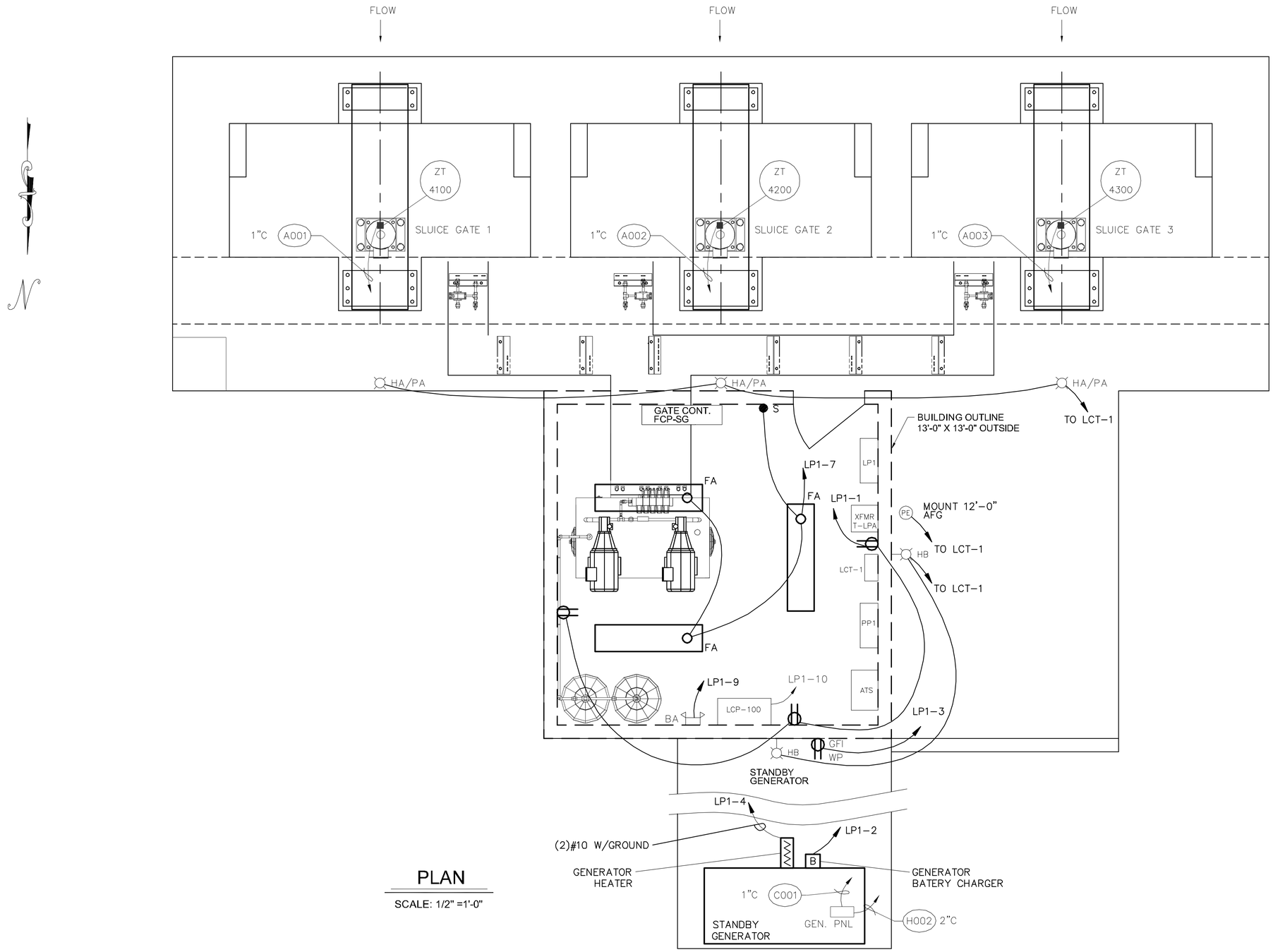

PLAN

SCALE: 1/2" =1'-0"

2' 1' 0 2'

SCALE: 1/2"= 1'-0"

REV.	DATE	DESCRIPTION	BY
A	8/30/13	95% ISSUE	BRP

URS

3500 N. Causeway Blvd., Suite 900
Metairie, Louisiana 70002
(504) 837-6326

LOUISIANA COASTAL PROTECTION AND RESTORATION AUTHORITY
COASTAL ENGINEERING DIVISION
450 LAUREL STREET
BATON ROUGE, LOUISIANA 70802

DRAWN BY: RLS | DESIGNED BY: BRP

MISSISSIPPI RIVER REINTRODUCTION INTO MAUREPAS SWAMP
ST. JOHN THE BAPTIST PARISH, LOUISIANA

P.O.-29 URS PROJECT NUMBER: 10001801

95% SUBMITTAL

APPROVED BY: TMR

POWER AND LIGHTING PLAN VIEW

DATE: SEPTEMBER, 2013

SHEET HE-1.04

P:\QCPR\10001801 Final Design II\CAD\Current Drawings\Maurepas_HE-1.04.dwg, Oct 22, 2013 - 1:15:28PM, silas_cunningham

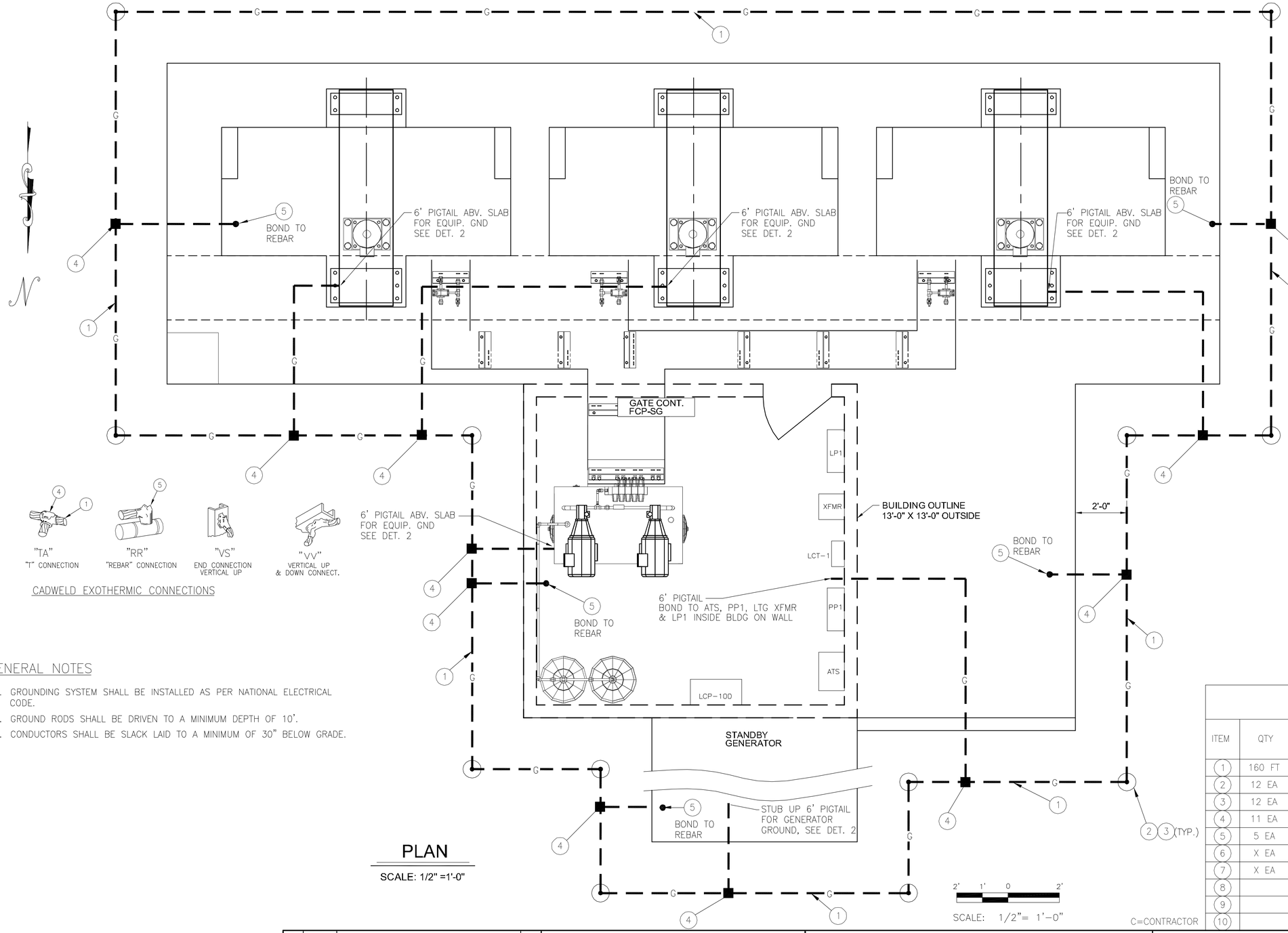

PLAN

SCALE: 1/2" =1'-0"

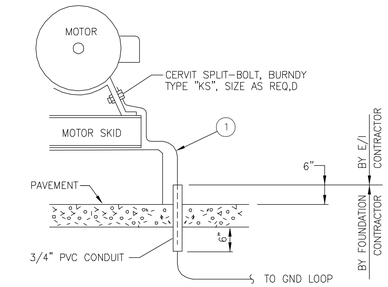

GROUNDING STUB-UP AT MOTOR OR EQUIP.

DET. 2 THIS DWG

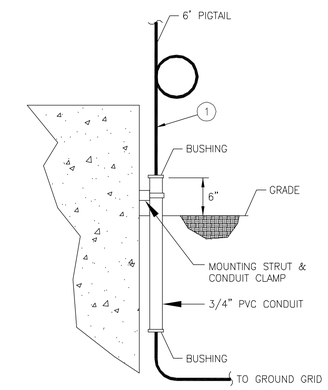

GROUNDING STUB-UP AT WALL

DET. 1 THIS DWG

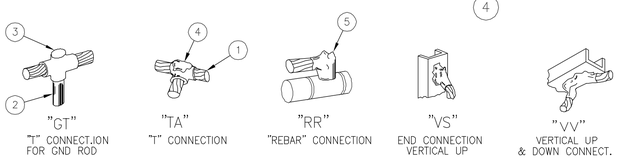

CADWELD EXOTHERMIC CONNECTIONS

GENERAL NOTES

1. GROUNDING SYSTEM SHALL BE INSTALLED AS PER NATIONAL ELECTRICAL CODE.
2. GROUND RODS SHALL BE DRIVEN TO A MINIMUM DEPTH OF 10'.
3. CONDUCTORS SHALL BE SLACK LAID TO A MINIMUM OF 30" BELOW GRADE.

BILL OF MATERIALS

ITEM	QTY	FURN. BY	DESCRIPTION
1	160 FT	C	"G", #4/0 BARE CU GROUND WIRE, SOFT DRAWN
2	12 EA	C	"GR", 3/4"x10' COPPER-CLAD GROUND ROD
3	12 EA	C	"GT", CADWELD #4/0 TO 3/4" GROUND ROD TEE
4	11 EA	C	"TA", CADWELD #4/0 TO #4/0 TEE
5	5 EA	C	"RR", CADWELD #4/0 TO REBAR
6	X EA	C	"VS", CADWELD #4/0 TO STEEL MEMBER
7	X EA	C	"VV", CADWELD #4/0 TO STEEL MEMBER
8			
9			
10			

C=CONTRACTOR

REV.	DATE	DESCRIPTION	BY
A	8/30/13	95% ISSUE	BRP

URS
3500 N. Causeway Blvd., Suite 900
Metairie, Louisiana 70002
(504) 837-6326

LOUISIANA COASTAL PROTECTION AND RESTORATION AUTHORITY
COASTAL ENGINEERING DIVISION
450 LAUREL STREET
BATON ROUGE, LOUISIANA 70802

MISSISSIPPI RIVER REINTRODUCTION INTO MAUREPAS SWAMP
ST. JOHN THE BAPTIST PARISH, LOUISIANA

P.O.-29 URS PROJECT NUMBER: 10001801

95% SUBMITTAL

GROUNDING PLAN VIEW

DRAWN BY: RLS | DESIGNED BY: BRP | APPROVED BY: TMR | DATE: SEPTEMBER, 2013 | SHEET HE-1.05

P:\OCPR\10001801 Final Design II\CAD\Current Drawings\Maurepas_HE-1.05.dwg, Oct 22, 2013 - 1:15:58PM, silas_cunningham

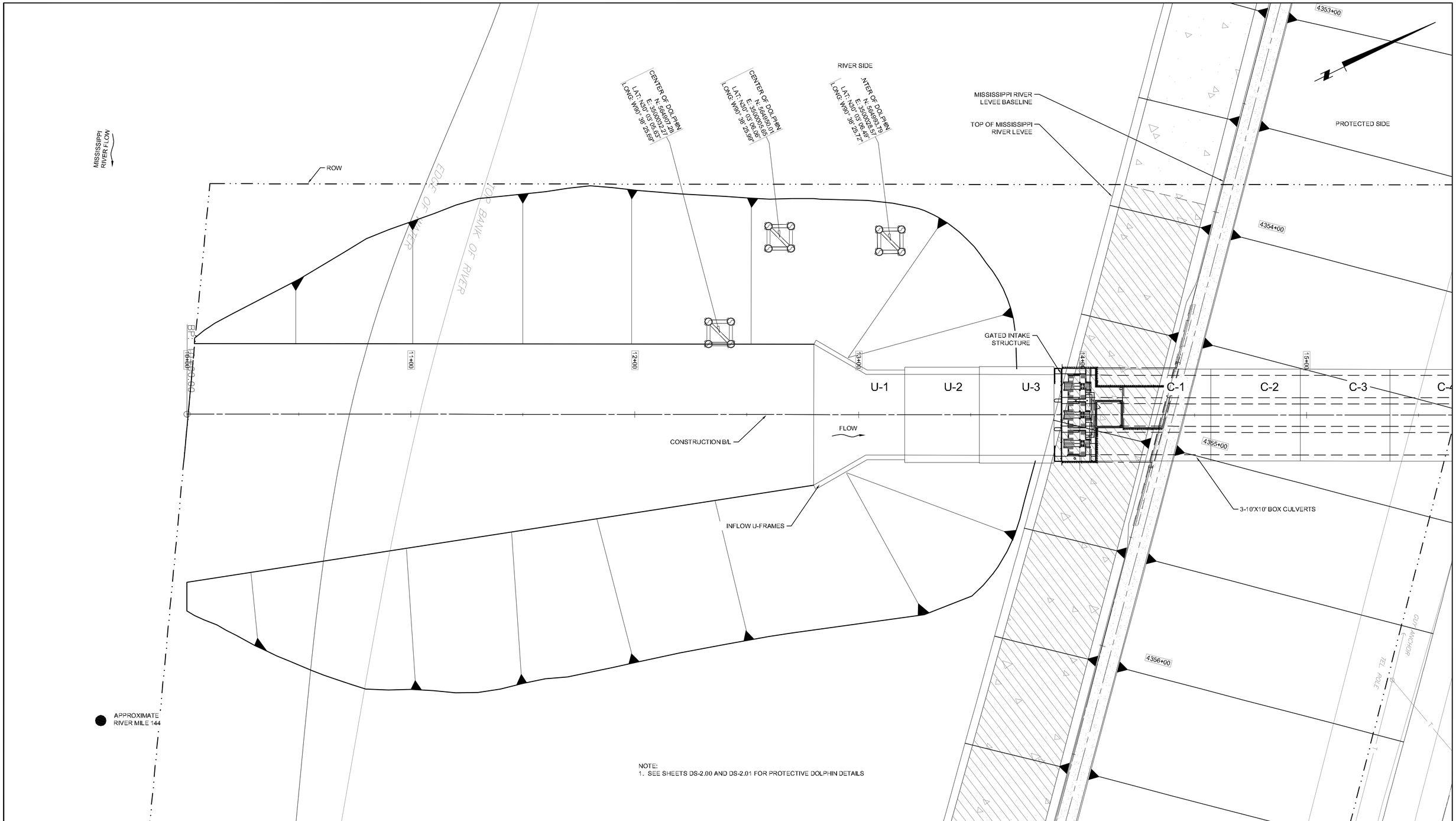

NOTE:
1. SEE SHEETS DS-2.00 AND DS-2.01 FOR PROTECTIVE DOLPHIN DETAILS

20' 10' 0 20'
SCALE:1"=20'-0"

REV.	DATE	DESCRIPTION	BY

URS
3500 N. Causeway Blvd., Suite 900
Metairie, Louisiana 70002
(504) 837-6326

LOUISIANA COASTAL PROTECTION AND RESTORATION AUTHORITY
COASTAL ENGINEERING DIVISION
450 LAUREL STREET
BATON ROUGE, LOUISIANA 70802

DRAWN BY: SDC III
DESIGNED BY: N.C.

MISSISSIPPI RIVER REINTRODUCTION INTO MAUREPAS SWAMP
ST. JOHN THE BAPTIST PARISH, LOUISIANA

P.O.-29 URS PROJECT NUMBER: 10001801

95% SUBMITTAL

APPROVED BY:

PROTECTIVE DOLPHIN LAYOUT

DATE: SEPTEMBER, 2013

SHEET DS-1.00

P:\OCPR\10001801 Final Design II\CAD\Current Drawings\Maurepas_DS-1.00_Protective Dolphins.dwg, Oct 22, 2013 - 11:23:27AM, silas_cunningham

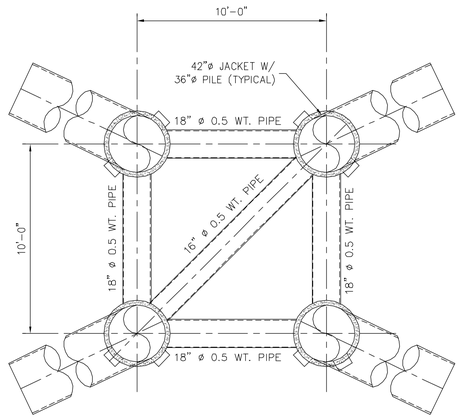

FRAMING PLAN @ T.O.E. EL 28'-10 3/4"

SCALE: 1/4" = 1'-0"

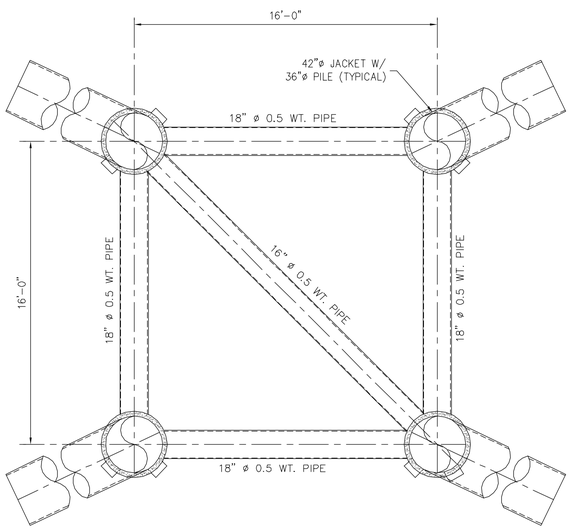

FRAMING PLAN @ T.O.E. EL 20'-0"

SCALE: 1/4" = 1'-0"

NOTES

1. COAT JACKET, BRACES, AND UPPER 85'-0" OF PILES WITH 16 MILS COAL TAR EPOXY.-SEE SPECS.
2. GROUT FILL ANNULUS- TYPICAL ALL JACKET LEGS.
3. 42"ø JACKET LEGS AND ALL 16"ø BRACES SHALL HAVE A MINIMUM YIELD STRESS OF 50 KSI. ALL OTHER MEMBERS SHALL HAVE A MINIMUM YIELD STRESS OF 36 KSI.

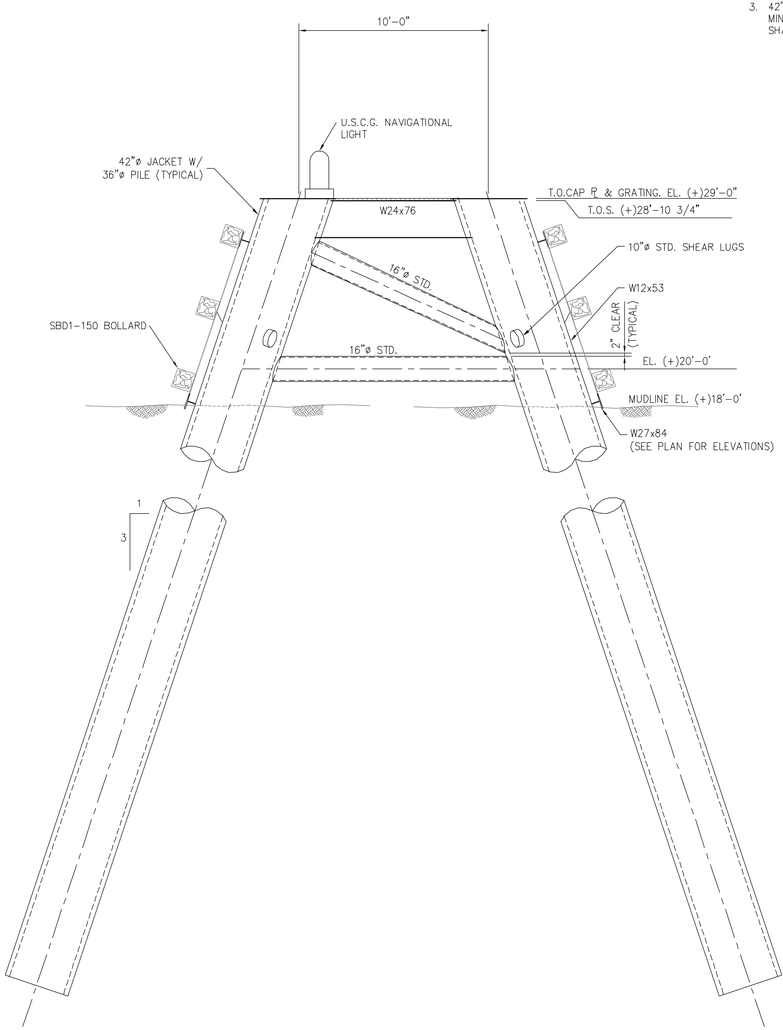

BACKSIDE ELEVATION

SCALE: 1/4" = 1'-0"

4' 2' 0 4'

SCALE:1/4"=1'-0"

REV.	DATE	DESCRIPTION	BY

URS

3500 N. Causeway Blvd., Suite 900
Metairie, Louisiana 70002
(504) 837-6326

LOUISIANA COASTAL PROTECTION AND RESTORATION AUTHORITY
COASTAL ENGINEERING DIVISION
450 LAUREL STREET
BATON ROUGE, LOUISIANA 70802

DRAWN BY: SDC III
DESIGNED BY: B.G.

MISSISSIPPI RIVER REINTRODUCTION INTO MAUREPAS SWAMP
ST. JOHN THE BAPTIST PARISH, LOUISIANA

P.O.-29 URS PROJECT NUMBER: 10001801

95% SUBMITTAL

APPROVED BY:

DOLPHIN FRAMING PLANS AND ELEVATION

DATE: SEPTEMBER, 2013

SHEET DS-2.00

P:\OCPR\10001801 Final Design III\CAD\Current Drawings\Maurepas_DS-2.00_Protective Dolphins_Elevation.dwg, Oct 22, 2013 - 11:24:17AM, silas_cunningham