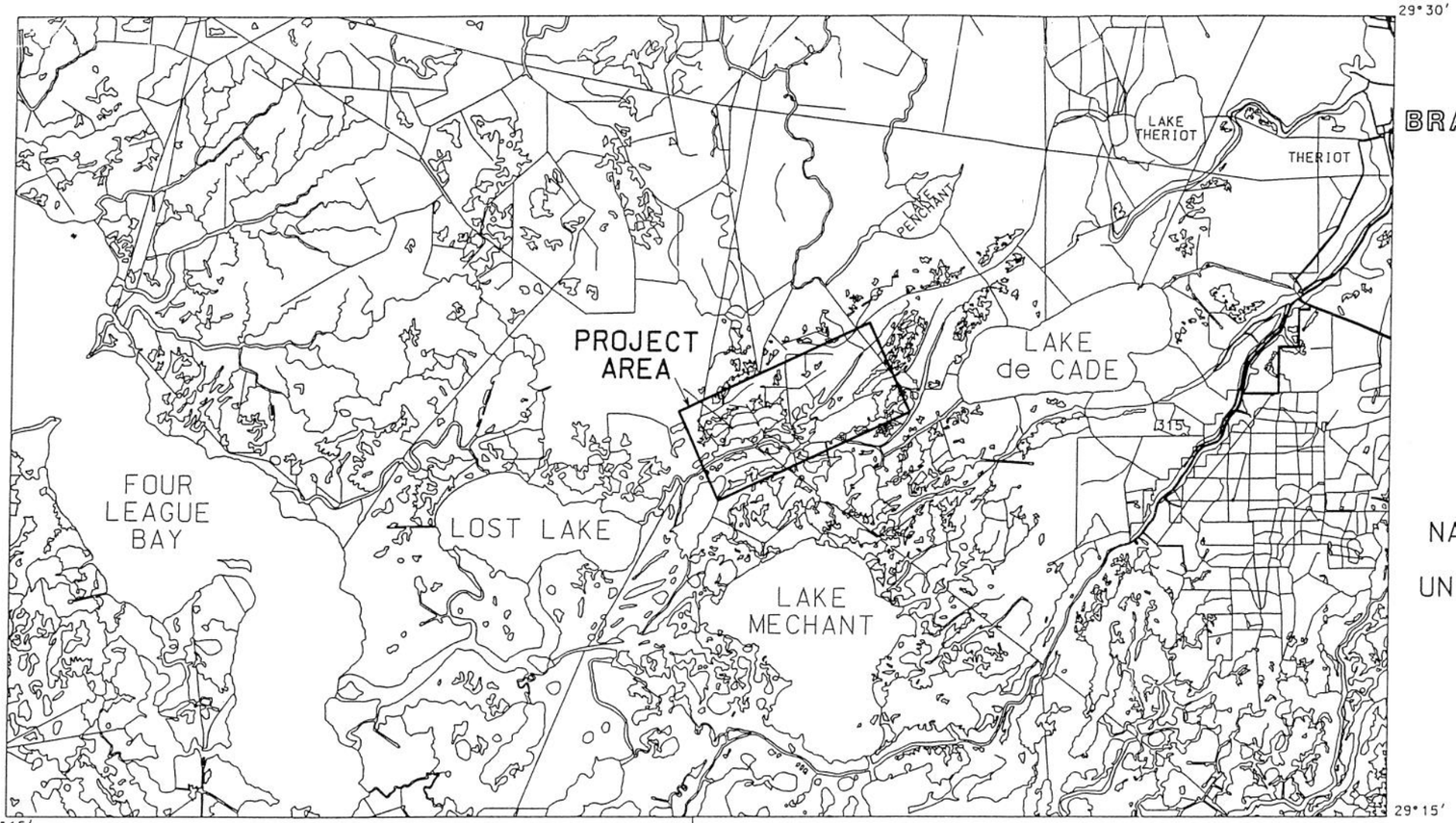

BRADY CANAL HYDROLOGIC RESTORATION

CONSTRUCTION UNIT 2,(PTE-26B)

BUILT UNDER THE
COASTAL WETLANDS
PLANNING, PROTECTION,
AND
RESTORATION ACT
PUBLIC LAW 101-646

BY THE
LOUISIANA
DEPARTMENT OF NATURAL RESOURCES

WITH THE ASSISTANCE OF THE
NATURAL RESOURCES CONSERVATION SERVICE
OF THE
UNITED STATES DEPARTMENT OF AGRICULTURE
1999

VICINITY MAP

1 0 1 2 3
SCALE IN MILES

LOCATION
IN
LOUISIANA

N

COPY

INDEX OF DRAWINGS

1 COVER SHEET
2 LAND RIGHTS WORK MAP
3 PROJECT LOCATION MAP
4 INDIVIDUAL SITE LOCATION MAP
5 SOIL BORING LOGS
6 PLAN AND PROFILE - SITE NO. 6
7 BATTER PILE DETAILS - SITE NO. 6
8 PLAN AND PROFILE - SITE NO.7
9 PLAN AND PROFILE - SITE NO.10
10 PLAN AND PROFILE - SITE NO. 14
11 DECKING DETAILS - SITE NO. 14
12 PLAN AND PROFILE - SITE NO. 20
13 PLAN AND PROFILE - SITE NO. 21
14 DECKING DETAILS - SITE NO. 21
15 PLAN AND PROFILE - SITE NO. 23
16 DECKING DETAILS - SITE NO. 23
17 PLAN AND PROFILE - SITE NO. 24
18 STOP LOG BAY DETAILS (TYPICAL)
19 PILE CAP TO SHEET PILE - DETAILS
20 WARNING SIGN LOCATION MAP
21 WARNING SIGN DETAILS
22 WARNING SIGN AND RAILING DETAILS
23 TYPE "F" WARNING SIGN DETAILS

STATE OF LOUISIANA
GIERING, II
REG. NO. 8933
REGISTERED
PROFESSIONAL ENGINEER
IN
CIVIL ENGINEERING

Approved by _____ Date 3/9
Title _____
Title _____

Designed C. E. LaFleur 02/98
Drawn A. J. Gremillion 02/98
Traced _____
Checked James N. Moore 01/99

COVER SHEET
CONSTRUCTION UNIT NO. 2
BRADY CANAL HYD. REST. - PTE-26B
TERREBONNE PARISH, LOUISIANA

U.S. DEPARTMENT OF AGRICULTURE - NATURAL RESOURCES CONSERVATION SERVICE

REVISIONS
DATE | APPR. | TITLE

CAD FILE NO.
LA-231

DRAWING NO.
231_01

SHEET NO 1 OF 23

c:\drawils\231\231_01.dgn Feb 14, 1999 17:26:25

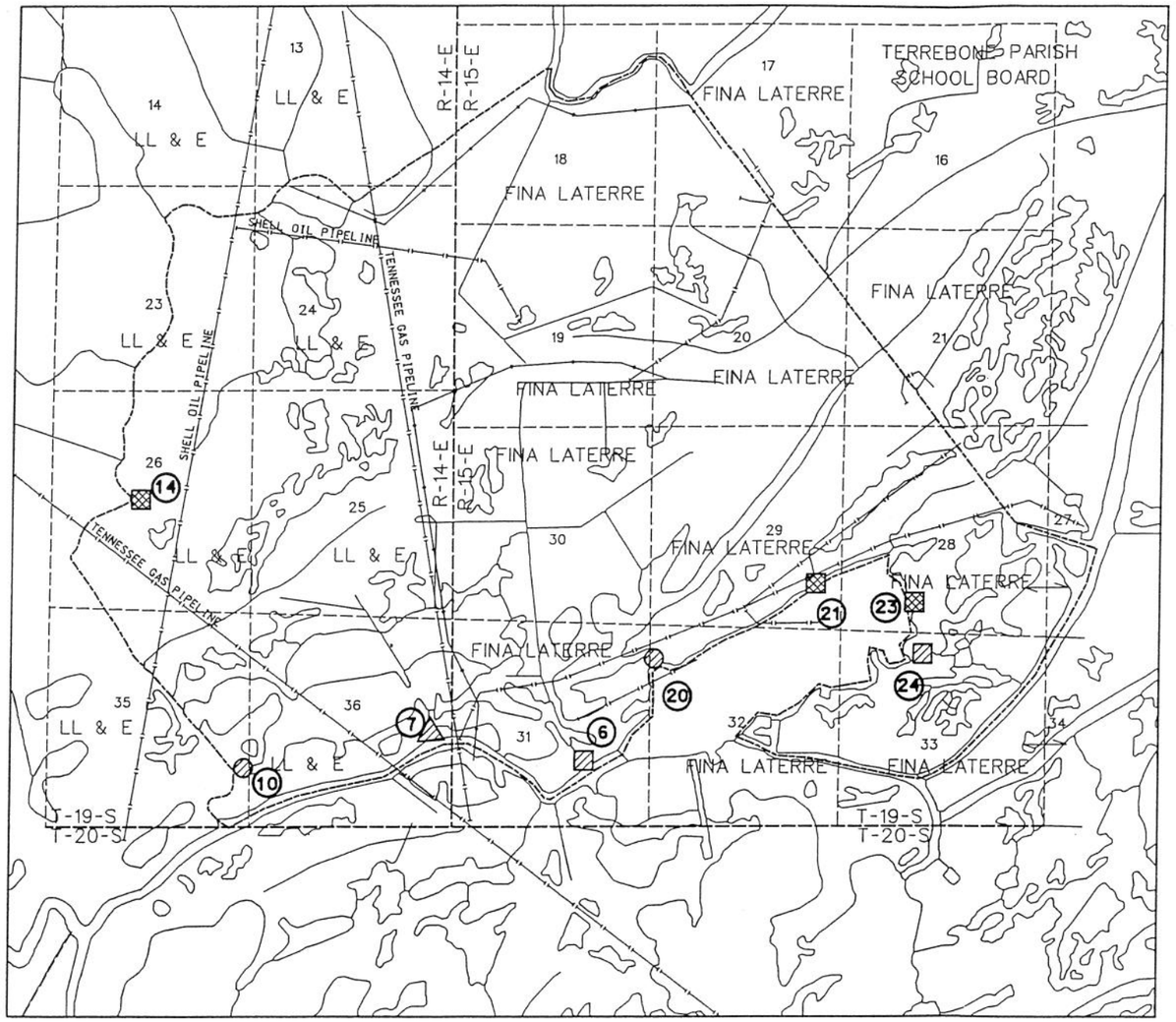

BRADY CANAL - LAND RIGHTS MAP

2000 0 2000 4000
Scale in Feet

STRUCTURE LEGEND

- FIXED CREST WEIR W/VARIABLE CREST SECTIONS
- FIXED CREST WEIR
- CHANNEL ARMOR
- ROCK PLUG

NOTE

THE SERVICE DOES NOT GUARANTEE THE COMPLETENESS AND ACCURACY OF OWNERSHIP SHOWN. APPARENT OWNERSHIP HAS BEEN OBTAINED FROM MAPS IN THE OFFICE OF PARISH CLERK OF COURT OR TAX ASSESSOR.

NOTE:
KNOWN PIPELINES AND UTILITIES ARE SHOWN ON THE PLANS. IT IS POSSIBLE THAT SOME MAY EXIST THAT HAVE NOT BEEN SHOWN. THE CONTRACTOR SHALL BE ON THE ALERT FOR SUCH PIPELINES AND UTILITES. AND SHALL REPORT THEM IMMEDIATELY TO THE CONTRACTING OFFICER.

NOTICE:
48 HOURS BEFORE DIGGING
CALL 1-800-272-3020
TO LOCATE UTILITY LINES

LEGEND

- PIPELINE
- POWERLINE
- TOWNSHIP / RANGE LINE
- SECTION LINE
- 23 — SECTION NUMBER
- WORK LIMITS
- (14) — STRUCTURE NUMBER

STATE OF LOUISIANA
E. J. GIERLING III
REG. NO. 8033
REGISTERED PROFESSIONAL ENGINEER IN CIVIL ENGINEERING

N

Date 3/99
Approved by
Title

Date 07/94
Designed C. E. LaFleur
Drawn A. J. Gremillion 07/94
Traced
Checked JAMES N. MOORE 02/99
Title

LAND RIGHTS MAP
CONSTRUCTION UNIT NO. 2
BRADY CANAL HYD. REST. - PTE-26B
TERREBONNE PARISH, LOUISIANA

U.S. DEPARTMENT OF AGRICULTURE - NATURAL RESOURCES CONSERVATION SERVICE

REVISIONS		
DATE	APPR.	TITLE

CAD FILE NO.
BRADY-LR
DRAWING NO.
LA-231
SHEET NO 2 OF 23

c:\drawlla_231\bradwlr.dgn Feb 14 1999 17:35:36

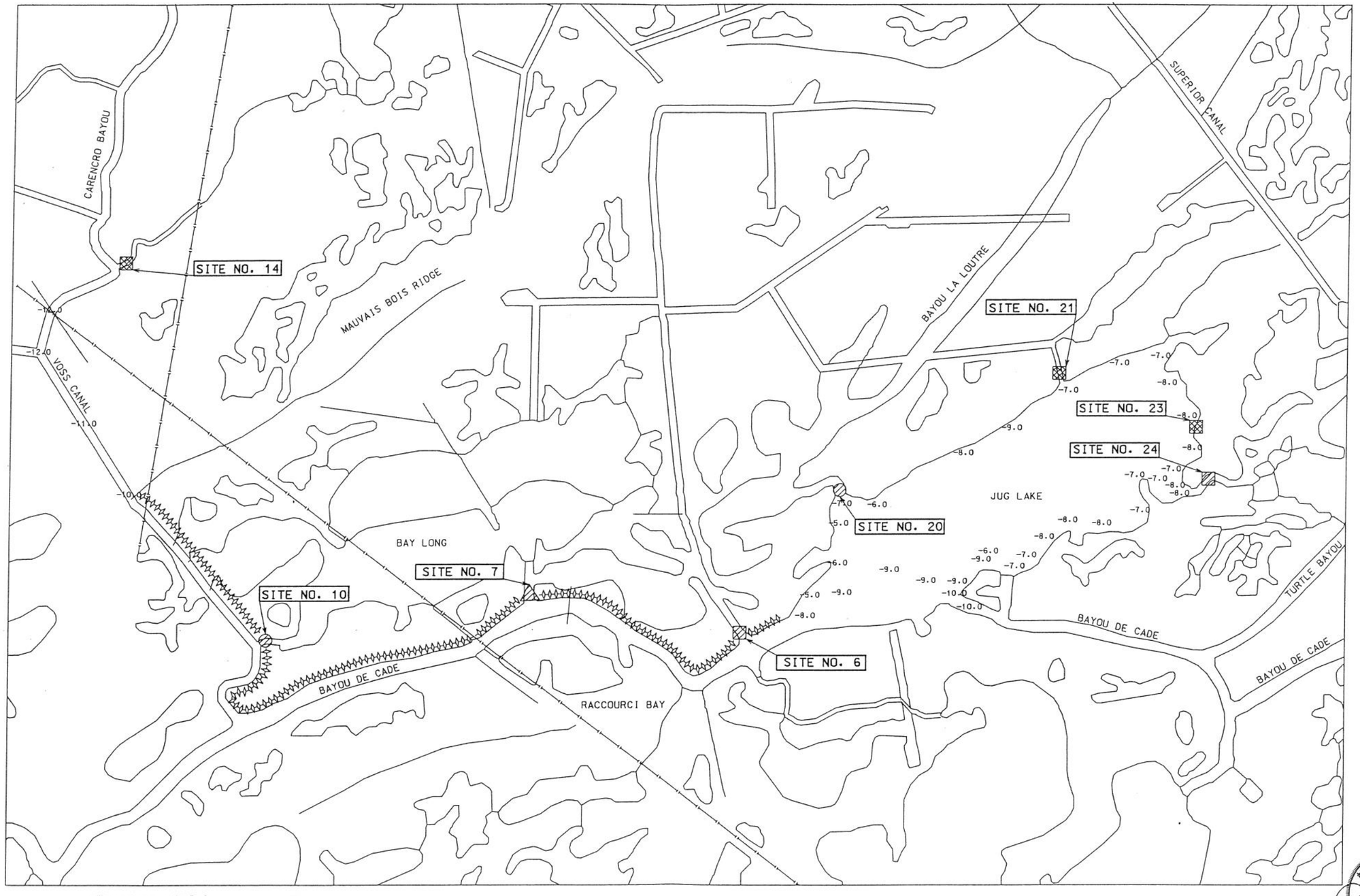

STRUCTURE LEGEND

- FIXED CREST WEIR W/VARIABLE CREST SECTIONS
- FIXED CREST WEIR
- CHANNEL ARMOR
- ROCK PLUG
- EMBANKMENT- (SEE CONSTRUCTION 1 UNIT FOR DETATILS)

PROJECT LOCATION MAP

1000 0 1000 2000 3000 4000
SCALE IN FEET

NOTES:
1. -X.X= WATER SOUNDING
2. ALL WATER SOUNDINGS WERE TAKEN ON 4/17/98. THE STAFF GAUGE AT OULARGE MARINA READ 1.8' NGVD.
3. ALL ELEVATIONS ARE BASED ON THE N.A.V.D. 88 DATUM.

STATE OF LOUISIANA
E. J. GIERING III
REG. NO. 4031
REGISTERED PROFESSIONAL ENGINEER IN CIVIL ENGINEERING

		Date
Designed	C. E. LaFleur	02/98
Drawn	A. J. Gremillion	02/98
Traced		
Checked	James N. Moore	01/99

Approved by _____ Date 3/99
Title _____
Title _____

PROJECT LOCATION MAP
CONSTRUCTION UNIT NO. 2
BRADY CANAL HYD. REST. - PTE-26B
TERREBONNE PARISH, LOUISIANA

U.S. DEPARTMENT OF AGRICULTURE - NATURAL RESOURCES CONSERVATION SERVICE

REVISIONS

DATE	APPR.	TITLE

CAD FILE NO. PROJECT-2
DRAWING NO. LA-231
SHEET NO 3 OF 23

c:\ldrawla-231\pnwct2.dgn Feb 14, 1999 17:39:31

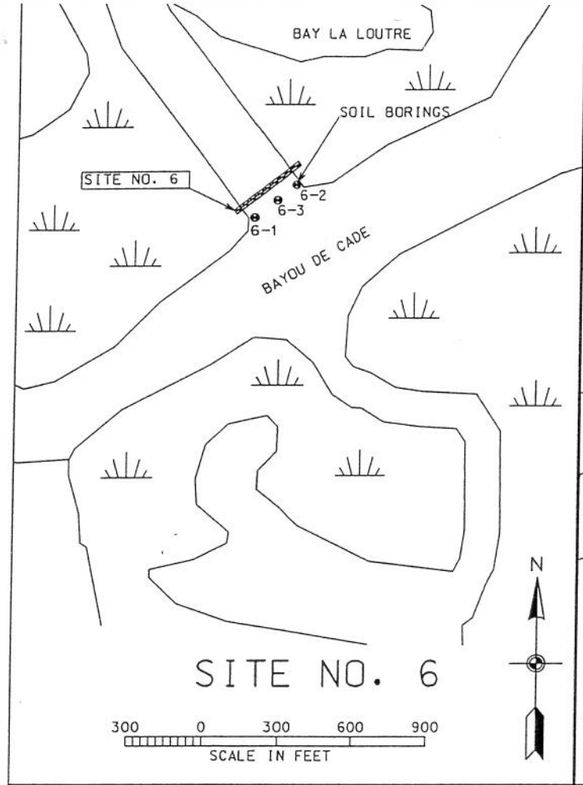

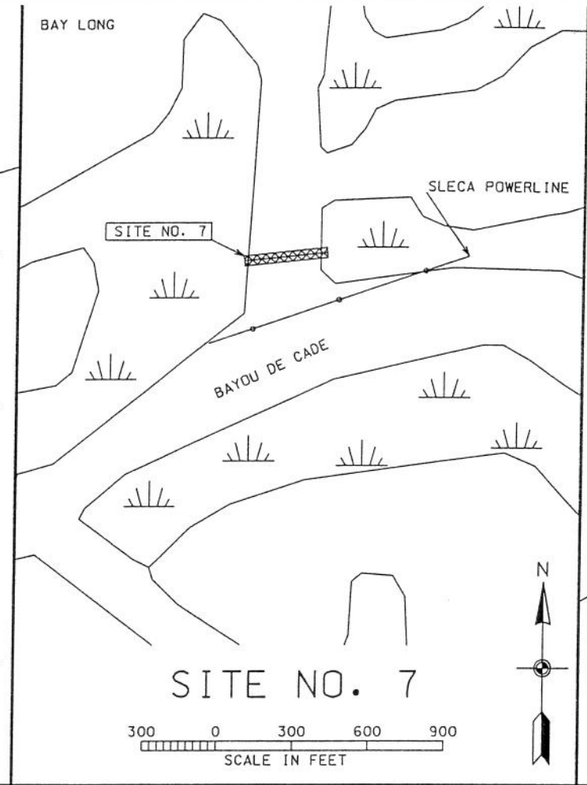

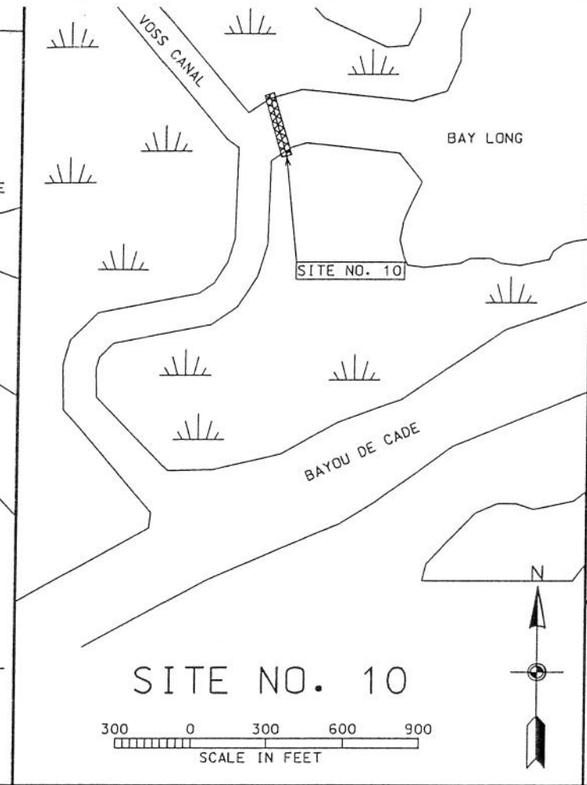

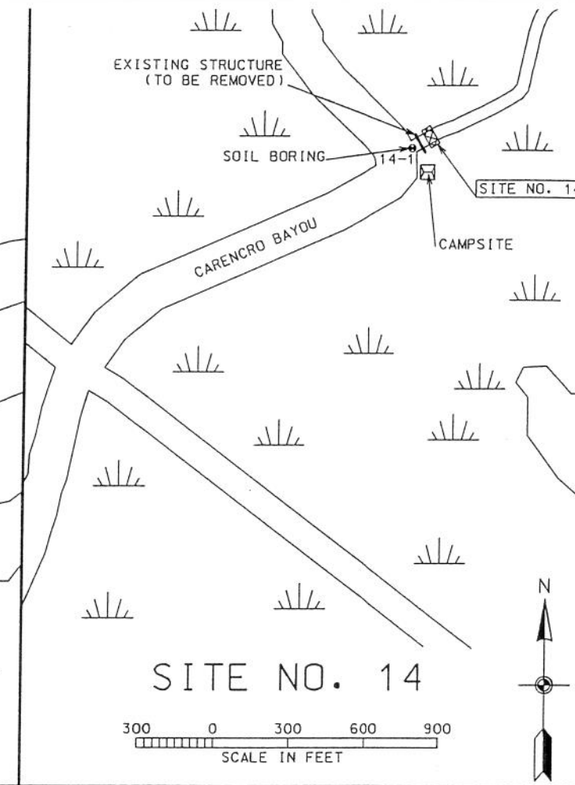

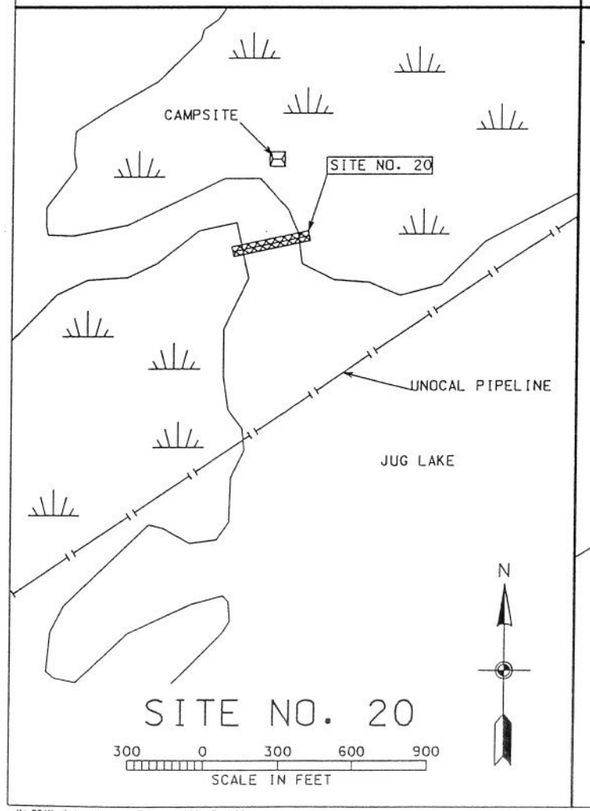

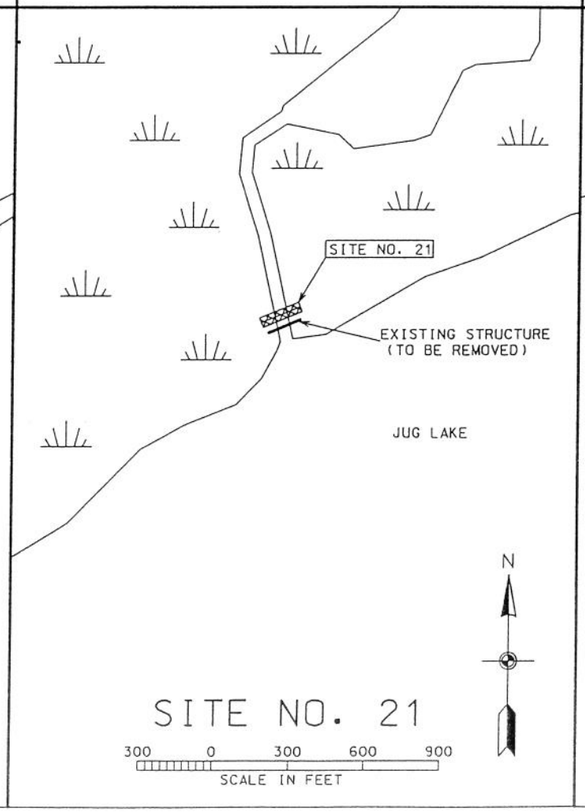

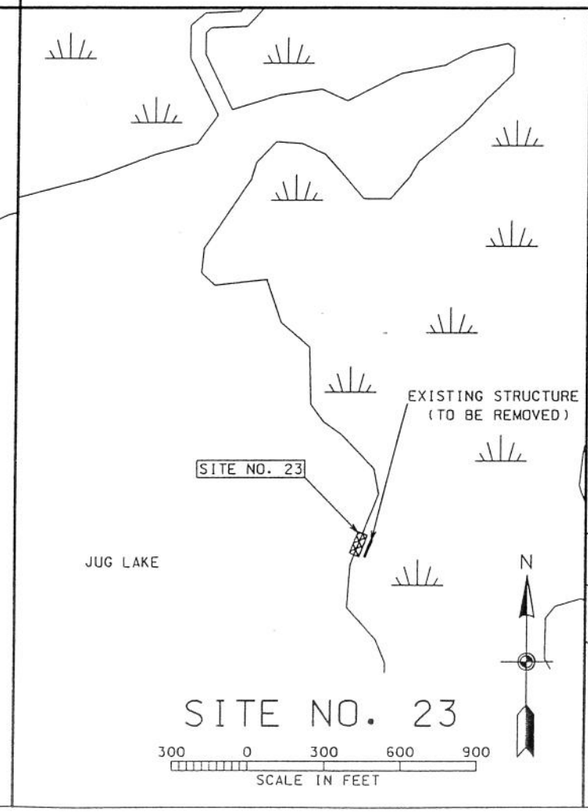

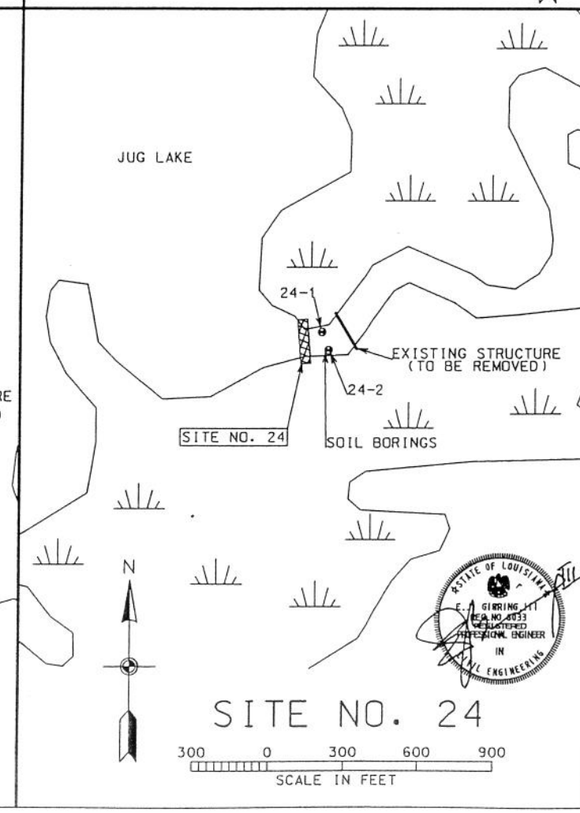

Date 3/98
Approved by
Title

Date 02/98
Designed C. E. LaFleur
Drawn A. J. Gremillion 02/98
Traced
Checked James N. Moore 01/99

INDIVIDUAL SITE LOCATIONS
CONSTRUCTION UNIT NO. 2
BRADY CANAL HYD. REST. - PTE-26B
TERREBONNE PARISH, LOUISIANA

U.S. DEPARTMENT OF AGRICULTURE - NATURAL RESOURCES CONSERVATION SERVICE

DATE	APPR.	REVISIONS TITLE

CAD FILE NO.
INDIV-LOCATION
DRAWING NO.
LA-231
SHEET NO 4 OF 23

la-231indivlocation.dgn Feb 14, 1999 17:44:00

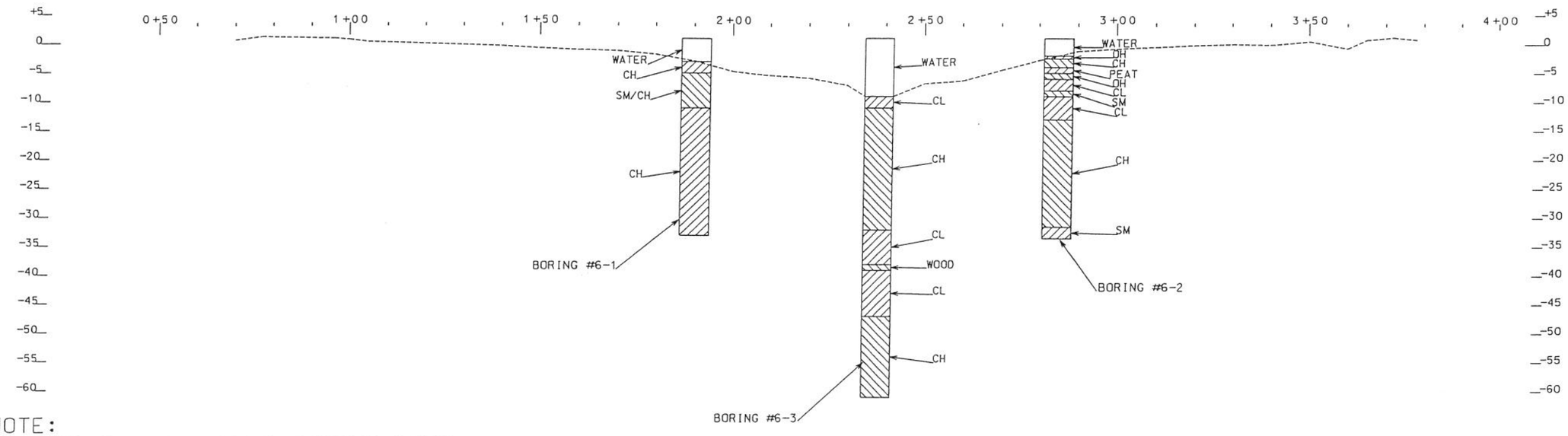

NOTE:
SOIL BORINGS AND X-SECTIONS WERE TAKEN AT DIFFERENT LOCATIONS, AS A RESULT THERE MAY BE SOME ELEVATION DISCREPANCY.

SITE NO. 6 BORING LOGS

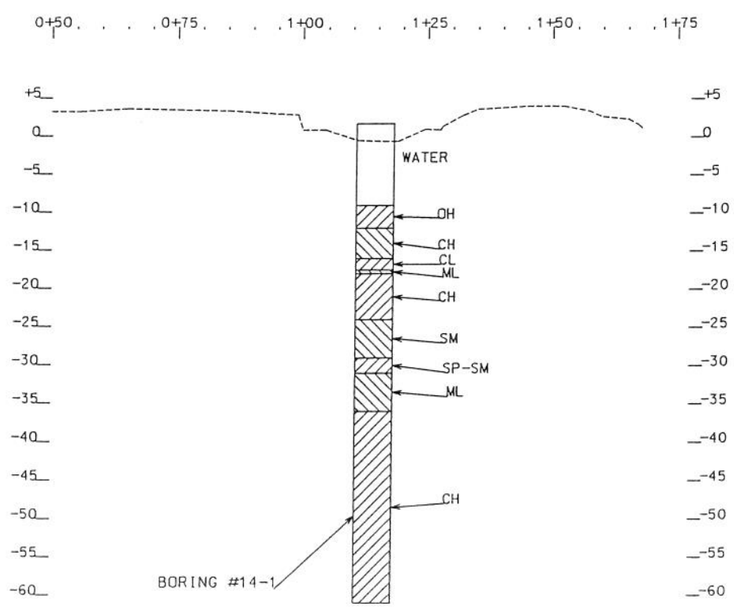

SITE NO. 14 BORING LOGS

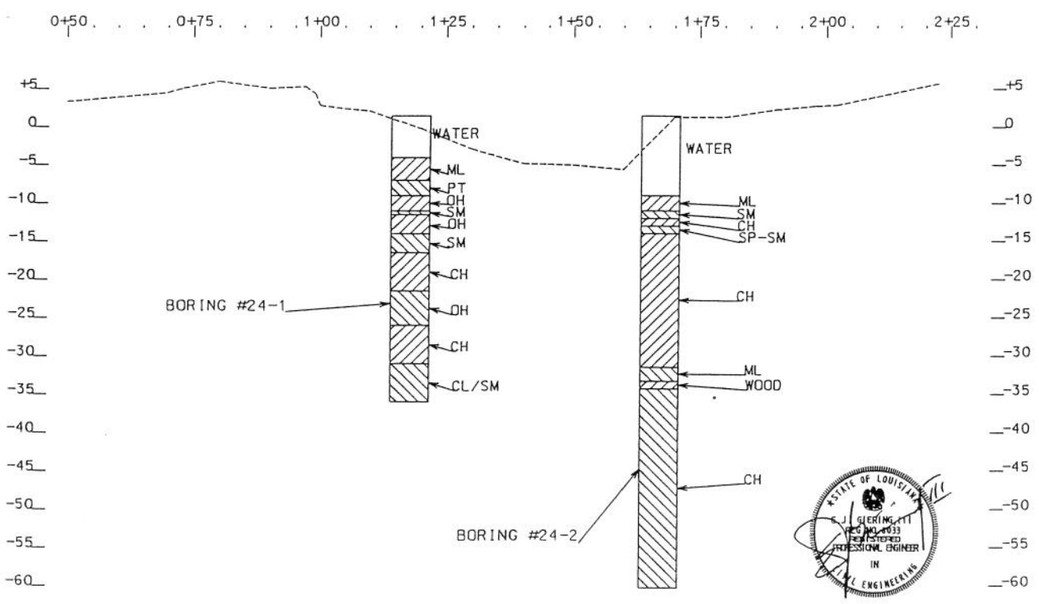

SITE NO. 24 BORING LOGS

Approved by _____ Date 3/5

		Date
Designed	C.E. LaFleur	2/98
Drawn	A. J. Gremillion	2/98
Traced		
Checked	James N. Moore	01/99

Title _____
Title _____

SOIL BORING LOGS
CONSTRUCTION UNIT NO. 2
BRADY CANAL HYD. REST. - PTE-26B
TERREBONNE PARISH, LOUISIANA

U.S. DEPARTMENT OF AGRICULTURE - NATURAL RESOURCES CONSERVATION SERVICE

REVISIONS		
DATE	APPR.	TITLE

CAD FILE NO.
BORE-6-14-24
DRAWING NO.
LA-231
SHEET NO 5 OF 23

\\drawla-231\bore-6-14-24 Mon Feb 14 1999 12:46:20

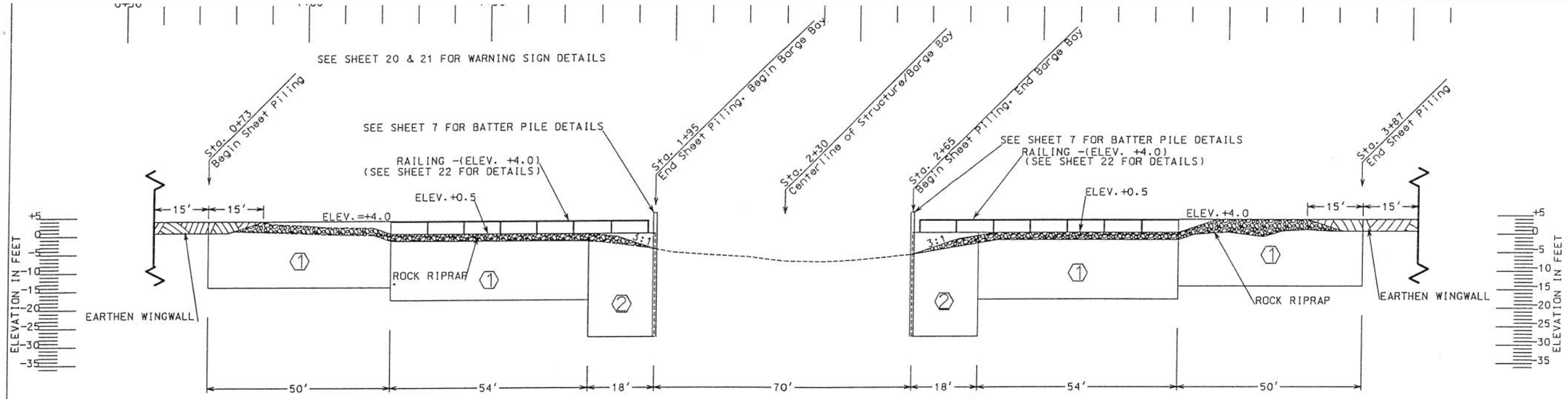

CONSTRUCTION LIMITS	
Construction Width	Construction Length
250 ft	500 ft
ESTIMATED QUANTITIES	
Rock Riprap	580 Tons
Geotextile	990 SY

SITE NO. 6 - PROFILE ON CENTERLINE

SHEET PILE SCHEDULE

SHEET PILING NO.	IN-PLACE LENGTH	LINEAR FEET	MINIMUM IN^3/FT	SUBTOTALS (FT. SQ)
①	18'	208'	17	3744
②	28'	36'	17	1008

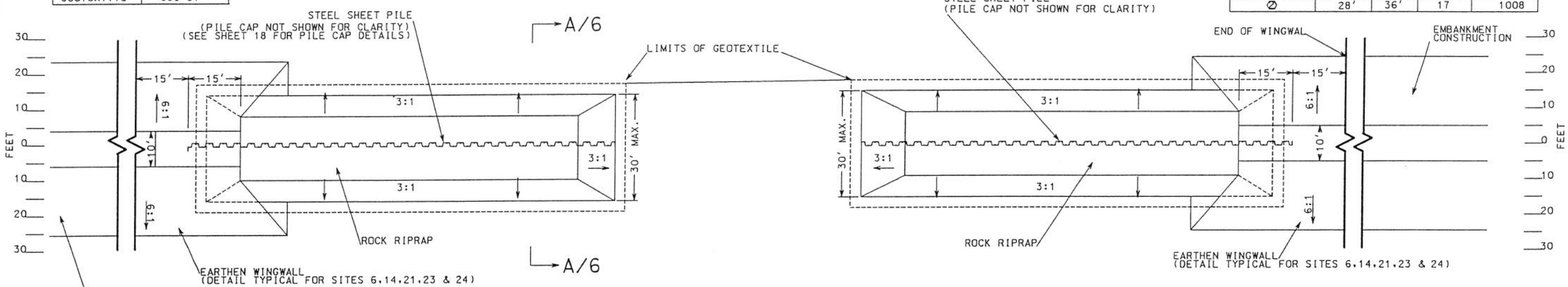

SITE NO. 6 - PLAN VIEW

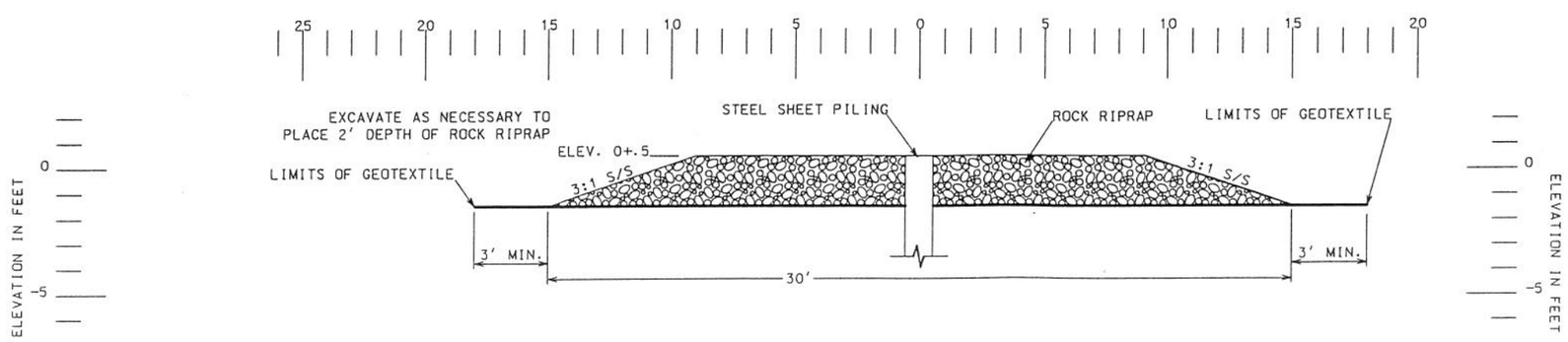

SECTION "A-A/6"

NOTE:

1. SHEET PILING AND PILE CAP SHALL BE PAINTED TO THE LIMITS SPECIFIED IN CONSTRUCTION SPECIFICATION 82, CLEANING AND PAINTING METALWORK.
2. THE MINIMUM WEB AND FLANGE THICKNESS OF SHEET PILING SHALL BE 0.35".
3. THE CONTRACTOR SHALL ENSURE THAT THE EARTHEN WINGWALLS SHALL BE CONSTRUCTED TO THE LINES AND GRADES AS SHOWN FOR SITE NO. 6, AS A MINIMUM, FOR ALL SHEET PILE STRUCTURES.
4. FINAL LOCATION OF STRUCTURES TO BE STAKED IN THE FIELD BY THE C.O.T.R.
5. SEE SHEETS 20 AND 21 FOR WARNING SIGN LOCATIONS & DETAILS
6. THE EARHTEN WINGWALLS SHALL BE TIED INTO THE EARTHEN EMBANKMENT.

STATE OF LOUISIANA
E.J. GWERING III
REGISTERED PROFESSIONAL ENGINEER IN CIVIL ENGINEERING

(NOT TO SCALE)

Approved by [signature] Date 3/9
Title
Title

Designed C.E. LaFleur 2/98
Drawn A. J. Gremillion 2/98
Traced
Checked James N. Moore 2/99

PLAN AND PROFILE - SITE NO. 6
CONSTRUCTION UNIT NO. 2
BRADY CANAL HYD. REST. - PTE-26B
TERREBONNE PARISH, LOUISIANA

U.S. DEPARTMENT OF AGRICULTURE - NATURAL RESOURCES CONSERVATION SERVICE

REVISIONS		
DATE	APPR.	TITLE

CAD FILE NO. SITE#6
DRAWING NO. LA-231
SHEET NO 6 OF 23

c:\1drawils.231\site6.dgn Mar 03 1999 11:07:42

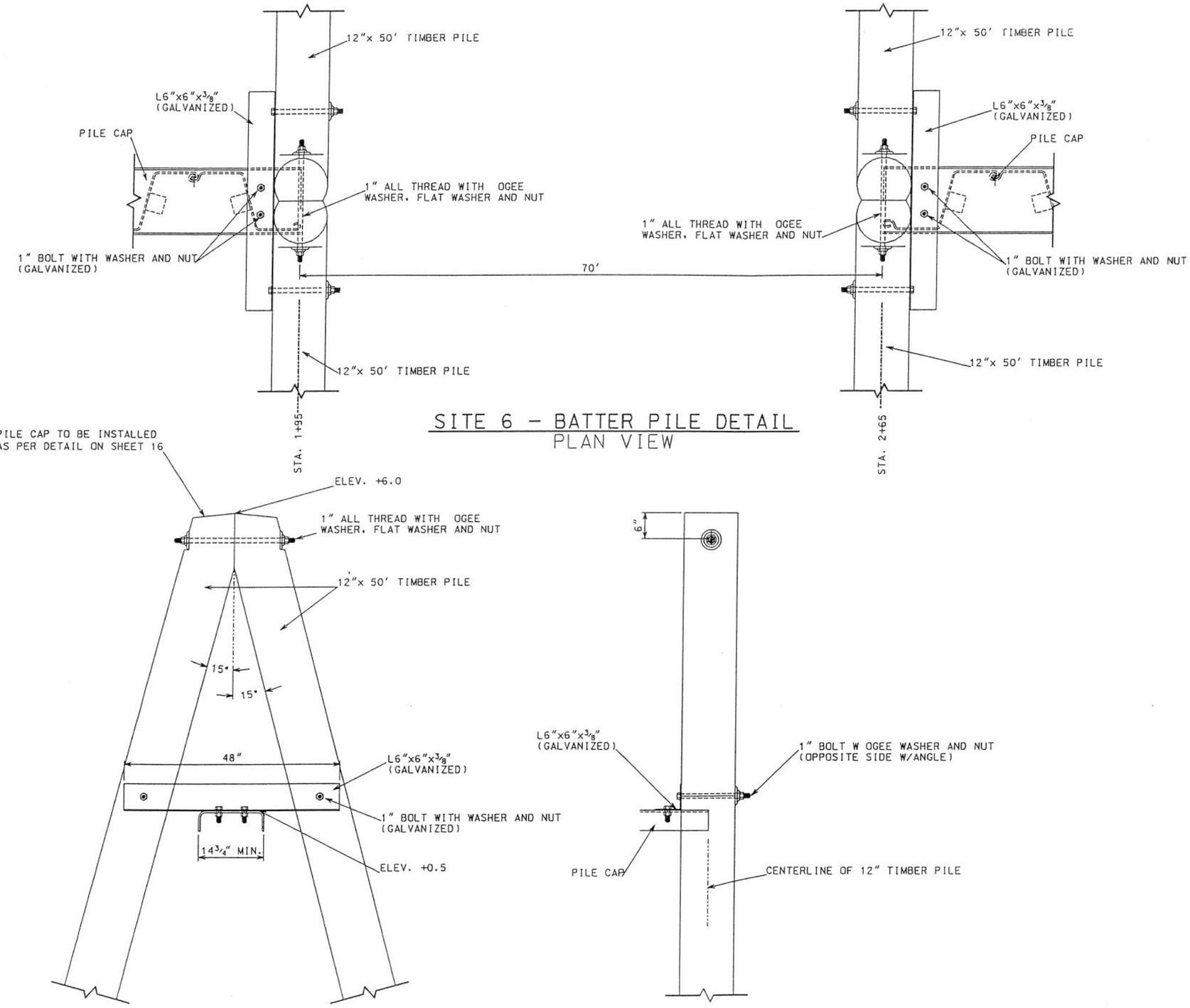

SITE 6 - BATTER PILE DETAIL
PLAN VIEW

SITE 6 - BATTER PILE DETAIL
ELEVATION VIEW

SITE 6 - BATTER PILE DETAIL
SIDE VIEW

		Date
Designed	C.E.LaFleur	2/98
Drawn	A. J. Gremillion	2/98
Traced		
Checked	James N. Moore	2/99

Approved by _____ Title _____ Title _____

SITE #6 - BATTER PILE DETAILS
CONSTRUCTION UNIT NO. 2
BRADY CANAL HYD. REST. - PTE-26B
TERREBONNE PARISH, LOUISIANA

U.S. DEPARTMENT OF AGRICULTURE - NATURAL RESOURCES CONSERVATION SERVICE

REVISIONS

DATE	APPR.	TITLE

CAD FILE NO.
SITE-6-BATTER
DRAWING NO.
LA-231
SHEET NO 07 OF 23

STATE OF LOUISIANA
EDWARD J. GREMILLION III
REGISTERED
PROFESSIONAL ENGINEER
IN
CIVIL ENGINEERING

\\drawils_231\site_6_batter.dgn Feb 14 1999 10:04:41

SEE SHEET 20 & 21 FOR WARNING SIGN DETAILS

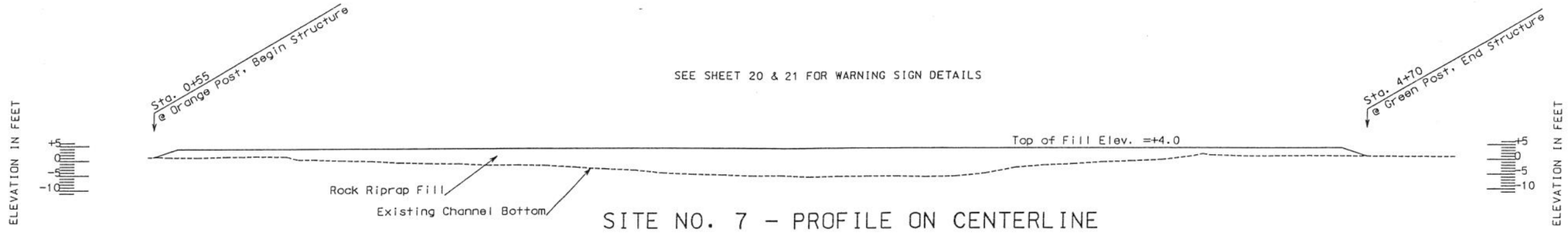

SITE NO. 7 - PROFILE ON CENTERLINE

CONSTRUCTION LIMITS	
Construction Width	Construction Length
500 ft	500 ft
ESTIMATED QUANTITIES	
Rock Riprap	6000 Tons
Geotextile	2660 SY

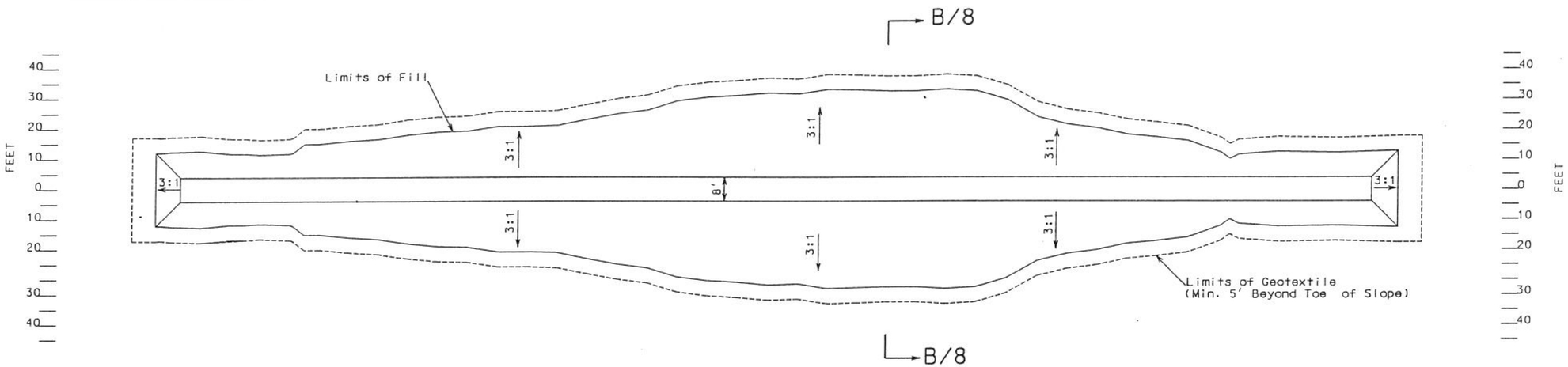

SITE NO. 7 - PLAN VIEW

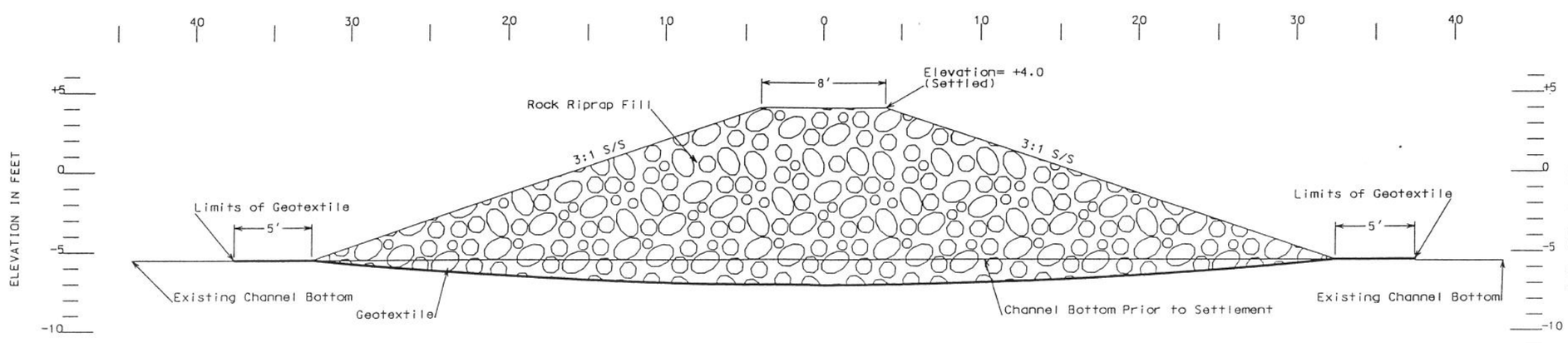

SECTION "B-B/8"

(NOT TO SCALE)

Approved by _____ Date 3/5

Title _____

Title _____

Designed C.E.LaFleur 2/98

Drawn A. J. Gremillion 2/98

Traced _____

Checked James N. Moore 2/99

PLAN AND PROFILE - SITE NO. 7
CONSTRUCTION UNIT NO. 2
BRADY CANAL HYD. REST. - PTE-26B
TERREBONNE PARISH, LOUISIANA

U.S. DEPARTMENT OF AGRICULTURE - NATURAL RESOURCES CONSERVATION SERVICE

REVISIONS

DATE	APPR.	TITLE

STATE OF LOUISIANA
E. J. GUERIN, III
NEW NO. 24033
REGISTERED
PROFESSIONAL ENGINEER
IN
CIVIL ENGINEERING

CAD FILE NO.
SITE#7

DRAWING NO.
LA-231

SHEET NO 8 OF 23

c:\1drawlla-231\site7.dgn Feb 14 1999 10:15:58

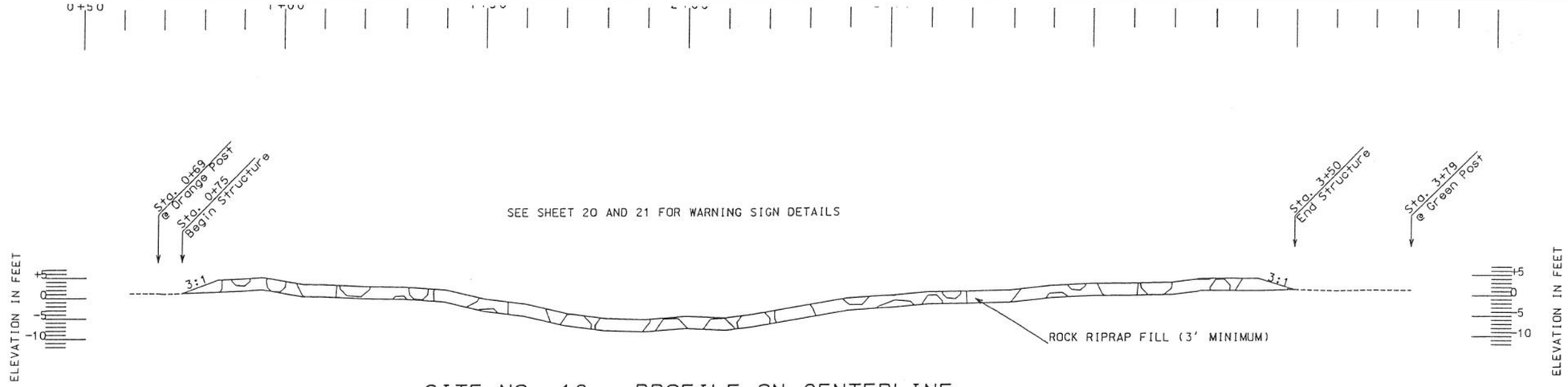

SITE NO. 10 - PROFILE ON CENTERLINE

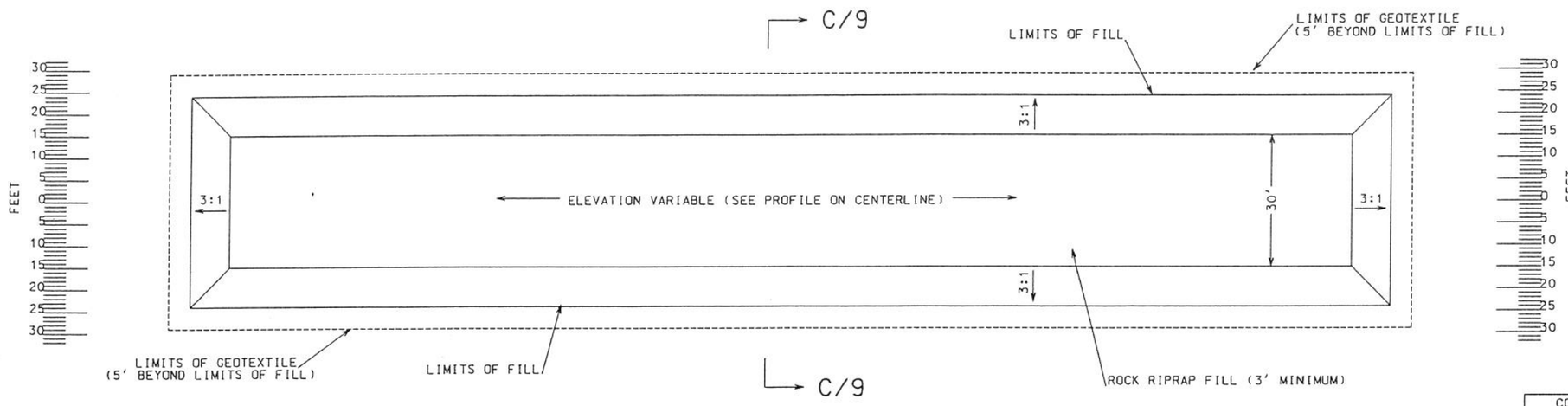

SITE NO. 10 - PLAN VIEW

CONSTRUCTION LIMITS	
Construction Width	Construction Length
500 ft	500 ft
ESTIMATED QUANTITIES	
Rock Riprap	1800 Tons
Geotextile	1840 SY

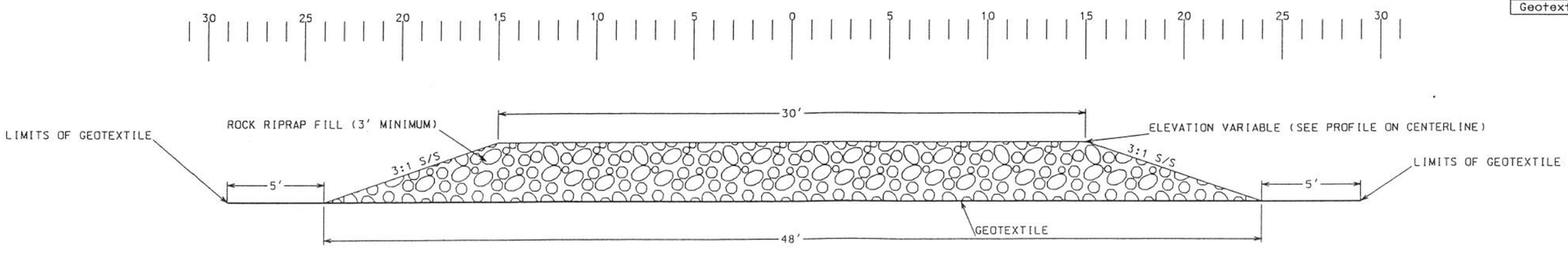

SECTION "C-C/9"

(NOT TO SCALE)

STATE OF LOUISIANA
C. E. GERING, III
REG. NO. 4033
REGISTERED PROFESSIONAL ENGINEER IN CIVIL ENGINEERING

Date	Approved by
3/4	
	Title
	Title

Date		
2/98	Designed	C.E. LaFleur
2/98	Drawn	A. J. Gremillion
	Traced	
2/99	Checked	James N. Moore

PLAN AND PROFILE - SITE NO. 10
CONSTRUCTION UNIT NO. 2
BRADY CANAL HYD. REST. - PTE-26B
TERREBONNE PARISH, LOUISIANA

U.S. DEPARTMENT OF AGRICULTURE - NATURAL RESOURCES CONSERVATION SERVICE

REVISIONS

DATE	APPR.	TITLE

CAD FILE NO. SITE#10

DRAWING NO. LA-231

SHEET NO 9 OF 23

c:\drawlla_231\site#10.dgn Feb 14, 1999 19:33:10

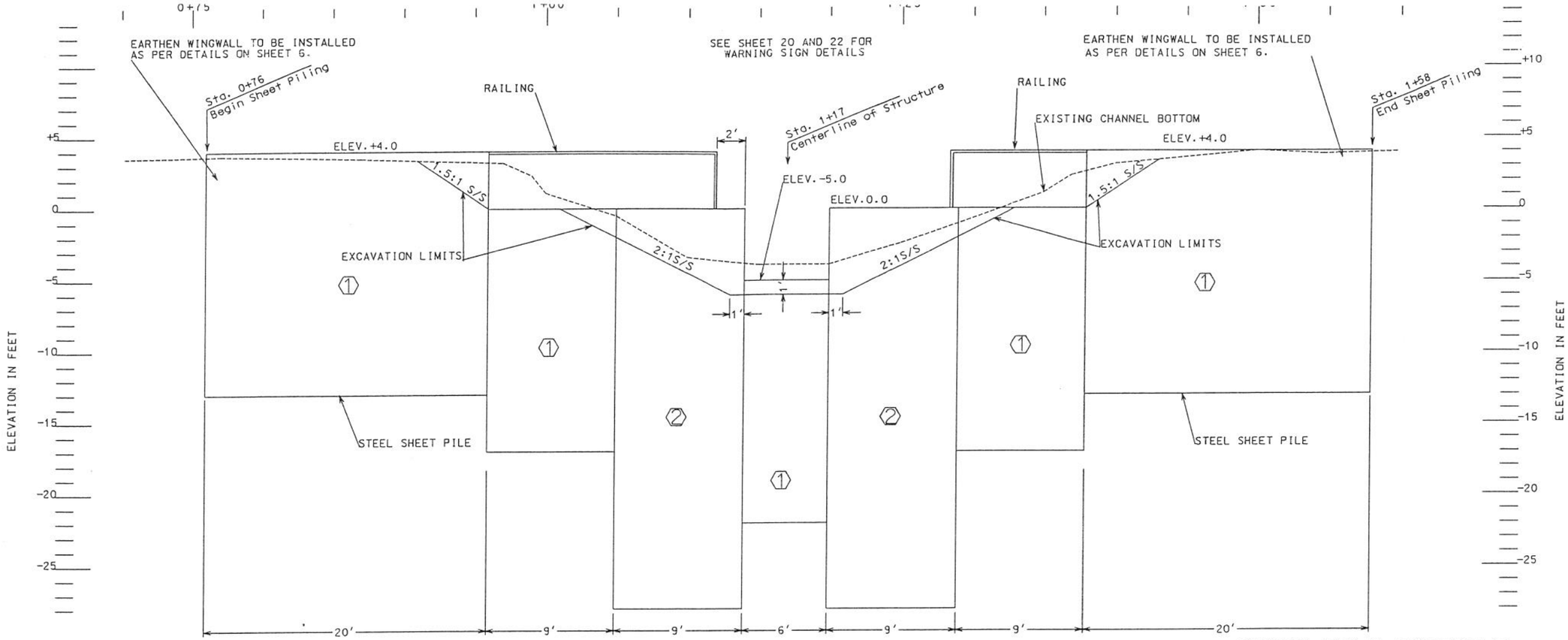

SITE NO. 14 - PROFILE ON CENTERLINE

CONSTRUCTION LIMITS	
Construction Width	Construction Length
305 ft	305 ft

SHEET PILE SCHEDULE

SHEET PILING NO.	IN-PLACE LENGTH	LINEAR FEET	MINIMUM IN^3/FT	SUBTOTALS (FT. SQ)
①	18'	64'	17	1152
②	28'	18'	17	504

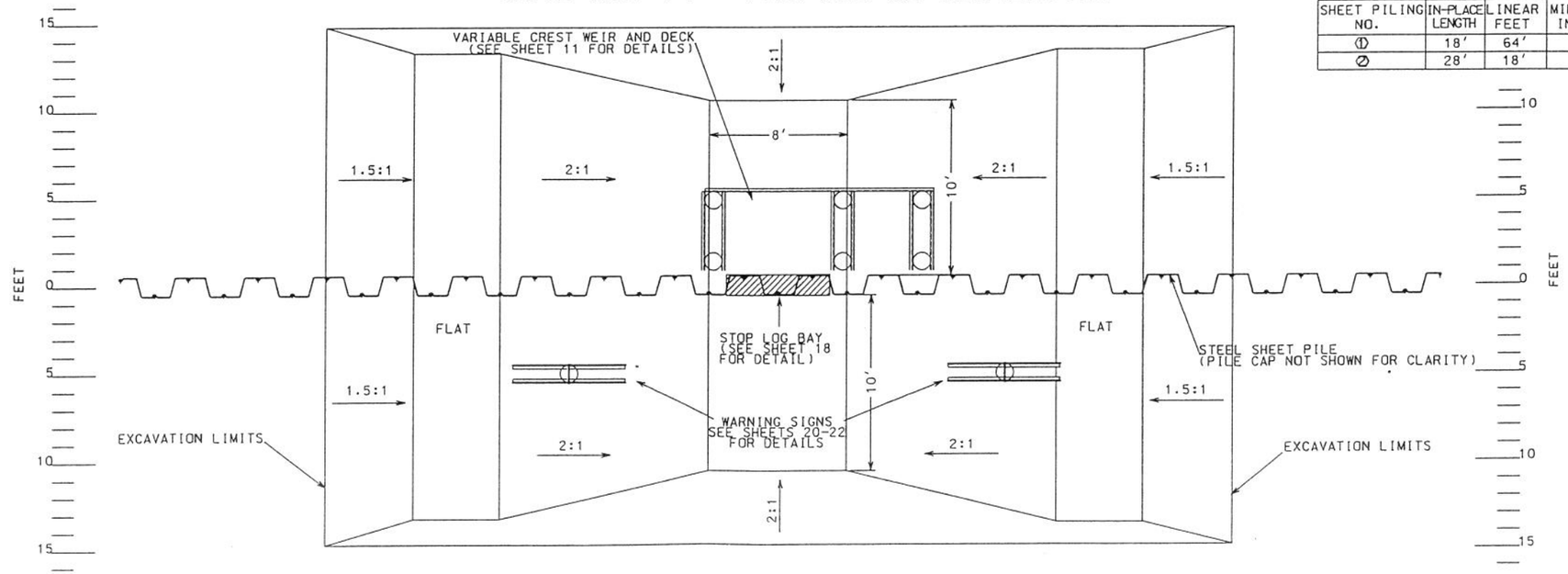

SITE NO. 14 - PLAN VIEW

(NOT TO SCALE)

Date 3/99 Approved by
Date 2/98 Designed C.E. LaFleur
2/98 Drawn A. J. Gremillion
Traced
2/99 Checked James N. Moore
Title
Title

PLAN AND PROFILE - SITE NO. 14
CONSTRUCTION UNIT NO. 2
BRADY CANAL HYD. REST. - PTE-26B
TERREBONNE PARISH, LOUISIANA

U.S. DEPARTMENT OF AGRICULTURE - NATURAL RESOURCES CONSERVATION SERVICE

REVISIONS
DATE APPR. TITLE

CAD FILE NO. site#14
DRAWING NO. LA-231
SHEET NO 10 OF 23

c:\drawlla.231\site#14.dgn Feb 14, 1999 20:50:32

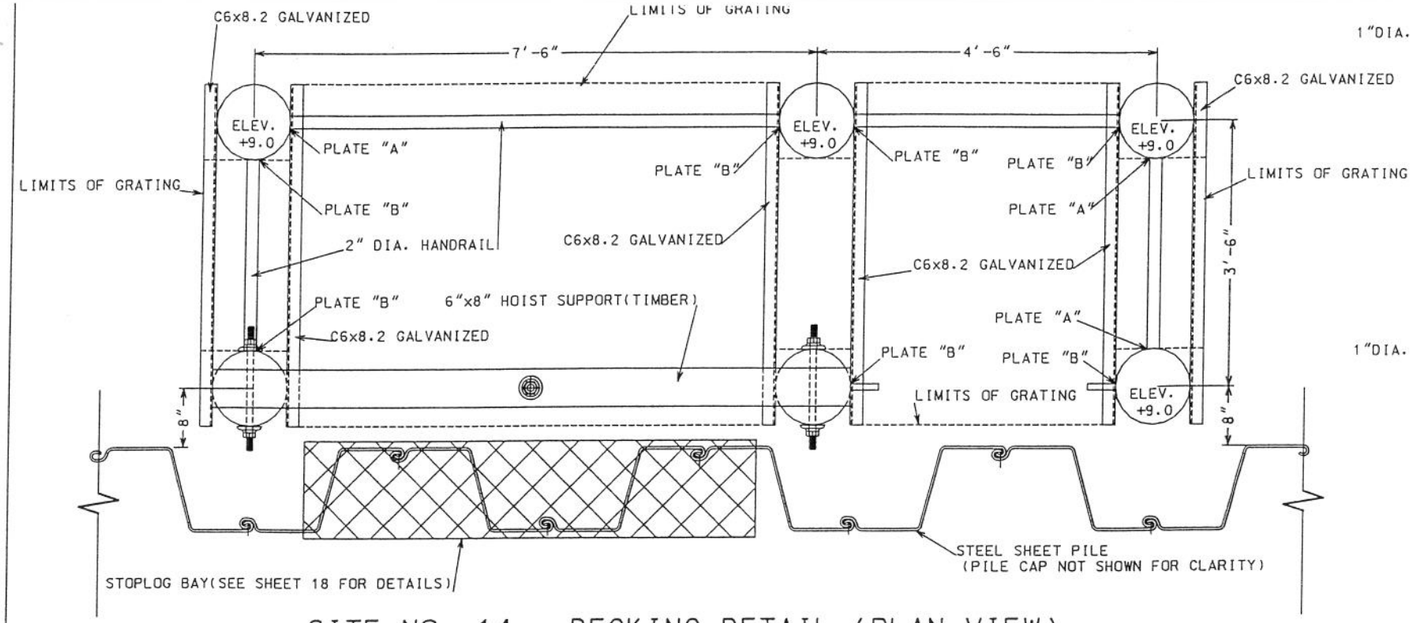

SITE NO. 14 - DECKING DETAIL (PLAN VIEW)

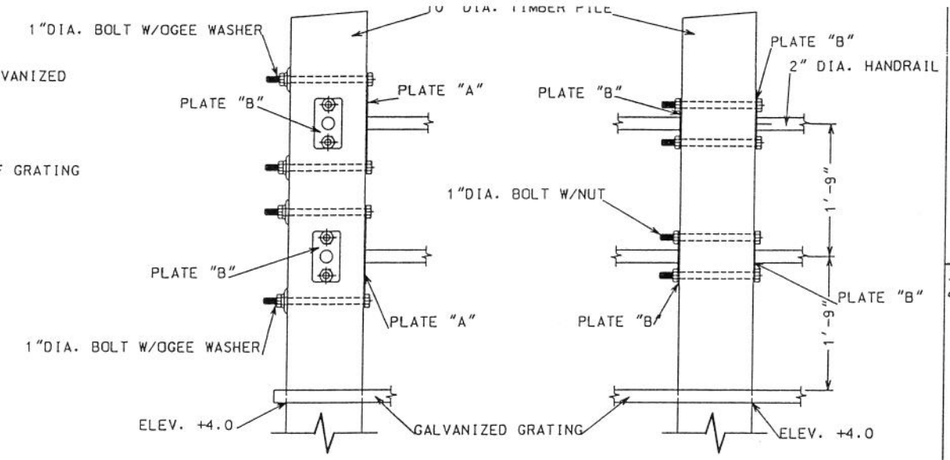

TYPICAL HANDRAIL TO TIMBER PILE CONNECTIONS
(SITES 14, 21, & 23)

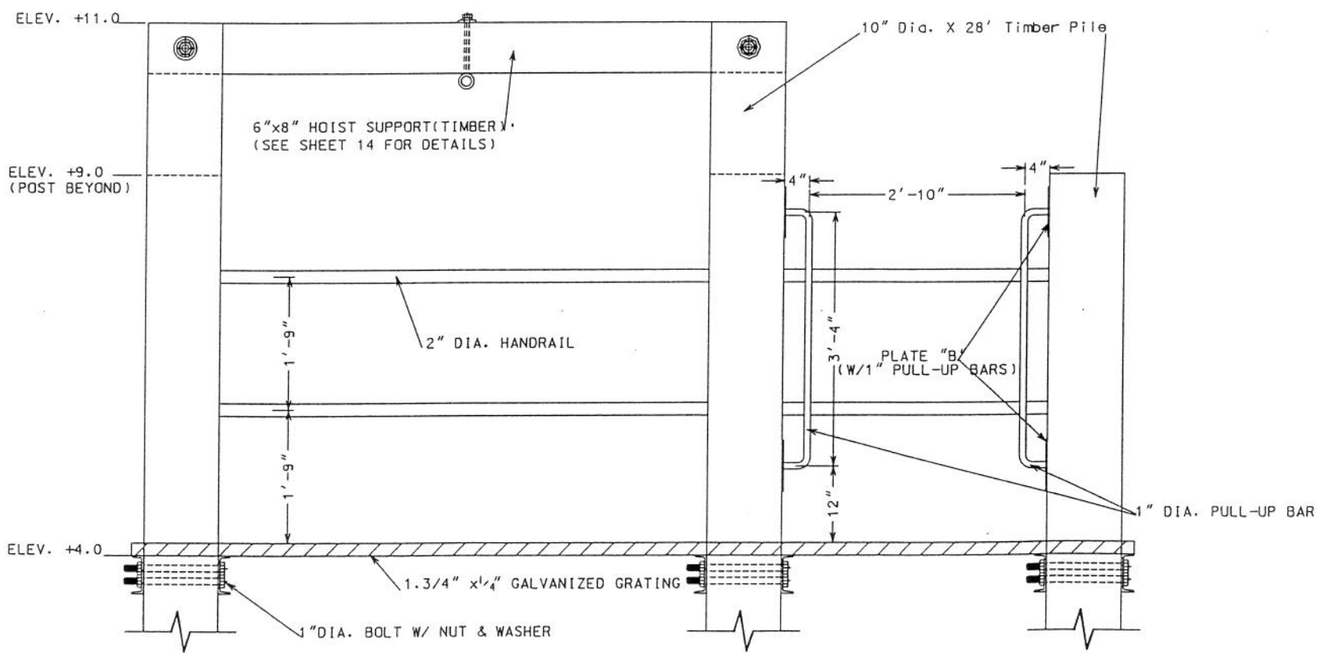

SITE NO. 14 - DECKING DETAIL (ELEVATION VIEW)

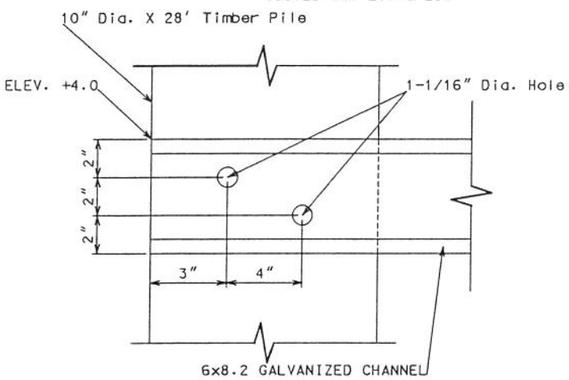

CHANNEL TO TIMBER PILE CONNECTION-TYPICAL
(SITES 14, 21, & 23)

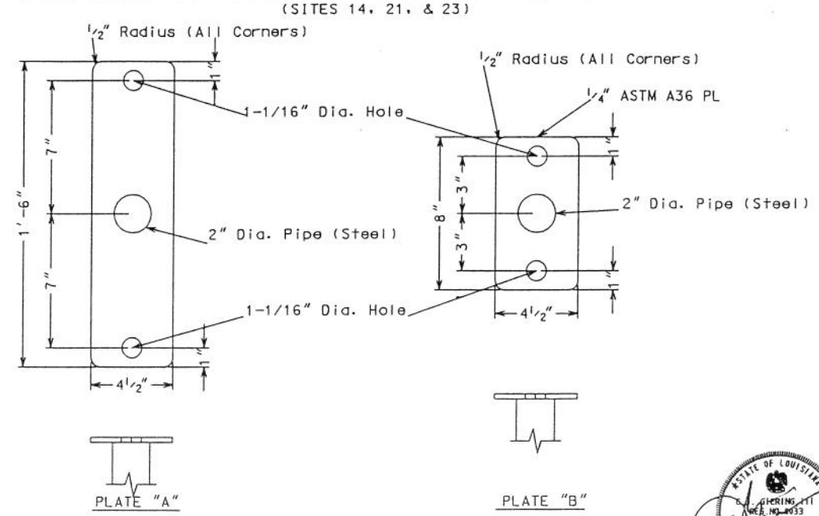

HANDRAIL CONNECTION PLATES-TYPICAL
(SITES 14, 21, & 23)

NOTES:
1. ALL TIMBER PILES FOR SITE 14 SHALL BE ASTM D25 10" DIA. x 28'
2. ALL PILES FOR SITE 14 SHALL BE CAPPED AS SHOWN IN THE DETAIL ON SHEET 16.
3. GALVANIZED GRATING SHALL BE ATTACHED PER MANUFACTURER'S RECOMMENDATIONS.
4. SEE SPECIFICATION 82, METAL FABRICATION AND INSTALLATION FOR ADDITIONAL REQUIREMENTS.

(NOT TO SCALE)

Designed	C.E.LaFleur	Date 2/98	Approved by
Drawn	A. J. Gremillion	2/98	Title
Traced			Title
Checked	James N. Moore	2/99	

DECKING DETAILS - SITE NO. 14
CONSTRUCTION UNIT NO. 2
BRADY CANAL HYD. REST. - PTE-26B
TERREBONNE PARISH, LOUISIANA

U.S. DEPARTMENT OF AGRICULTURE - NATURAL RESOURCES CONSERVATION SERVICE

REVISIONS | DATE | APPR. | TITLE

CAD FILE NO. DECK-14
DRAWING NO. LA-231
SHEET NO 11 OF 23

SITE NO. 20 - PROFILE ON CENTERLINE

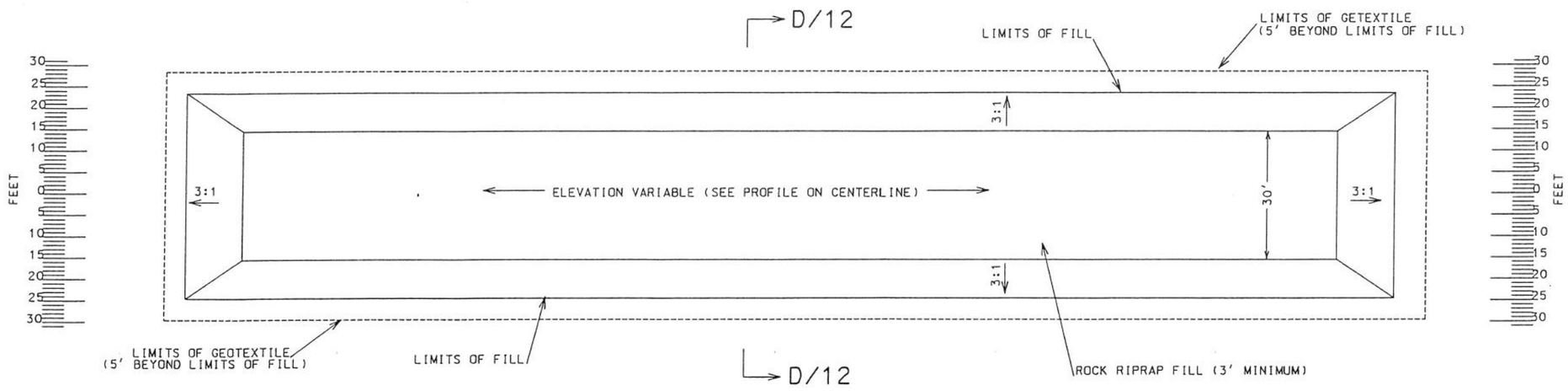

SITE NO. 20 - PLAN VIEW

CONSTRUCTION LIMITS	
Construction Width	Construction Length
450 ft	300 ft
ESTIMATED QUANTITIES	
Rock Riprap	1300 Tons
Geotextile	1290 SY

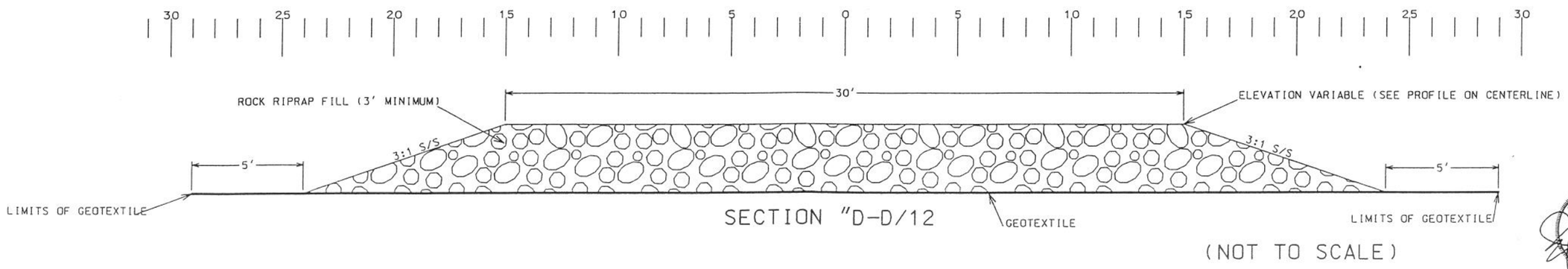

SECTION "D-D/12

(NOT TO SCALE)

Designed C.E. LaFleur Date 2/98
Drawn A. J. Gremillion 2/98
Traced
Checked James N. Moore 2/99
Approved by
Title
Title

PLAN AND PROFILE - SITE NO. 20
CONSTRUCTION UNIT NO. 2
BRADY CANAL HYD. REST. - PTE-26B
TERREBONNE PARISH, LOUISIANA

U.S. DEPARTMENT OF AGRICULTURE - NATURAL RESOURCES CONSERVATION SERVICE

REVISIONS
DATE APPR. TITLE

CAD FILE NO.
SITE#20-2
DRAWING NO.
LA-231
SHEET NO 12 OF 23

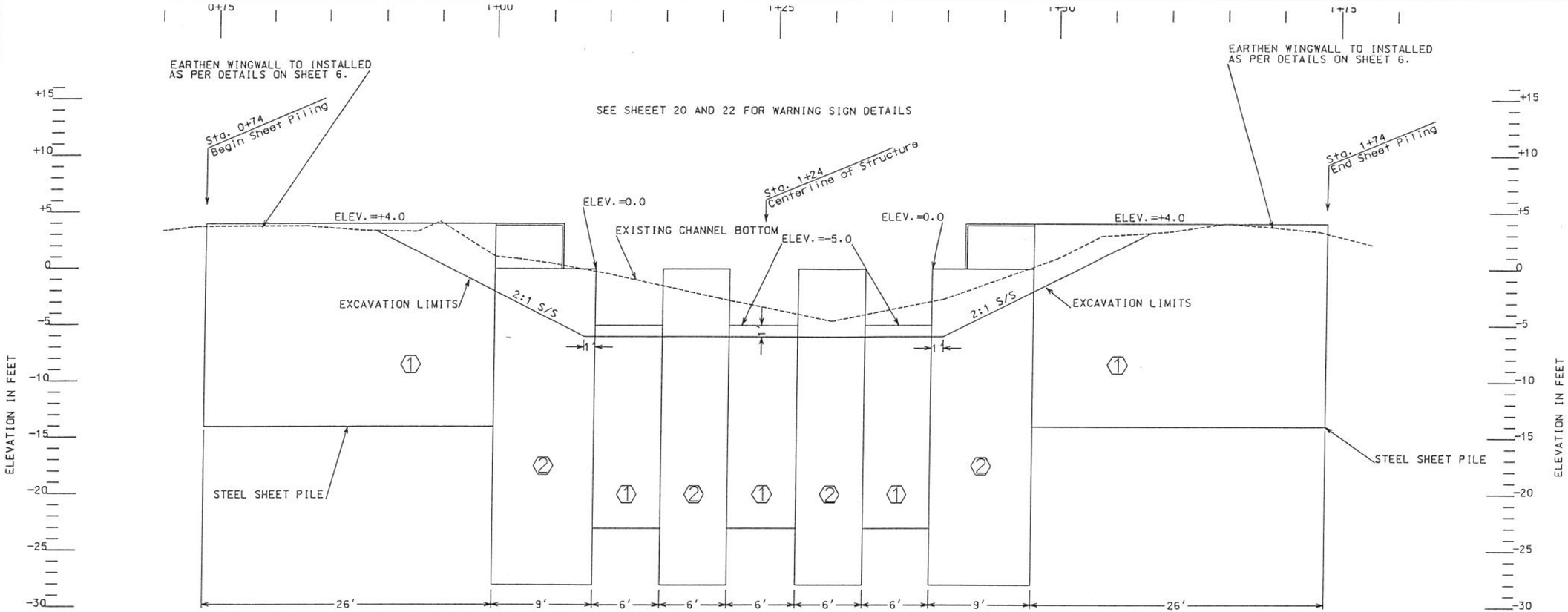

SITE NO. 21 - PROFILE ON CENTERLINE

SHEET PILE SCHEDULE

SHEET PILING NO.	IN-PLACE LENGTH	LINEAR FEET	MINIMUM IN^3/FT	SUBTOTALS (FT. SQ)
①	18'	70'	17	1260
②	28'	30'	17	840

CONSTRUCTION LIMITS	
Construction Width	Construction Length
250 ft	200 ft

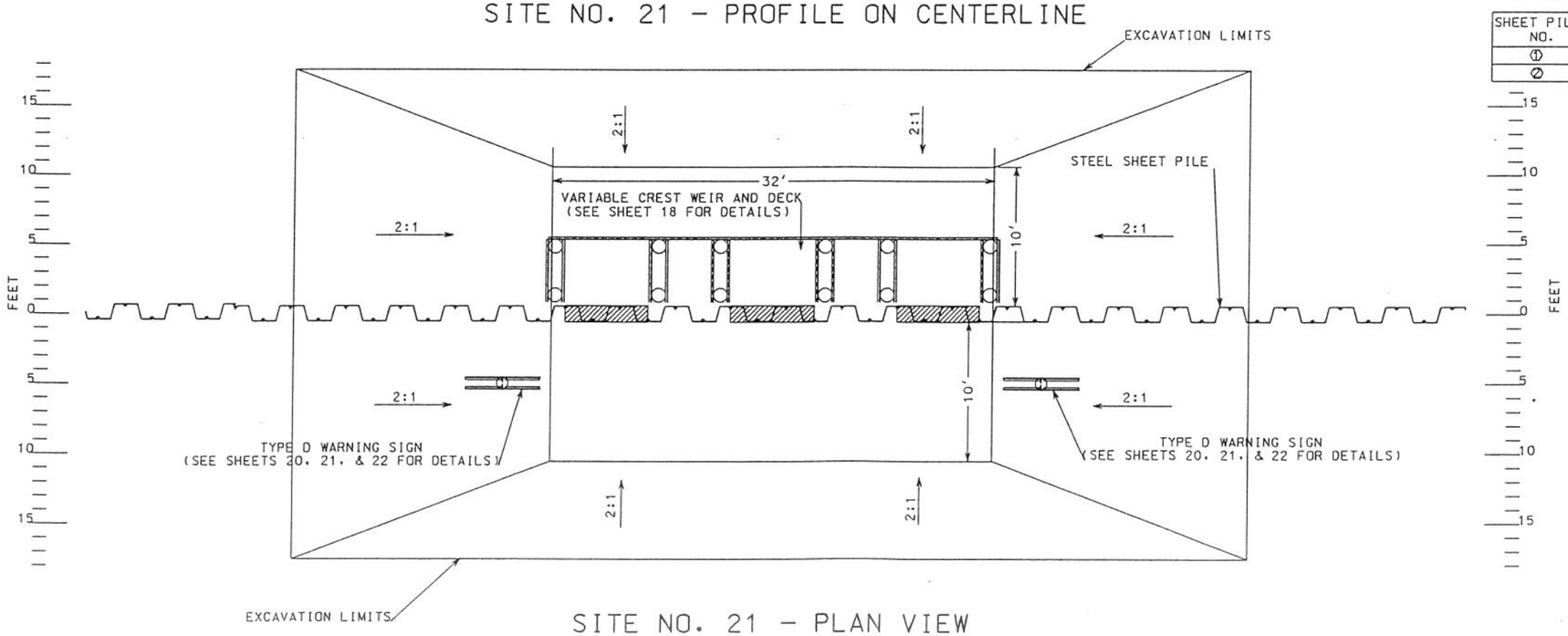

SITE NO. 21 - PLAN VIEW

(NOT TO SCALE)

STATE OF LOUISIANA
E. L. GLERING, II
REGISTERED
PROFESSIONAL ENGINEER
IN
CIVIL ENGINEERING

Date 3/99
Approved by
Title
Date 2/98
Designed C.E. LaFleur
Drawn A. J. Gremillion
Traced
Checked James N. Moore
Title

PLAN AND PROFILE - SITE NO. 21
CONSTRUCTION UNIT NO. 2
BRADY CANAL HYD. REST. - PTE-26B
TERREBONNE PARISH, LOUISIANA

U.S. DEPARTMENT OF AGRICULTURE - NATURAL RESOURCES CONSERVATION SERVICE

REVISIONS
DATE | APPR. | TITLE

CAD FILE NO.
SITE#21-1

DRAWING NO.
LA-231

SHEET NO 13 OF 23

c:\drawls.231\site#21.1.dgn Feb 14 1999 21:27:39

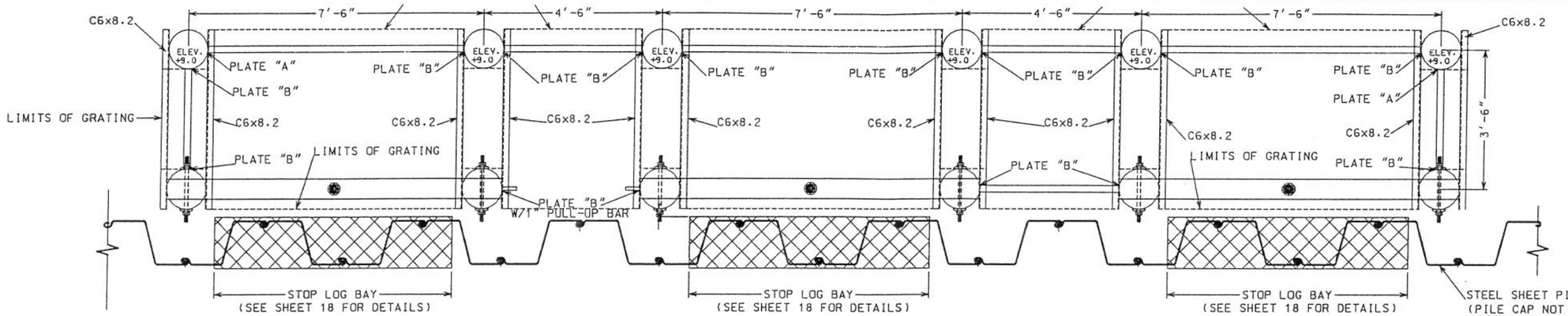

SITE NO. 21 - DECKING DETAIL (PLAN VIEW)

NOTES:

1. ALL TIMBER PILES FOR SITE 21 SHALL BE 10" DIA. x 28'.
2. ALL PILES FOR SITE 21 SHALL BE CAPPED AS SHOWN IN THE DETAIL ON SHEET 16.
3. GALVANIZED GRATING SHALL BE ATTACHED PER MANUFACTURER'S RECOMMENDATIONS.
4. SEE SHEET 11 FOR HANDRAIL DETAILS.

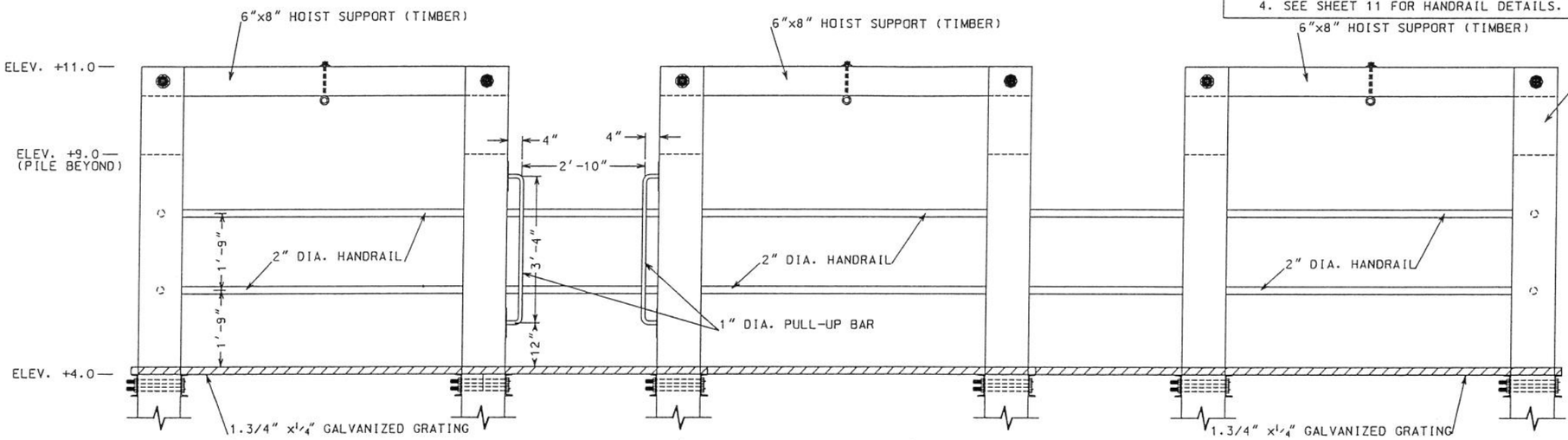

SITE NO. 21 - DECKING DETAIL (ELEVATION VIEW)

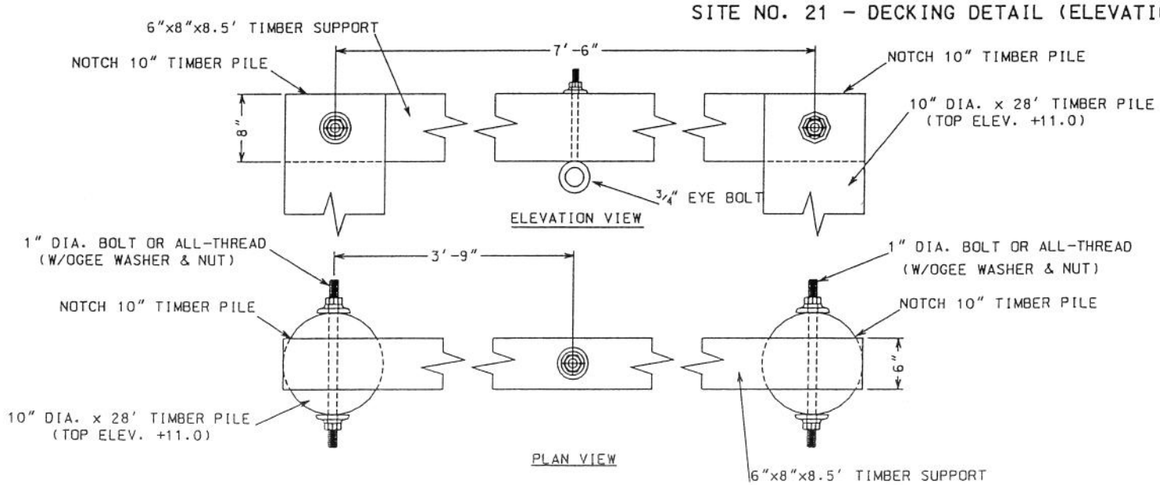

HOIST SUPPORT DETAILS
(SITES 14, 21, & 23)

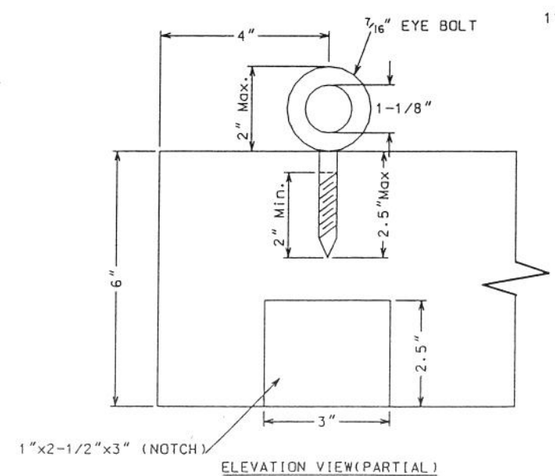

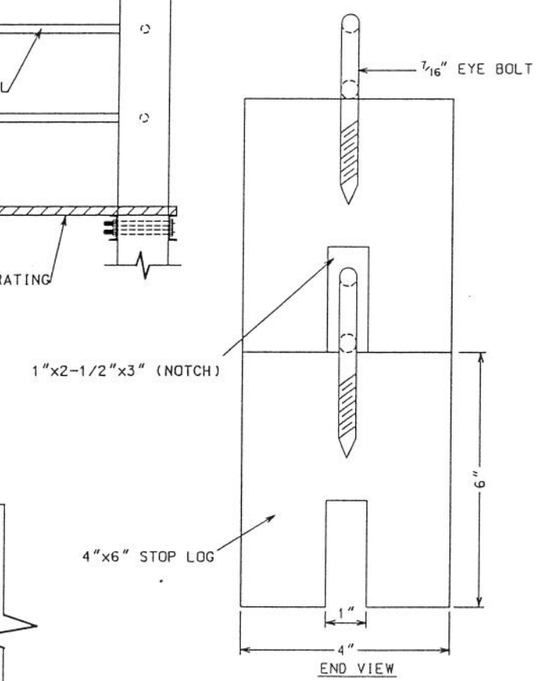

STOP LOG DETAILS

(SITES 14, 21, & 23)

		Date
Designed	C.E.LaFleur	2/98
Drawn	A. J. Gremillion	2/98
Traced		
Checked	James N. Moore	2/99

Approved by _____ Date 3/4/99
Title _____
Title _____

DECKING DETAILS - SITE NO. 21
CONSTRUCTION UNIT NO. 2
BRADY CANAL HYD. REST. - PTE-26B
TERREBONNE PARISH, LOUISIANA

U.S. DEPARTMENT OF AGRICULTURE - NATURAL RESOURCES CONSERVATION SERVICE

DATE	APPR.	REVISIONS TITLE

CAD FILE NO. DECK-21
DRAWING NO. LA-231
SHEET NO 14 OF 23

c:\ldrawla231\deck21.dgn Feb 14 1999 21:48:02

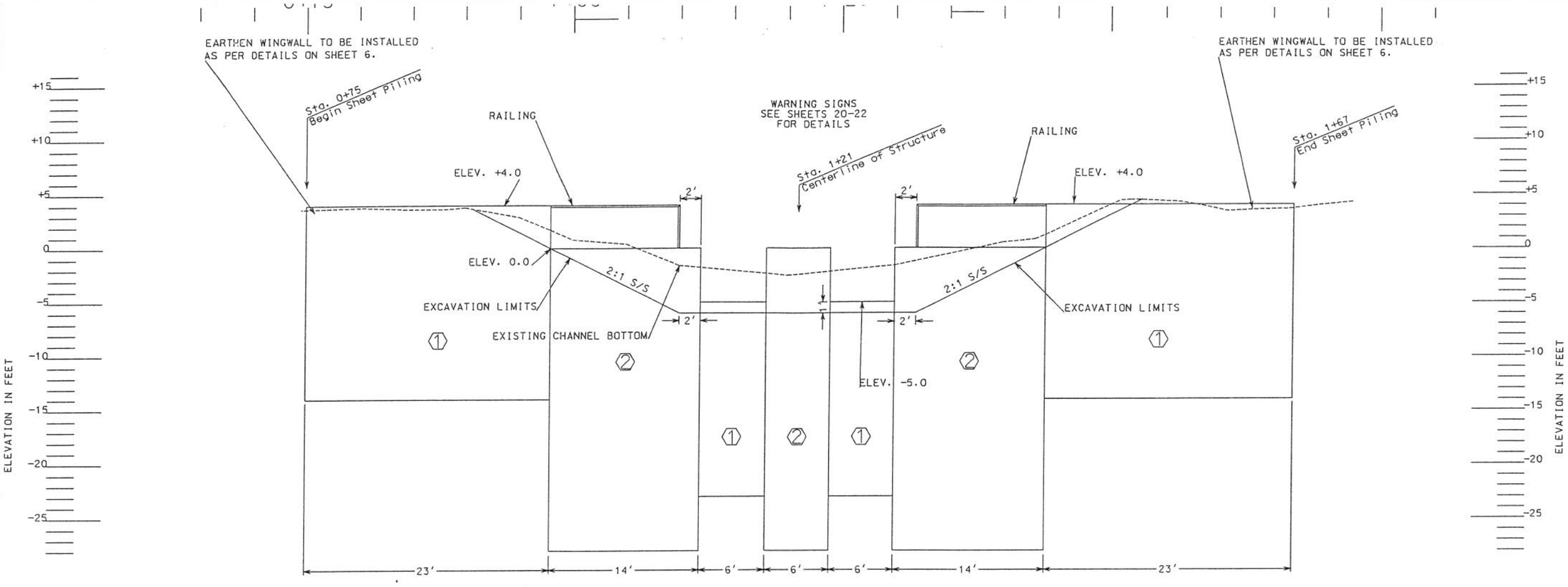

SITE NO. 23 - PROFILE ON CENTERLINE

SHEET PILE SCHEDULE

SHEET PILING NO.	IN-PLACE LENGTH	LINEAR FEET	MINIMUM IN^3/FT	SUBTOTALS (FT. SQ)
①	18'	58'	17	1044
②	28'	34'	17	952

CONSTRUCTION LIMITS	
Construction Width	Construction Length
250 ft	300 ft

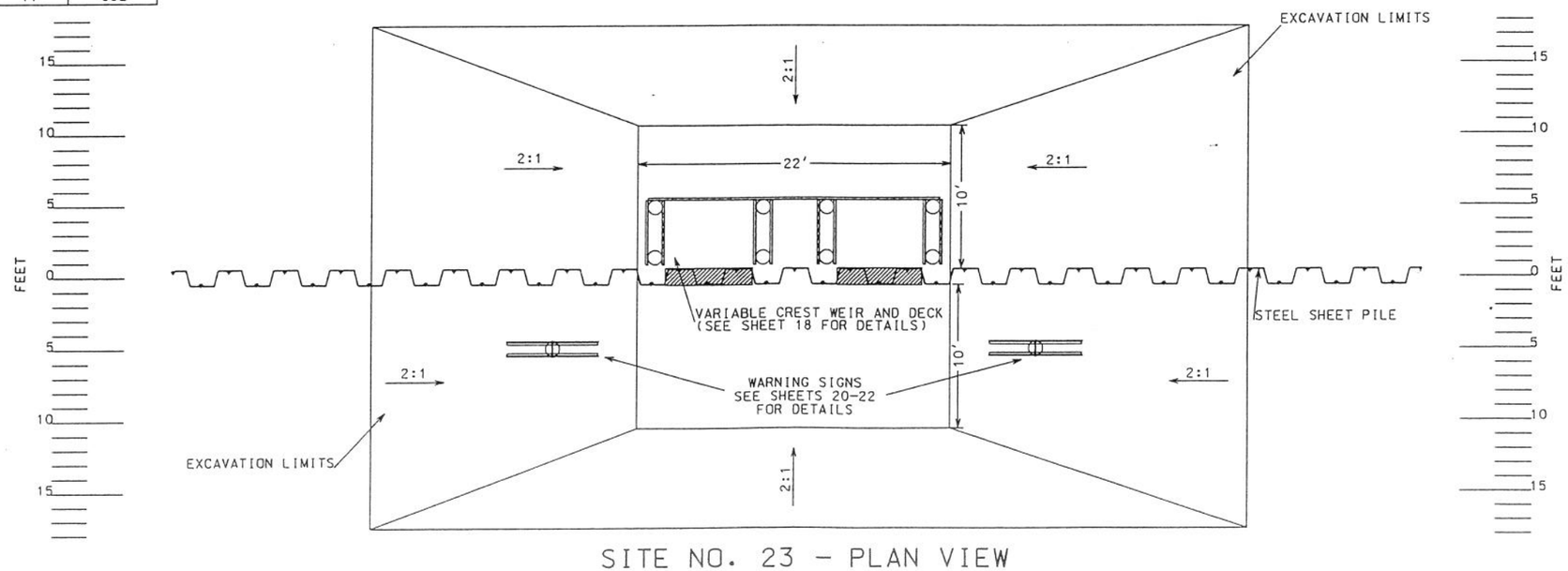

(NOT TO SCALE)

SITE NO. 23 - PLAN VIEW

STATE OF LOUISIANA E. J. GIEBING, III REG. NO. 18232 CIVIL STATE OF PROFESSIONAL ENGINEER IN ENGINEERING

PLAN AND PROFILE - SITE NO. 23
CONSTRUCTION UNIT NO. 2
BRADY CANAL HYD. REST. - PTE-26B
TERREBONNE PARISH, LOUISIANA

U.S. DEPARTMENT OF AGRICULTURE - NATURAL RESOURCES CONSERVATION SERVICE

Designed C.E. LaFleur 2/98
Drawn A. J. Gremillion 2/98
Traced
Checked James N. Moore 2/99

Approved by
Title
Title

REVISIONS
DATE | APPR. | TITLE

CAD FILE NO. 23-DESIGN
DRAWING NO. LA-231
SHEET NO 15 OF 23

c:\ldraw\la-231\23-design.dgn Feb 14, 1999 22:34:27

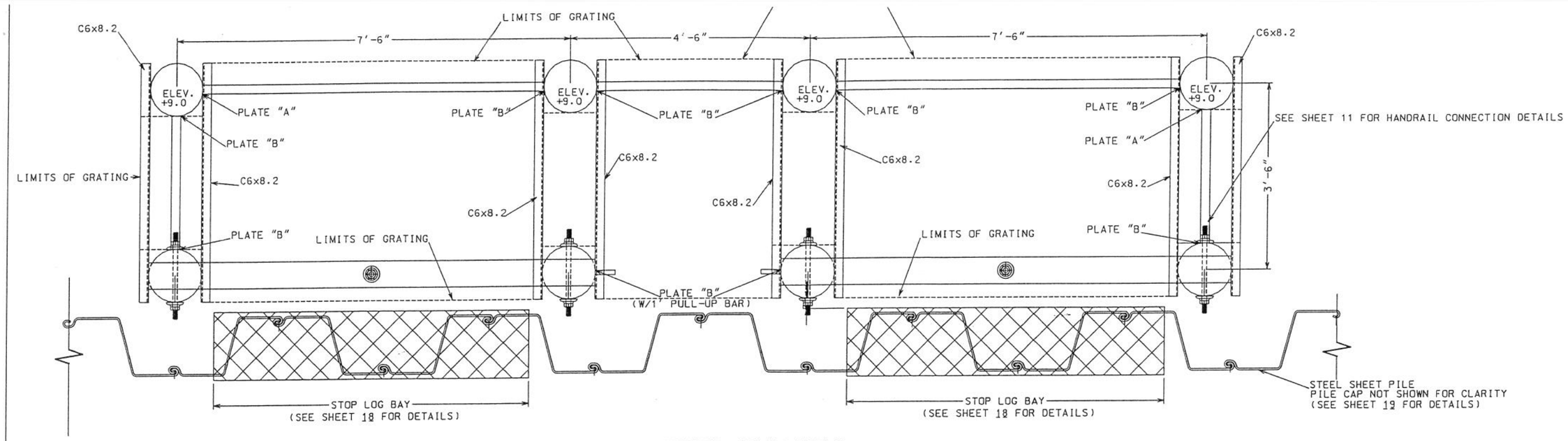

SITE NO. 23 – DECKING DETAIL (PLAN VIEW)

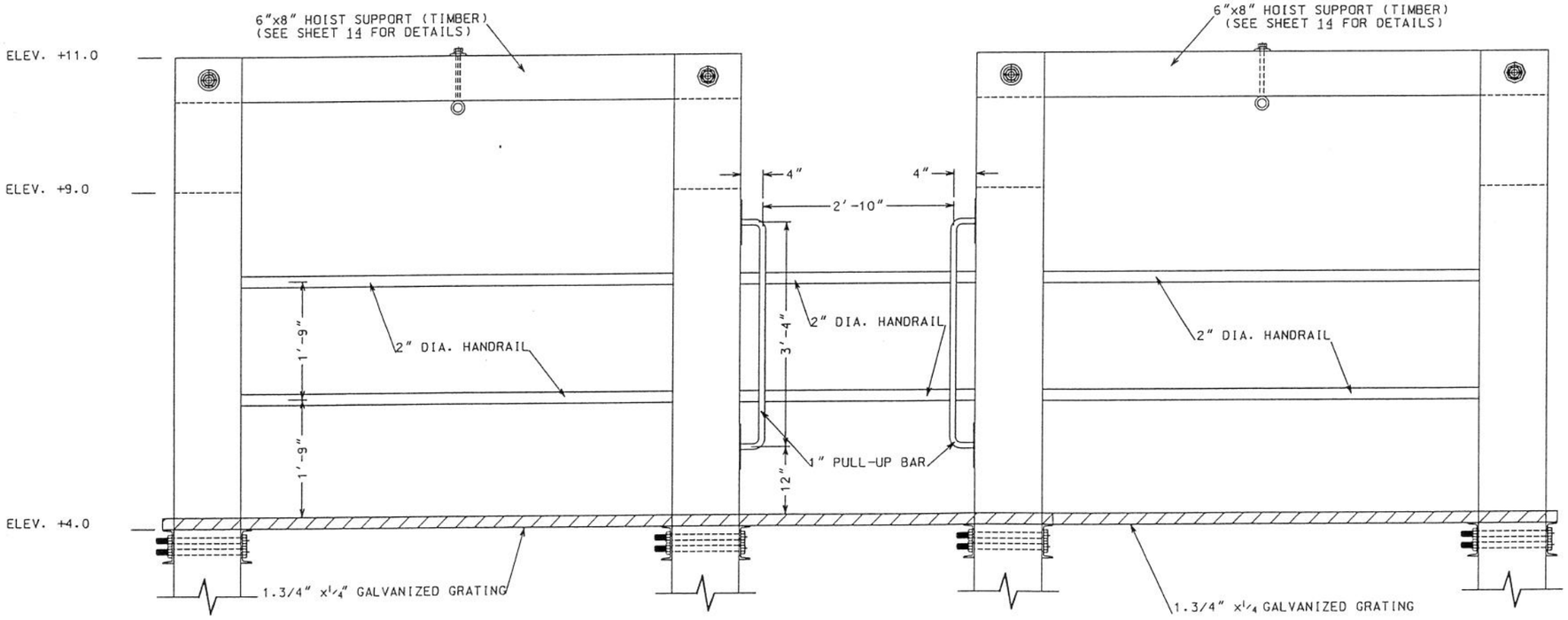

SITE NO. 23 – DECKING DETAIL (ELEVATION VIEW)

COAT TOP OF PILE WITH COAL TAR EPOXY PAINT PRIOR TO PLACING CAP
24"x24"x26 GA. ALUMINUM FLASHING
(ATTACH USING ALUMINUM OR STAINLESS NAILS)

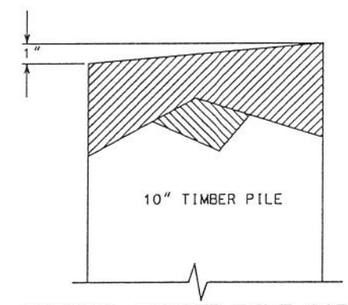

TYPICAL TIMBER PILE CAP
(NOT TO SCALE)

NOTES:
1. ALL TIMBER PILES FOR SITE 23 SHALL BE 10" DIA. x 28'.
2. ALL PILES FOR SITE 23 SHALL BE CAPPED AS SHOWN IN THE DETAIL ON SHEET 16.
3. GALVANIZED GRATING SHALL BE ATTACHED PER MANUFACTURER'S RECOMMENDATIONS.

(NOT TO SCALE)

		Date
Designed	C.E.LaFleur	2/98
Drawn	A. J. Gremillion	2/98
Traced		
Checked	James N. Moore	2/98

Approved by _____ Date 3/
Title _____
Title _____

DECKING DETAILS – SITE NO. 23
CONSTRUCTION UNIT NO. 2
BRADY CANAL HYD. REST. – PTE-26B
TERREBONNE PARISH, LOUISIANA

U.S. DEPARTMENT OF AGRICULTURE – NATURAL RESOURCES CONSERVATION SERVICE

REVISIONS
DATE | APPR. | TITLE

CAD FILE NO.
DECK-23

DRAWING NO.
LA-231

SHEET NO 16 OF 23

c:\drawla-231\deck-23.dgn Feb 14, 1999 22:58:43

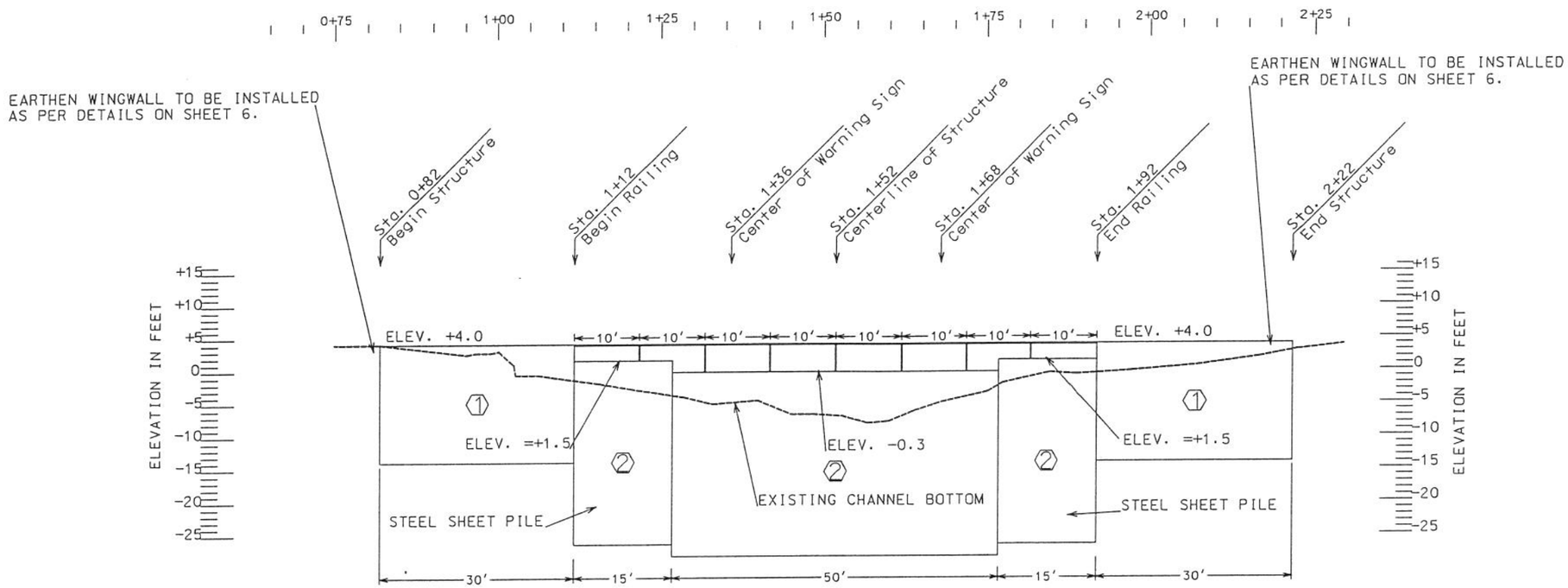

SEE SHEET 20 AND 22 FOR WARNING SIGN DETAILS

SITE NO. 24 - PROFILE ON CENTERLINE

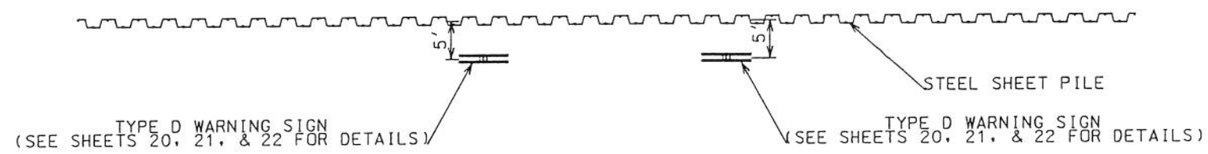

SITE NO. 24 - PLAN VIEW

(PILE CAP NOT SHOWN FOR CLARITY)

SHEET PILE SCHEDULE

SHEET PILING NO.	IN-PLACE LENGTH	LINEAR FEET	MINIMUM IN^3/FT	SUBTOTALS (FT. SQ)
①	18'	60'	17	1080
②	28'	80'	17	2240

CONSTRUCTION LIMITS	
Construction Width	Construction Length
250 ft	250 ft

(NOT TO SCALE)

STATE OF LOUISIANA
S. J. LATERING III
REG. NO. 8033
REGISTERED
PROFESSIONAL ENGINEER
IN
CIVIL ENGINEERING

Approved by _____ Date 3/98
Title _____
Title _____

Designed C.E. LaFleur 2/98
Drawn A. J. Gremillion 2/98
Traced _____
Checked James N. Moore 2/99

PLAN AND PROFILE - SITE NO. 24
CONSTRUCTION UNIT NO. 2
BRADY CANAL HYD. REST. - PTE-26B
TERREBONNE PARISH, LOUISIANA

U.S. DEPARTMENT OF AGRICULTURE - NATURAL RESOURCES CONSERVATION SERVICE

REVISIONS
DATE | APPR. | TITLE

CAD FILE NO.
SITE#24-3

DRAWING NO.
LA-231

SHEET NO 17 OF 23

c:\1drawls-231\site#24-3.dgn Mar 03 1999 11:41:27

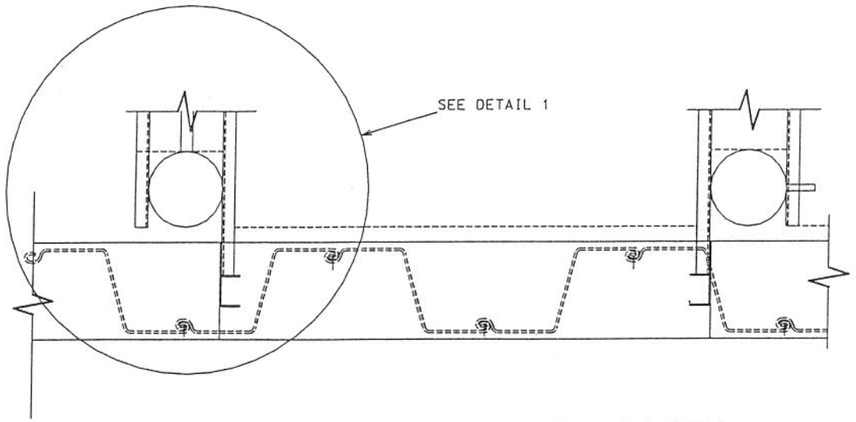

TYPICAL STOP LOG BAY - PLAN VIEW

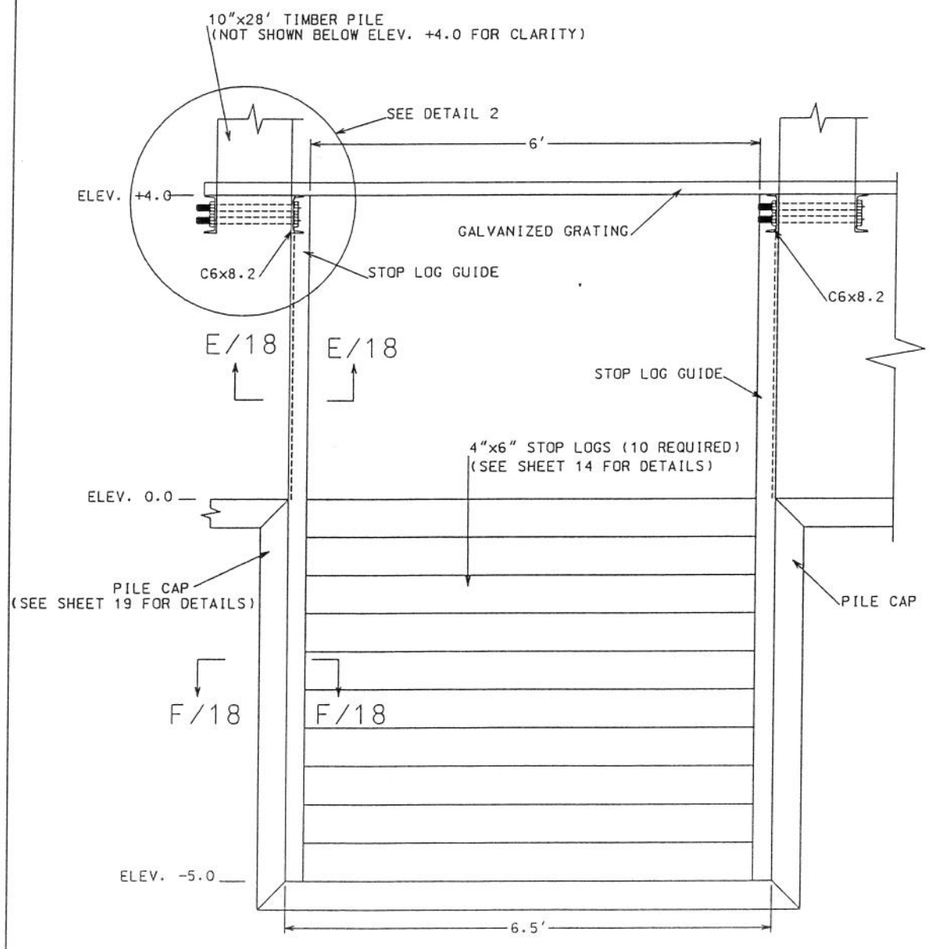

TYPICAL STOP LOG BAY - ELEVATION VIEW

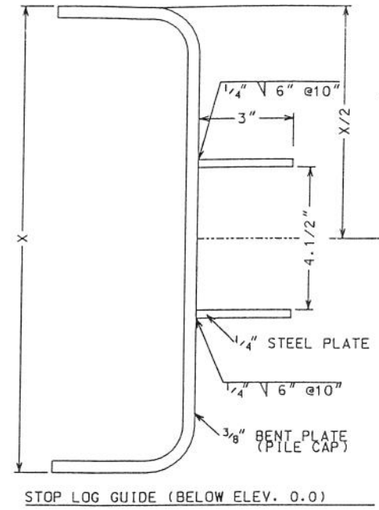

STOP LOG GUIDE (BELOW ELEV. 0.0)

SECTION "F-F/18"

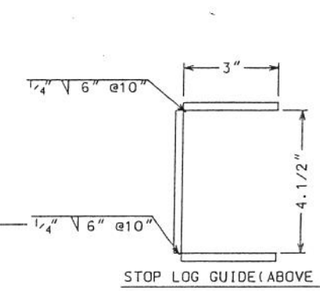

STOP LOG GUIDE(ABOVE ELEV.0.0)

SECTION "E-E/18"

QUANTITY	LENGTH
2	8'6"
2	4'0"

STOP LOG LIFT ROD DETAIL

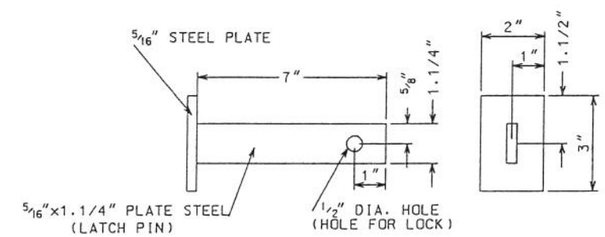

SIDE VIEW END VIEW

LATCH PIN DETAILS

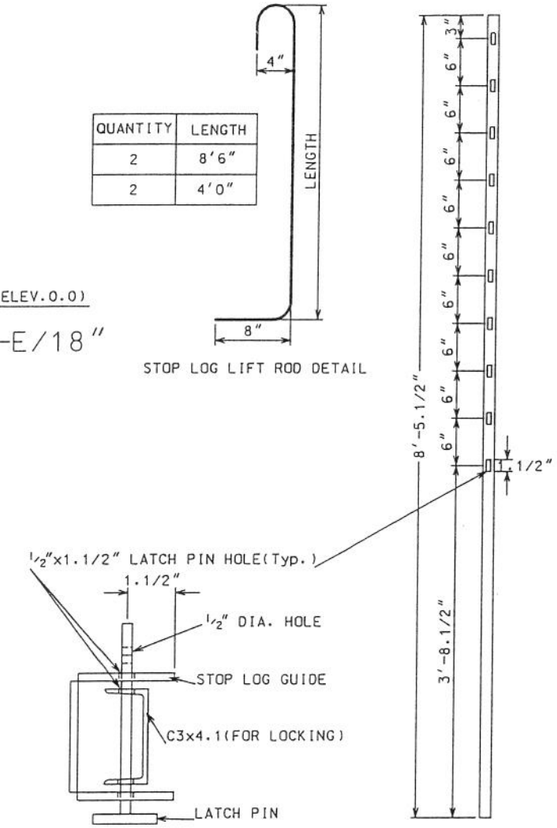

AS ASSEMBLED (PLAN VIEW) C3x4.1(FOR LOCKING)

STOP LOG LOCKING DETAILS

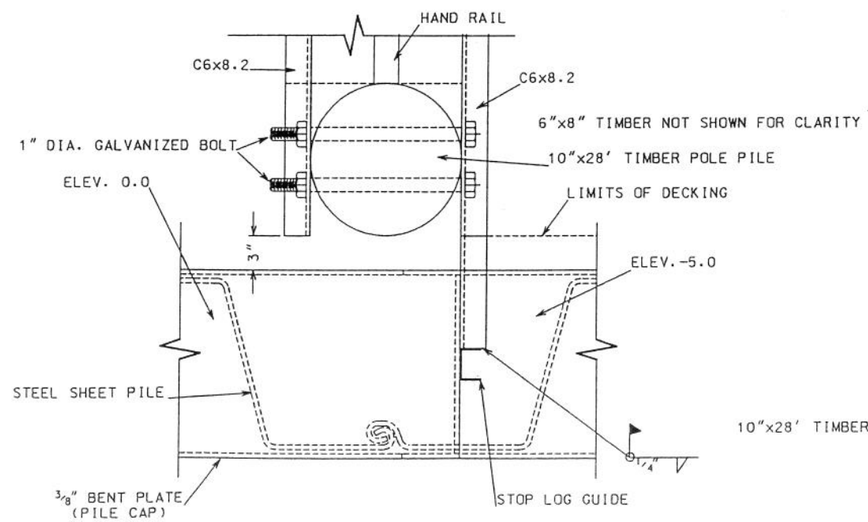

DETAIL 1

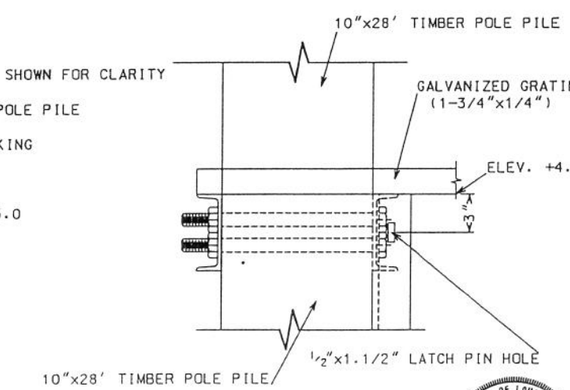

DETAIL 2

(NOT TO SCALE)

STOP LOG BAY DETAILS (TYPICAL)
CONSTRUCTION UNIT NO. 2
BRADY CANAL HYD. REST. - PTE-26B
TERREBONNE PARISH, LOUISIANA

U.S. DEPARTMENT OF AGRICULTURE - NATURAL RESOURCES CONSERVATION SERVICE

		Date
Designed	C.E.LaFleur	2/98
Drawn	A. J. Gremillion	2/98
Traced		
Checked	James N. Moore	2/99

Approved by _____ Date 3/99
Title
Title

REVISIONS: DATE | APPR. | TITLE

CAD FILE NO. STOP-LOG-BAY
DRAWING NO. LA-231
SHEET NO 18 OF 23

STATE OF LOUISIANA
GERING-TT
REGISTERED
PROFESSIONAL ENGINEER
IN
CIVIL ENGINEERING

11drawlla-231stop-log-bay.dgn Feb 15 1999 15:08:12

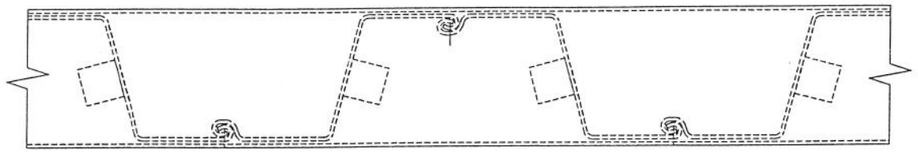

PLAN VIEW
(TYPICAL PILE CAP TO SHEET PILE CONNECTION)

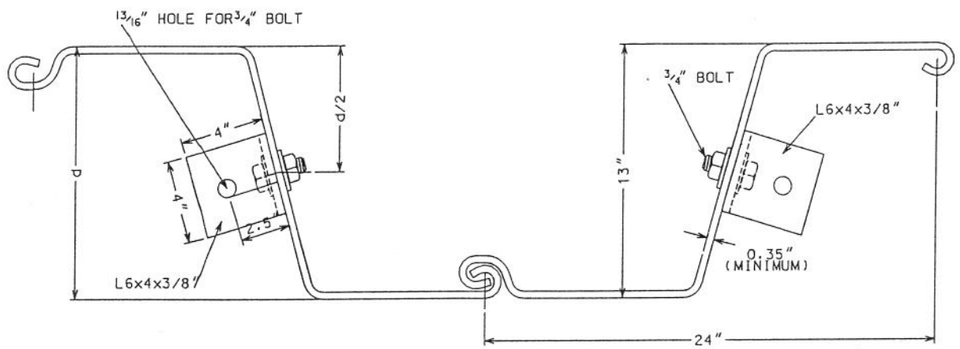

TYPICAL SHEET PILE DETAIL
(NORMAL CONFIGURATION)

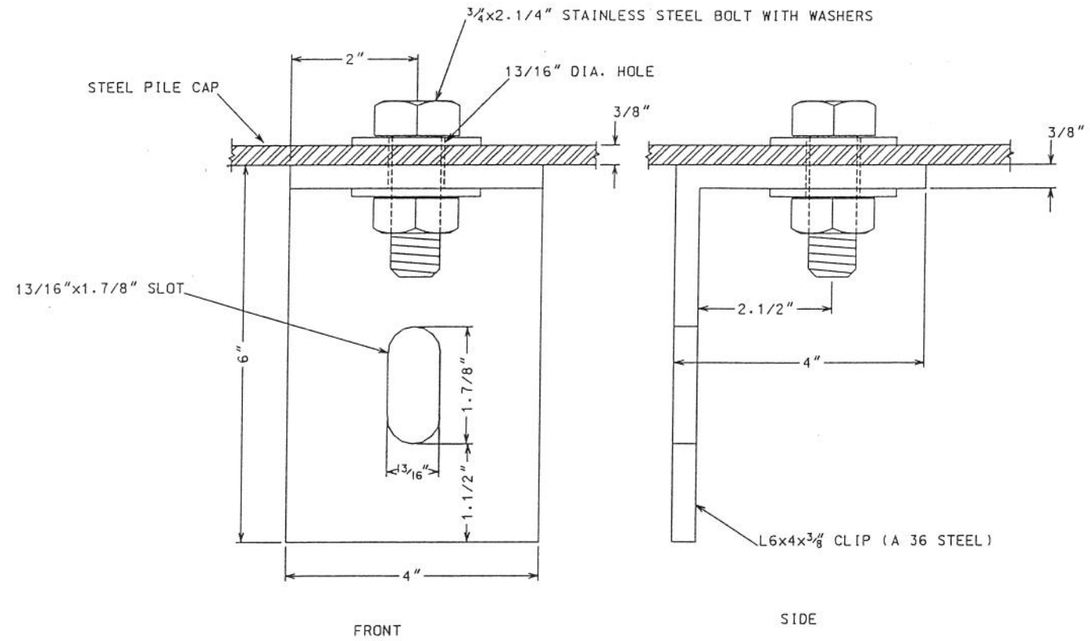

L 6 x 4 x 3/8" (CLIP)

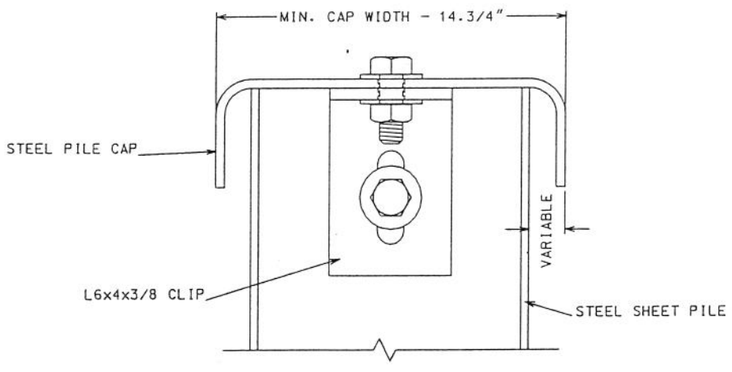

TYPICAL PILE CAP TO SHEET PILE CONNECTION
(SIDE VIEW)

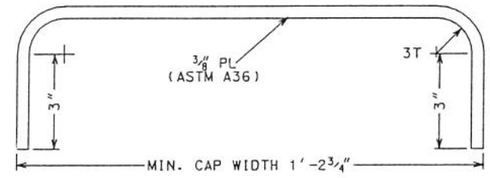

TYPICAL PILE CAP
(NOT TO SCALE)

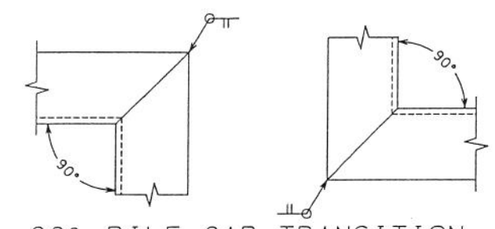

90° PILE CAP TRANSITION
(NOT TO SCALE)

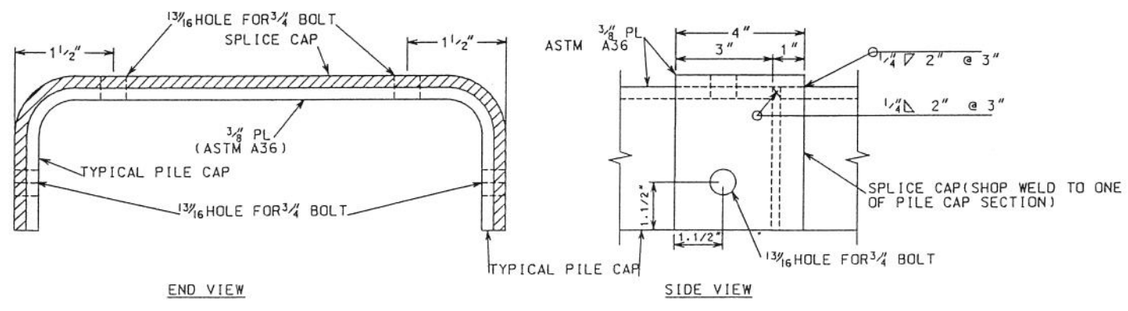

PILE CAP SPLICE DETAILS
(NOT TO SCALE)

NOTES:

1. THE MINIMUM WEB AND FLANGE THICKNESS OF SHEET PILES SHALL BE 0.35".
2. THE CONTRACTOR SHALL SUBMIT A METHOD OF CONNECTING THE PILE CAP TO THE SHEET PILE AND ALL DRAWINGS FOR APPROVAL 14 DAYS PRIOR TO FABRICATION.
3. STEEL SHEET PILE SHALL CONFORM TO ASTM A328 OR ASTM A572, GR. 50. ALL CHANNEL, ANGLES AND PLATES SHALL CONFORM TO ASTM A36. THE SHEET PILE AND PILE CAP SHALL BE COATED WITH COAL TAR EPOXY AS SPECIFIED BY CONST. SPEC. 82.
4. ALL SHEET PILE DIMENSIONS ARE TYPICAL, AND ARE SUBJECT TO CHANGE BASED ON MANUFACTURER/SUPPLIER.
5. SHEET PILE WILL BE DRIVEN IN THE "NORMAL CONFIGURATION" AS SHOWN.
6. THE HOLES IN THE SHEET PILE SHALL BE FIELD DRILLED.
7. THE L 6x4x3/8" CLIPS ARE TO BE PLACED ON THE MIDDLE SECTION OF EACH PILE AS SHOWN IN THE DRAWINGS.
8. PILE CAP SHALL BE PLACED ALONG THE ENTIRE LENGTH OF THE SHEET PILE INCLUDING VERTICAL SECTIONS AND THE BOTTOM OF THE WEIR BAYS.

NOTE: THE CONTRACTOR SHALL BE ALLOWED TO UTILIZE AN APPROPRIATE STANDARD CHANNEL SECTION IN-LIEU OF A FABRICATED PILE CAP. REFER TO CONSTRUCTION SPECIFICATION 81, METAL FABRICATION AND INSTALLATION FOR ADDITIVE REQUIREMENTS

STATE OF LOUISIANA
E. J. GIERING, III
REG. NO. 9033
REGISTERED PROFESSIONAL ENGINEER
IN
CIVIL ENGINEERING

NOT TO SCALE

Designed C.E.LaFleur	Date 2/98	Approved by	Date 3/99
Drawn A. J. Gremillion	2/98	Title	
Traced			
Checked James N. Moore	2/99	Title	

PILE CAP TO SHEET PILE - DETAILS
CONSTRUCTION UNIT NO. 2
BRADY CANAL HYD. REST. - PTE-26B
TERREBONNE PARISH, LOUISIANA

U.S. DEPARTMENT OF AGRICULTURE - NATURAL RESOURCES CONSERVATION SERVICE

REVISIONS

DATE	APPR.	TITLE

CAD FILE NO.
brady-pile-clip
DRAWING NO.
LA-231
SHEET NO 19 OF 23

\la-231\brady-pile-clip.dgn Feb 15 1999 16:18:51

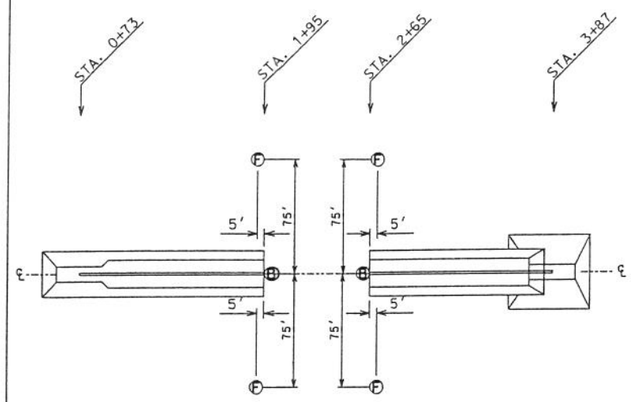

SITE 6-PLAN
SIGN DETAILS

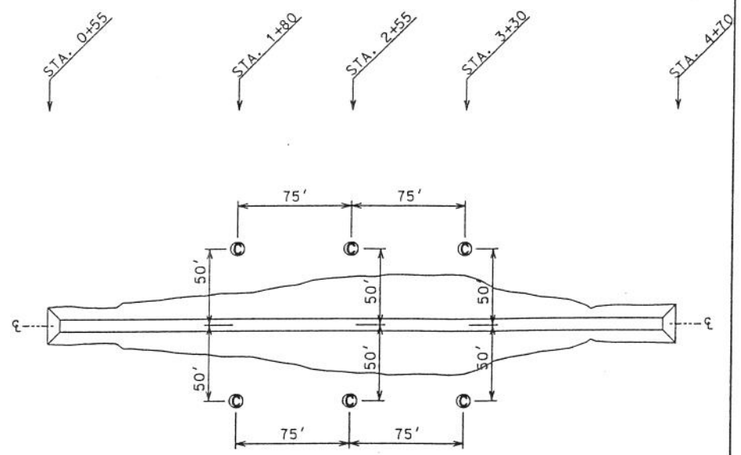

THE SIX (6) SIGNS REQUIRED AT SITE 7 WILL BE SUPPLIED BY NRCS AT NO COST TO THE CONTRACTOR.

SITE 7-PLAN
SIGN DETAILS

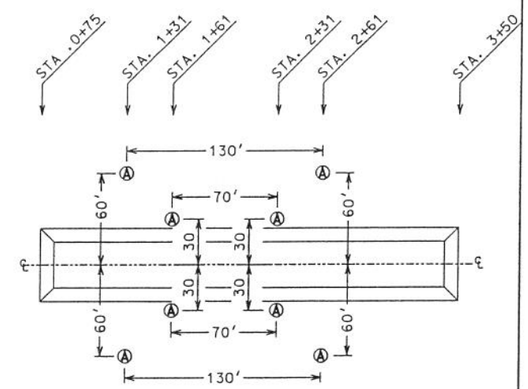

SITE 10-PLAN
SIGN DETAILS

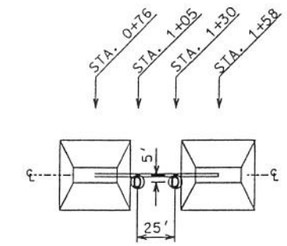

SITE 14-PLAN
SIGN DETAILS

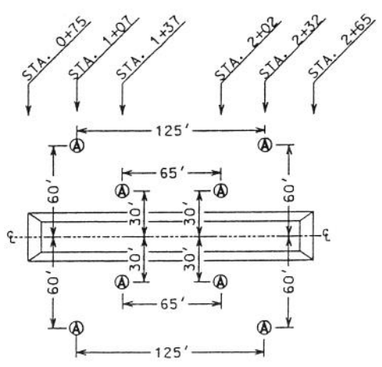

SITE 20-PLAN
SIGN DETAILS

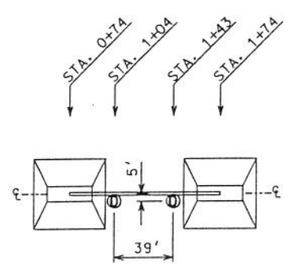

SITE 21-PLAN
SIGN DETAILS

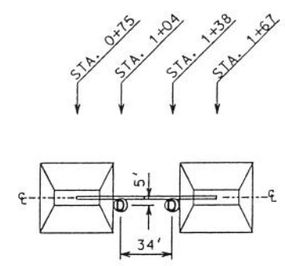

SITE 23-PLAN
SIGN DETAILS

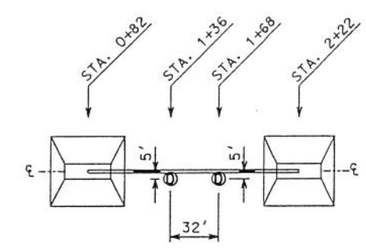

SITE 24-PLAN
SIGN DETAILS

SIGN DETAIL LEGEND

(A)—12"x50' TIMBER PILE WITH WARNING SIGN (DANGER OBSTRUCTION PROCEED WITH CAUTION, AND DIRECTIONAL SIGN.)

(B)—12"x50' TIMBER PILE WITH WARNING SIGN (DANGER OBSTRUCTION PROCEED WITH CAUTION, AND DIRECTIONAL SIGN, BOTH FACES.)

(C)—12"x50' TIMBER PILE WITH WARNING SIGN (DANGER DO NOT PROCEED)

(D)—12"X50' TIMBER PILE WITH WARNING SIGN (DANGER DO NOT PROCEED, BOTH FACES.)

(F)—12"X50' 4 -TIMBER PILE CLUSTER WITH NAVIGATION AID SIGNS AND NAVIGATION OBSTRUCTION LIGHT

50 0 50 100 150 200
SCALE IN FEET

STATE OF LOUISIANA
J. J. GLERING, III
REG. NO. 24951
REGISTERED PROFESSIONAL ENGINEER IN CIVIL ENGINEERING

Date 3/99
Approved by
Title
Title

Designed Cherie LaFleur
Drawn A. J. Gremillion
Traced
Checked James N. Moore
Date

WARNING SIGN LOCATIONS
CONSTRUCTION UNIT NO. 2
BRADY CANAL HYD. REST. - PTE-26B
TERREBONNE PARISH, LOUISIANA

U.S. DEPARTMENT OF AGRICULTURE - NATURAL RESOURCES CONSERVATION SERVICE

REVISIONS
DATE | APPR. | TITLE

CAD FILE NO.
sign-plan
DRAWING NO.
LA-231
SHEET NO 20 OF 23

c:\drawla-231\sgn-plan.dgn Mar 03, 1999 11:22:58

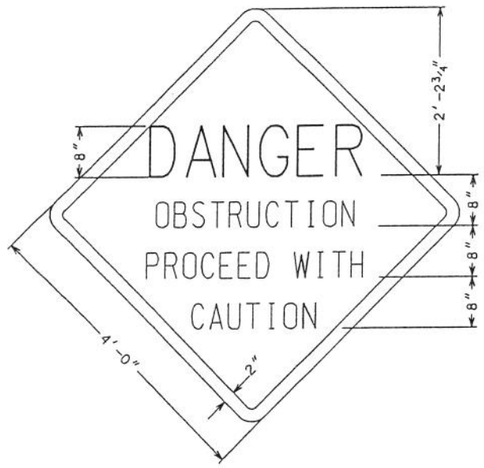

WARNING SIGN DETAILS
(USED WITH SIGN TYPE A AND B)

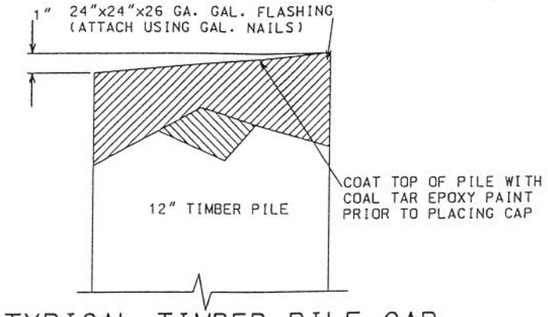

TYPICAL TIMBER PILE CAP
(NOT TO SCALE)

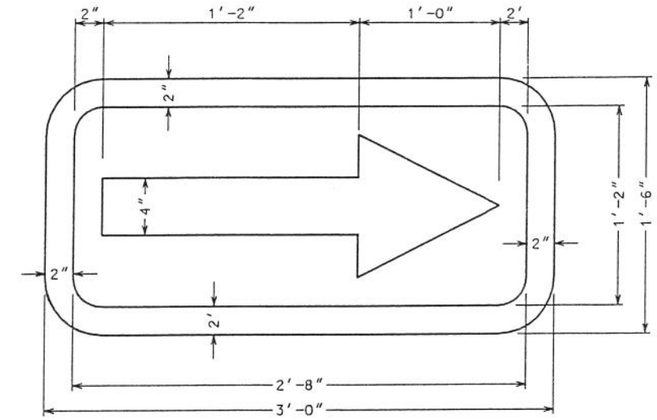

DIRECTIONAL SIGN DETAILS
(USED WITH SIGN TYPE A AND B)

NOTES:
1. SIGNS SHALL BE CONSTRUCTED USING 3/16" PLATE 6061 ALUMINUM.
2. THE 2" BORDER SHALL BE A RETRO-REFLECTIVE MATERIAL OF ORANGE COLOR
3. THE LETTERING AND ARROW FIELD SHALL BE A RETRO-REFLECTIVE MATERIAL OF WHITE COLOR
4. THE LETTERING AND ARROWS FOR THE SIGNS SHALL BE BLACK.

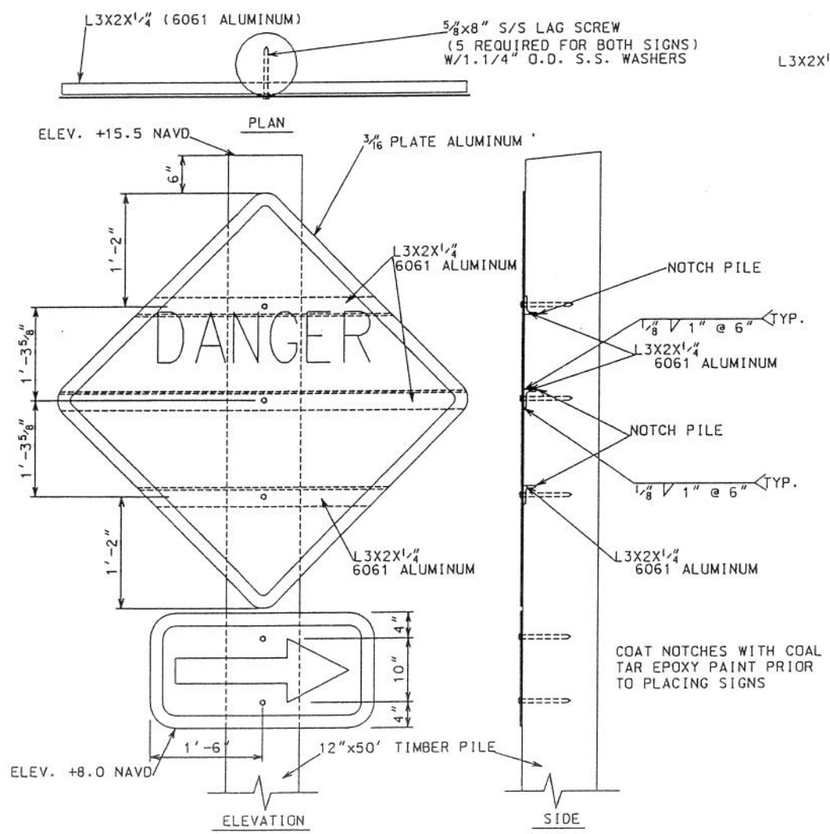

SIGN TYPE A - DETAILS
(USED AT STRUCTURES 10 & 20)

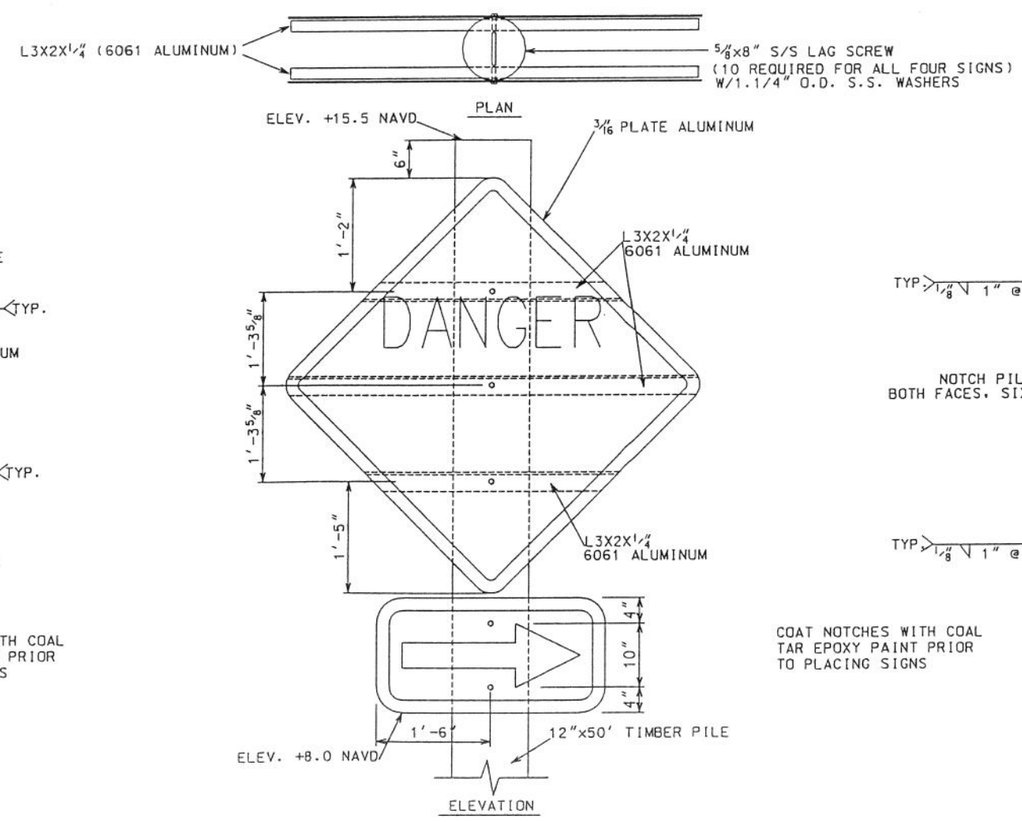

SIGN TYPE B - DETAILS
(USED AT STRUCTURE 6)

Designed C.E. LaFleur Date 2/98
Drawn A. J. Gremillion 2/98
Traced
Checked James N. Moore 2/99
Approved by Date 3/99
Title
Title

WARNING SIGN DETAIL
CONSTRUCTION UNIT NO. 2
BRADY CANAL HYD. REST. - PTE-26B
TERREBONNE PARISH, LOUISIANA

U.S. DEPARTMENT OF AGRICULTURE - NATURAL RESOURCES CONSERVATION SERVICE

REVISIONS		
DATE	APPR.	TITLE

STATE OF LOUISIANA
E. J. GIERING, III
REG. NO. 18933
REGISTERED
PROFESSIONAL ENGINEER
IN
CIVIL ENGINEERING

CAD FILE NO.
SIGN-DET1
DRAWING NO.
LA-231
SHEET NO 21 OF 23

c:\ldrawl\la231\signdet1.dgn Feb 15 1999 17:19:00

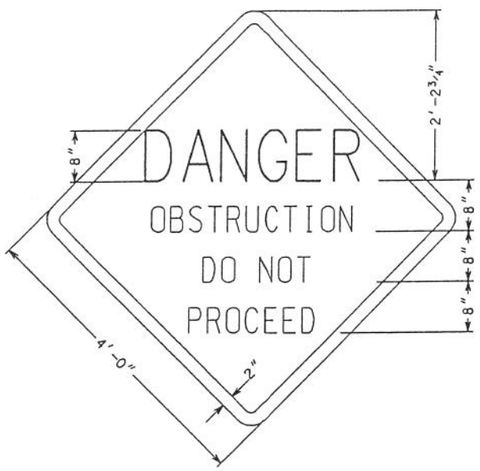

WARNING SIGN DETAILS
(USED WITH SIGN TYPES C & D)

THE SIX (6) TYPE "C" SIGNS REQUIRED AT SITE 7 WILL BE SUPPLIED BY NRCS, AT NO COST TO THE CONTRACTOR.

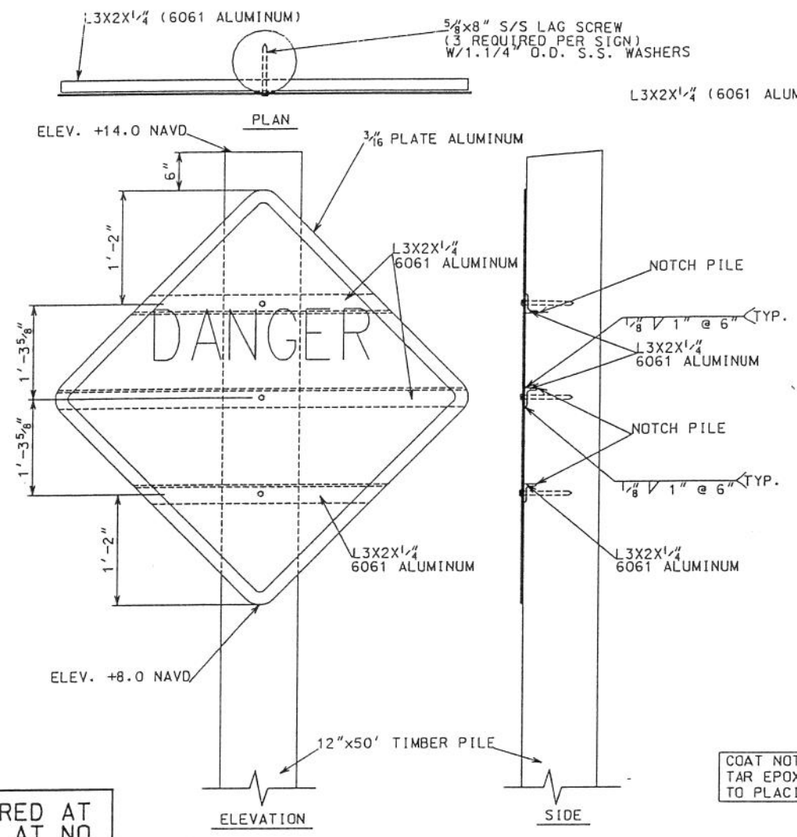

COAT NOTCHES WITH COAL TAR EPOXY PAINT PRIOR TO PLACING SIGNS

SIGN TYPE C - DETAILS
(USED AT STRUCTURE 7 ONLY)

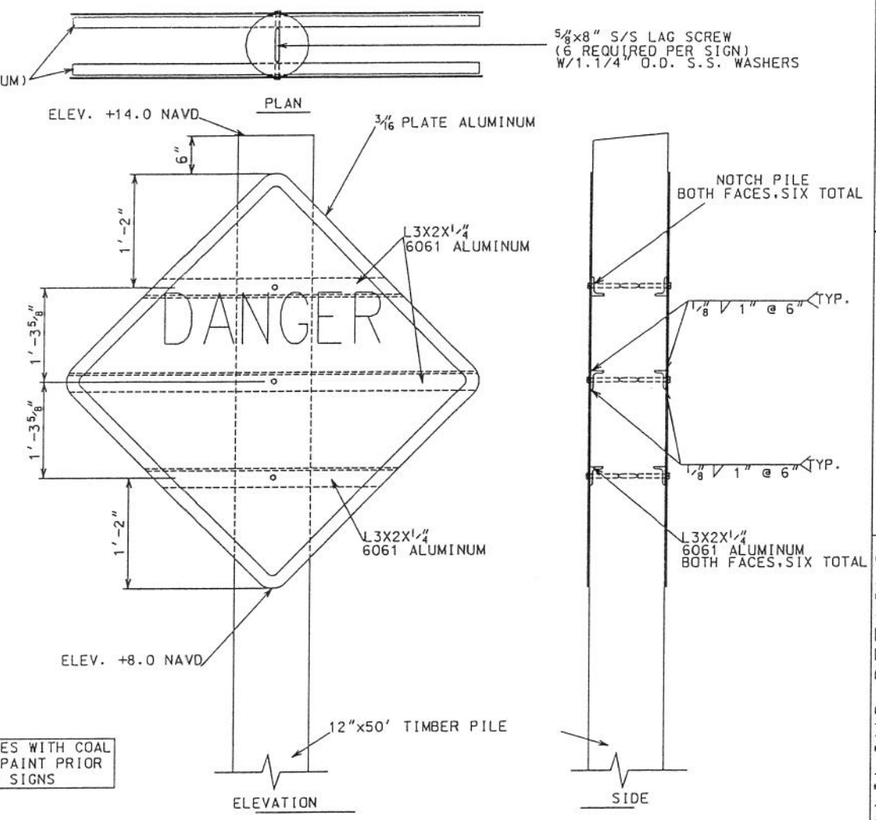

SIGN TYPE D - DETAILS
(USED AT STRUCTURES 14,21,23&24)

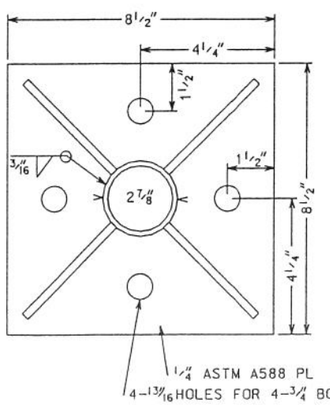

NOTE:
THE BASE PLATE DETAIL BELOW WILL APPLY WHEREVER SIGN TYPE "D" AND RAILING ARE USED.

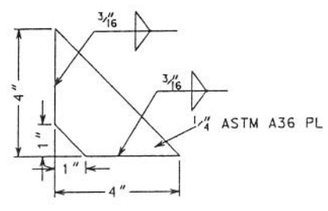

RAILING AND SIGN SUPPORT BASE PLATE
(NOT TO SCALE)

THE RAILING SHALL BE PAINTED AS SPECIFIED IN CONSTRUCTION SPECIFICIATION 82, CLEANING AND PAINTING METALWORK.

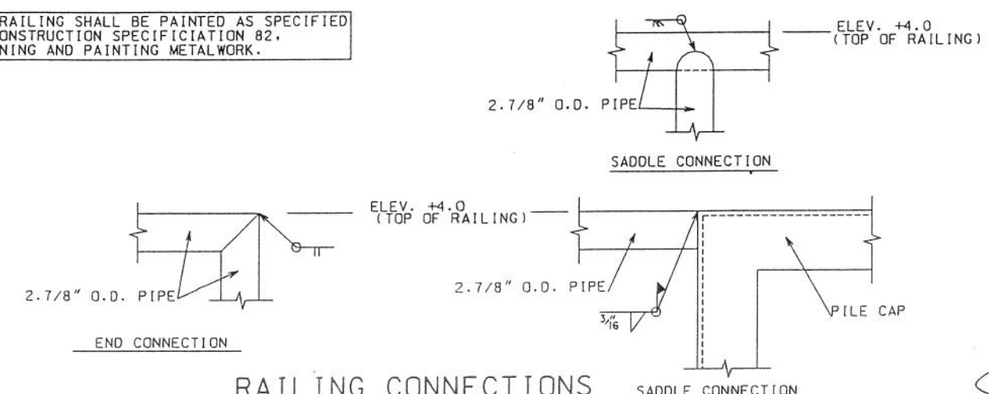

RAILING CONNECTIONS
(NOT TO SCALE)

STATE OF LOUISIANA
G. J. GIERING, III
REG. NO. 24911
REGISTERED PROFESSIONAL ENGINEER IN CIVIL ENGINEERING

Designed	C.E.LaFleur	Date	2/98
Drawn	A. J. Gremillion		2/98
Traced			
Checked	James N. Moore		2/99

Date 3/99
Approved by
Title
Title

WARNING SIGN AND RAILING DETAILS
CONSTRUCTION UNIT NO. 2
BRADY CANAL HYD. REST. - PTE-26B
TERREBONNE PARISH, LOUISIANA

U.S. DEPARTMENT OF AGRICULTURE - NATURAL RESOURCES CONSERVATION SERVICE

REVISIONS
DATE | APPR. | TITLE

CAD FILE NO. SIGN-DET2
DRAWING NO. LA-231
SHEET NO 22 OF 23

c:\jdrawdis.231\sign-det2.dgn Mar 03, 1999 11:54:22

NOTES:

1. ALL 3/4 DIA. ALL THREAD TIE RODS SHALL BE SECURED BY NOTCHED IN PLACE OGEE WASHERS AND TACK WELDED NUTS.
2. 3 RAPS OF 1/2" DIA. CABLE MEETING ASTM A-416 AND ASTM A-882/A-882M-92 BETWEEN THE 3-3/4 DIA. ALL-THREAD ASTM A-615 GR60 GALVANIZED AND EPOXY COATED TIE RODS.
3. THE 1/2" DIA. CABLE SHALL BE SECURED USING 3 STAINLESS STEEL CLAMPS.
4. THE 3/4 DIA. ALL-THREAD TIE RODS SHALL BE A MINIMUM OF 6" BELOW TOP OF BATTER PILE AND AND 3" VERTICAL CLEARANCE FROM ADJACENT TIE ROD.
5. ALL TIMBER PILES FOR FOUR PILE NAVIGATION AID DOLPHIN SHALL BE 12" x 50'.

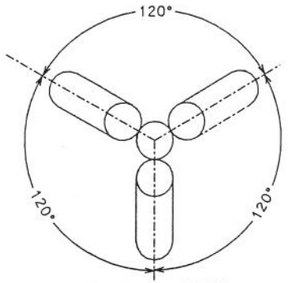

TOP VIEW

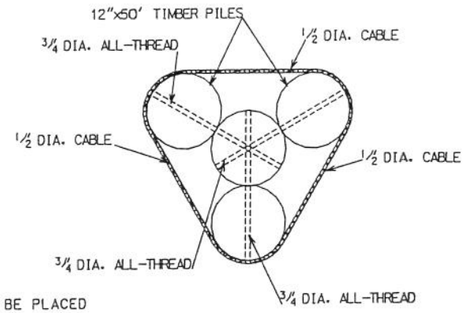

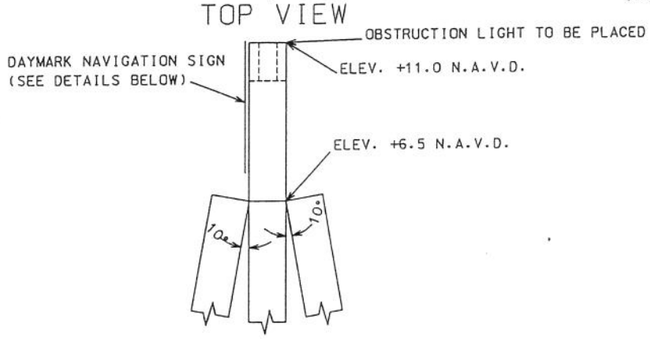

ELEVATION VIEW

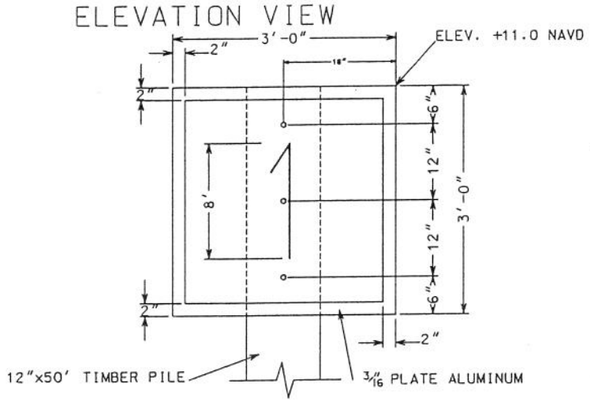

DAYMARK NAVIGATION AID
(PORT SIDE - ODD NUMBER)

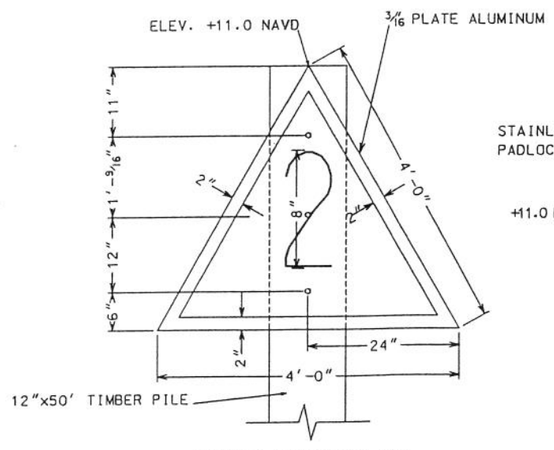

DAYMARK NAVIGATION AID
(STARBOARD SIDE - EVEN NUMBER)

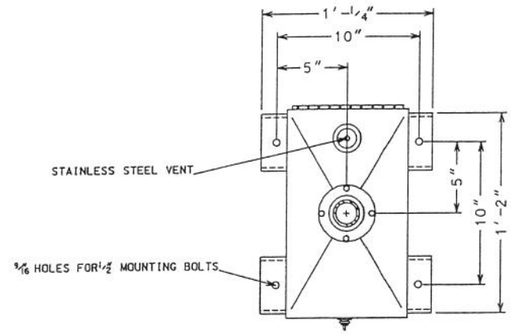

SECTION-PLAN

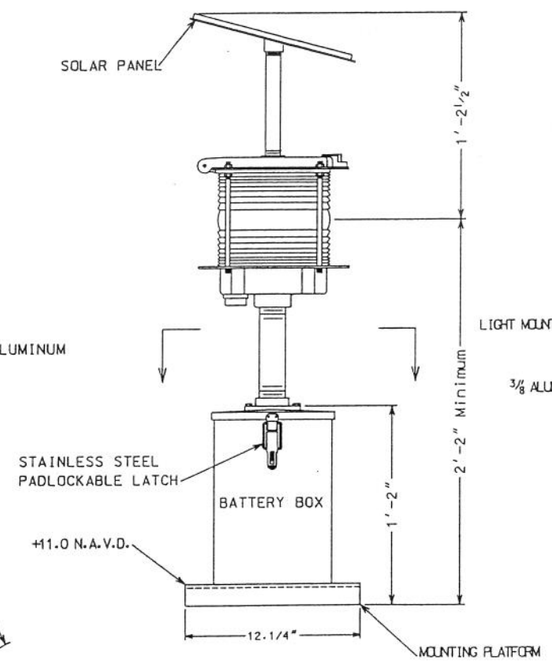

ELEVATION

2.5 SEC. DAYLIGHT

1. NOTCH ROUND TIMBER PILE FOR FLUSH ALUMINUM MOUNTING BRACKET ATTACHMENT.
2. HOLES IN ALUMINUM SHALL BE 1/16" OVERSIZE AND HOLES IN ROUND TIMBER PILE SHALL BE 1/8" OVERSIZE FOR THEIR CORRESPONDING BOLTS.

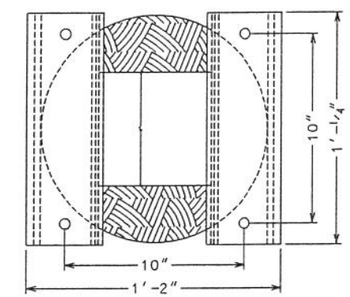

PLAN

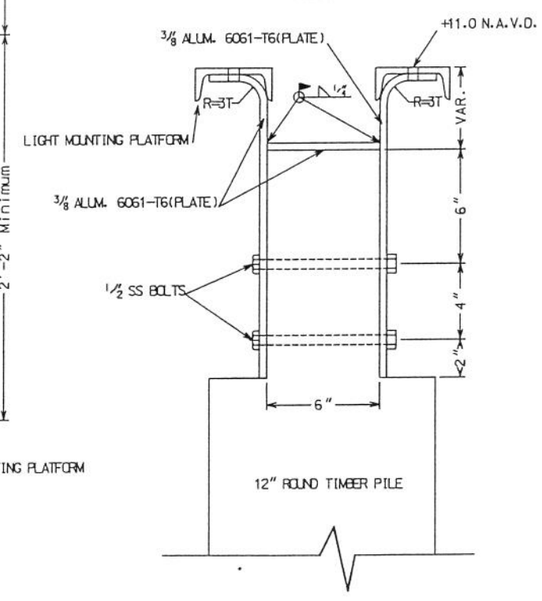

ELEVATION

MOUNTING DETAILS-2.5 SEC. DAYLIGHT

NOTES:

1. SIGNS SHALL BE PLACED ON SIDES OF CHANNEL AS SEEN WHEN ENTERING FROM BAYOU DE CADE.
2. THE BORDER ON THE STARBOARD DAYMARK WILL BE A RETRO-REFLEVCTIVE MATERIAL OF RED COLOR. THE AREA INSIDE THE BORDERS WILL BE A RETRO-REFLECTIVE MATERIAL OF WHITE COLOR. THE NUMBERS WILL BE BLACK.
3. THE BORDER ON THE PORT SIDE DAYMARK WILL BE A RETRO-REFLECTIVE MATERIAL OF GREEN COLOR. THE AREA INSIDE THE BORDER WILL BE A RETRO-REFLECTIVE MATERIAL OF WHITE COLOR. THE NUMBERS WILL BE BLACK.
4. ALL DAYMARK NAVIGATION AIDS SHALL ABIDE BY U.S.C.G. REGULATIONS.
5. SIGNS SHALL BE SECURED TO TIMBER PILE WITH 3-5/8"x8" STAINLESS STEEL LAG SCREWS WITH 1 1/4" O.D. S.S. WASHER.

SIGN DETAIL - TYPE "F"

SIGN DETAIL - TYPE "F"

STATE OF LOUISIANA
GILBERT L. GILLIS III
26410-1933
REGISTERED PROFESSIONAL ENGINEER
IN
CIVIL ENGINEERING

Date
Approved by 3/8
Title
Title

Designed Cherie LaFleur
Drawn A. J. Gremillion
Traced
Checked James N. Moore

TYPE F WARNING SIGN DETAILS
CONSTRUCTION UNIT NO. 2
BRADY CANAL HYD. REST. - PTE-26B
TERREBONNE PARISH, LOUISIANA

U.S. DEPARTMENT OF AGRICULTURE - NATURAL RESOURCES CONSERVATION SERVICE

REVISIONS
DATE APPR. TITLE

CAD FILE NO.
brady-day-mark
DRAWING NO.
LA-231
SHEET NO 23 OF 23

ls231bradwarsign.mark.dgn Feb 15 1999 18:34:08