United States Department of Agriculture

NRCS

Natural Resources Conservation Service
3737 Government Street
Alexandria, LA 71302

April 8, 2002

Mr. Van Cook
Project Manager
LDNR / Coastal Restoration Division
UNO Box 1102
New Orleans, LA 70148

Mr. Tom Podany
Chief, CWPPRA Program Manager
US Army Engineer District, New Orleans
P.O. Box 60267
New Orleans, Louisiana 70506

Gentlemen:

Re: PL-646 – BA-23
Barataria Bay Waterway West Side Shoreline Protection

Enclosed are the "As Built" drawings for the referenced project.

Please direct any questions concerning this Project Completion Report to Brad Sticker at (318) 473-7791.

Sincerely,

/s/
Ed Giering, P.E.
State Conservation Engineer

Enclosure

cc: Bruce Lehto, ASTC/Water Resources, NRCS, Alexandria, LA (electronic distribution)
Britt Paul, Water Resources Planning Staff Leader, NRCS, Alexandria, LA (electronic distribution)
Dr. Bill Good, LDNR – CRD, Baton Rouge, LA (electronic distribution)
Garrett Broussard, LDNR-CRD, Baton Rouge, LA (electronic distribution)
Richard Abshire, Project Manager, NRCS, Baton Rouge, LA (electronic distribution)
Brad Sticker, Civil Engineer, NRCS, Alexandria, LA (electronic distribution)
Dale Garber, COTR, NRCS, Crowley, LA (electronic distribution)

The Natural Resources Conservation Service provides leadership in a partnership effort to help people conserve, maintain, and improve our natural resources and environment.

An Equal Opportunity Provider and Employer

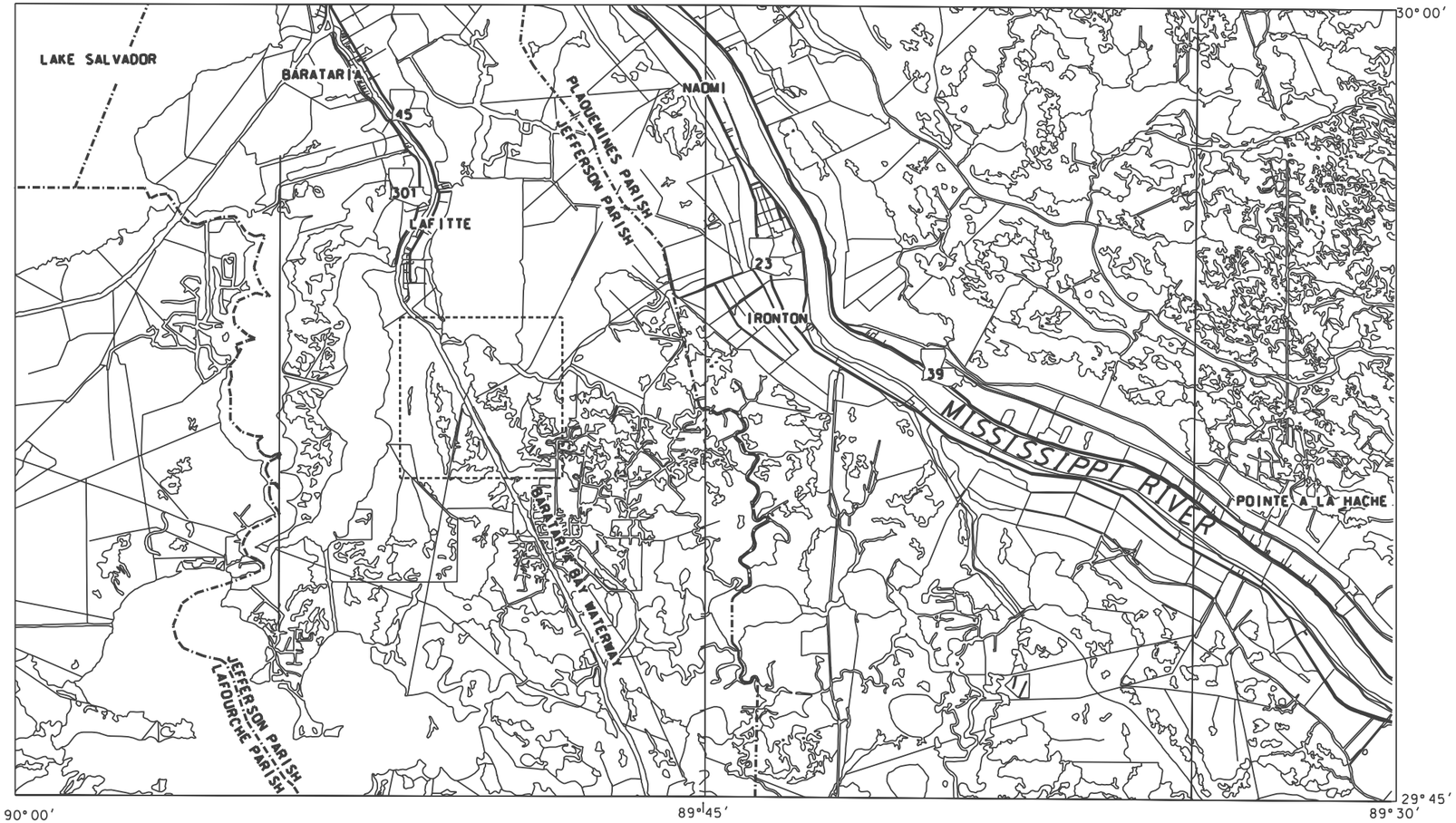

BARATARIA BAY WATERWAY
WEST BANK PROTECTION PROJECT PBA-12A

BUILT UNDER COASTAL WETLANDS PLANNING, PROTECTION AND RESTORATION ACT OF PUBLIC LAW 101-646
BY
LOUISIANA DEPARTMENT OF NATURAL RESOURCES
WITH THE ASSISTANCE OF
NATURAL RESOURCES CONSERVATION SERVICE
OF THE
UNITED STATES DEPARTMENT OF AGRICULTURE
2000

"AS-BUILT"

LEGEND

- PROJECT AREA
- STATE HIGHWAY
- PARISH BOUNDARY

VICINITY MAP

LOCATION IN LOUISIANA
(JEFFERSON PARISH)

1 0 1 2 3
SCALE IN MILES

N

INDEX OF DRAWINGS

1 COVER SHEET-VICINITY MAP
2 PLAN VIEW- WEST BANK ALIGNMENT
3 PLAN VIEW- WEST BANK ALIGNMENT
4 SITE PLAN-WATER CONTROL STRUCTURE
5 ELEVATION VIEW-WATER CONTROL STR.
6 PLAN VIEW-WATER CONTROL STR.
7 PIPE SUPPORT AND WALKWAY-DETAILS
8 HALF-ROUND CONTROL STR.
9 STOPLOG GUIDE AND LOCKBAR
10 STOP LOG HOIST
11 RISER PLATFORM DETAILS
12 PLAN VIEW-DIKE,STA.1338+17 TO STA.1356+06
13 PLAN VIEW-DIKE,STA.1414+33 TO STA.1459+36
14 PLAN VIEW-DIKE,STA.1459+36 TO STA.1495+63
15 PLAN VIEW-DIKE,STA.1495+71 TO STA.1497+13
16 DETAILS- ROCK DIKE

SUPPLEMENTAL AS BUILT DRAWINGS

16A1 SOUTH END PROFILE - AS BUILT
16A2 SOUTH END SECTIONS - AS BUILT
16A3 NORTH END PROFILE - AS BUILT
16A4 NORTH END SECTIONS - AS BUILT
16A5 LOCATION CANAL *OUTLET* - AS BUILT
16A6 LOCATION CANAL *INLET* - AS BUILT

"AS-BUILT PLANS"

SUBMITTED BY: DALE J. GARBER — GOVERNMENT REPRESENTATIVE — 9/27/01 DATE

APPROVED BY: BRADLEY A. STICKER — ASSISTANT STATE CONSERVATION ENGINEER — 9/28/01 DATE

R.J. GIERING III — STATE CONSERVATION ENGINEER — 9/28/01 DATE

Contract No. 50-7217-0-5 Date 9/27/01
Contractor BERTUCCI CONTRACTING CORP.
Inspector JEREMY GEORGE
Date of Completion 11/07/00

		Date
Designed	J. CHUA	04/99
Drawn	D.J. WILMORE	04/99
Traced		
Checked	J. MOORE	04/99

Approved by R.J. GIERING III 11/99
Title STATE CONSERVATION ENGINEER ALEXANDRIA, LA.
Title

COVER SHEET - VICINITY MAP
BARATARIA BAY WATERWAY-WEST BANK
PROJECT #PBA-12A
JEFFERSON PARISH, LOUISIANA

U.S. DEPARTMENT OF AGRICULTURE - NATURAL RESOURCES CONSERVATION SERVICE

REVISIONS: DATE | APPR. | TITLE

CAD FILENAME 28601.DGN
PROJECT NO. LA286
SHEET NO 1 OF 16

...\AS-BUILT\drawings\LA28601.DGN 04/02/02 02:45:41 PM

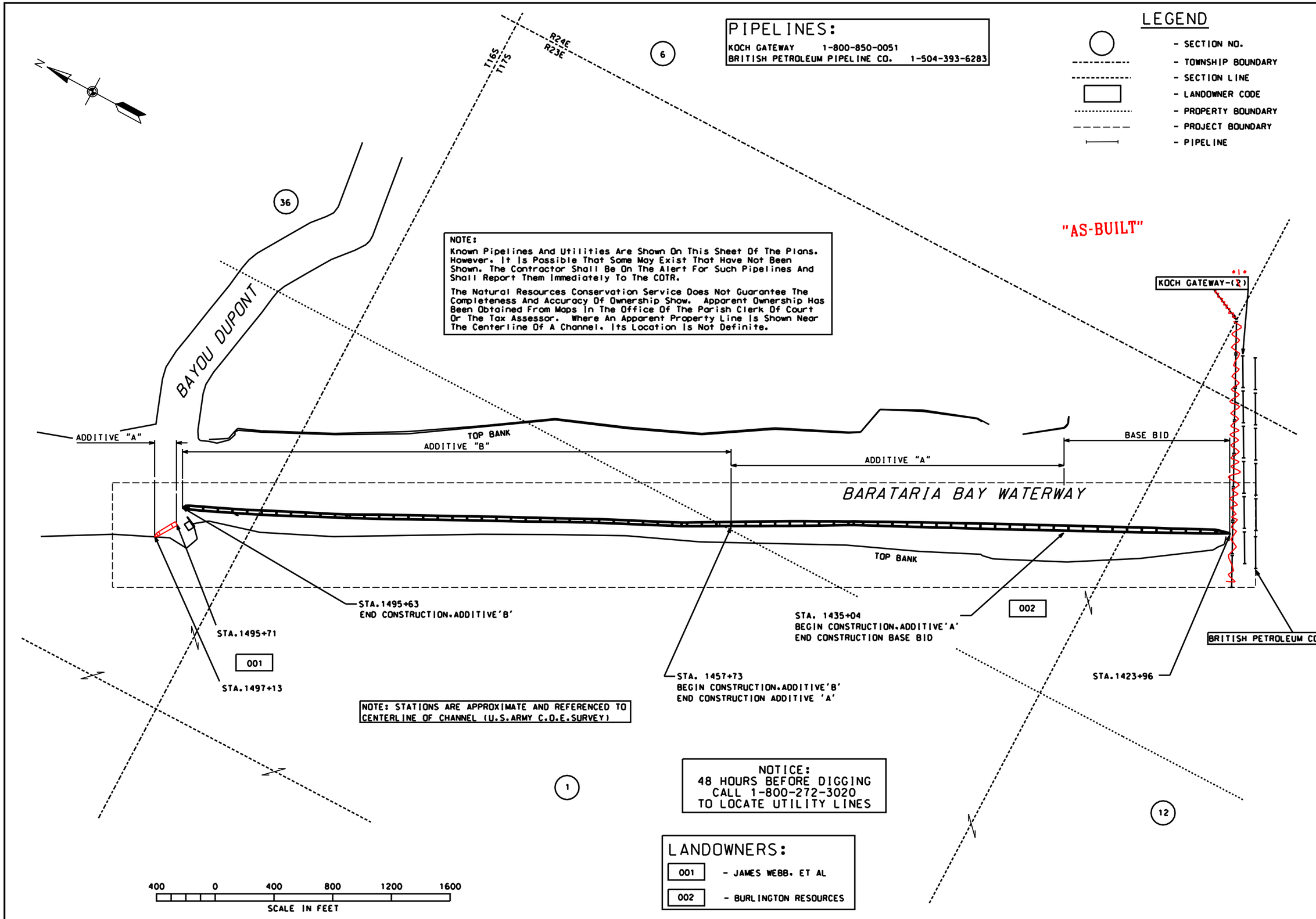

Approved by E.J. GIERING III Date 11/99
Title STATE CONSERVATION ENGINEER

Designed J. CHUA 05/99
Drawn D.J. WILMORE 05/99
Traced
Checked J. MOORE 05/99

PLAN VIEW - WEST BANK ALIGNMENT
BARATARIA BAY WATERWAY-WEST BANK
PROJECT #PBA-12A
JEFFERSON PARISH, LOUISIANA

U.S. DEPARTMENT OF AGRICULTURE - NATURAL RESOURCES CONSERVATION SERVICE

REVISIONS
DATE | APPR. | TITLE

CAD FILENAME
LA28602.DGN

PROJECT NO.
LA286

SHEET NO 2 OF 16

...\AS-BUILT\drawings\LA28602.DGN 04/02/02 02:48:33 PM

PIPELINES:
KOCH GATEWAY 1-800-850-0051
BRITISH PETROLEUM CO. 1-504-393-6283

NOTICE:
48 HOURS BEFORE DIGGING
CALL 1-800-272-3020
TO LOCATE UTILITY LINES

NOTE:
Known Pipelines And Utilities Are Shown On This Sheet Of The Plans. However, It Is Possible That Some May Exist That Have Not Been Shown. The Contractor Shall Be On The Alert For Such Pipelines And Shall Report Them Immediately To The COTR.

The Natural Resources Conservation Service Does Not Guarantee The Completeness And Accuracy Of Ownership Show. Apparent Ownership Has Been Obtained From Maps In The Office Of The Parish Clerk Of Court Or The Tax Assessor. Where An Apparent Property Line Is Shown Near The Centerline Of A Channel, Its Location Is Not Definite.

LEGEND
- SECTION NO.
- TOWNSHIP BOUNDARY
- SECTION LINE
- LANDOWNER CODE
- PROPERTY BOUNDARY
- PROJECT BOUNDARY
- PIPELINE

"AS-BUILT"

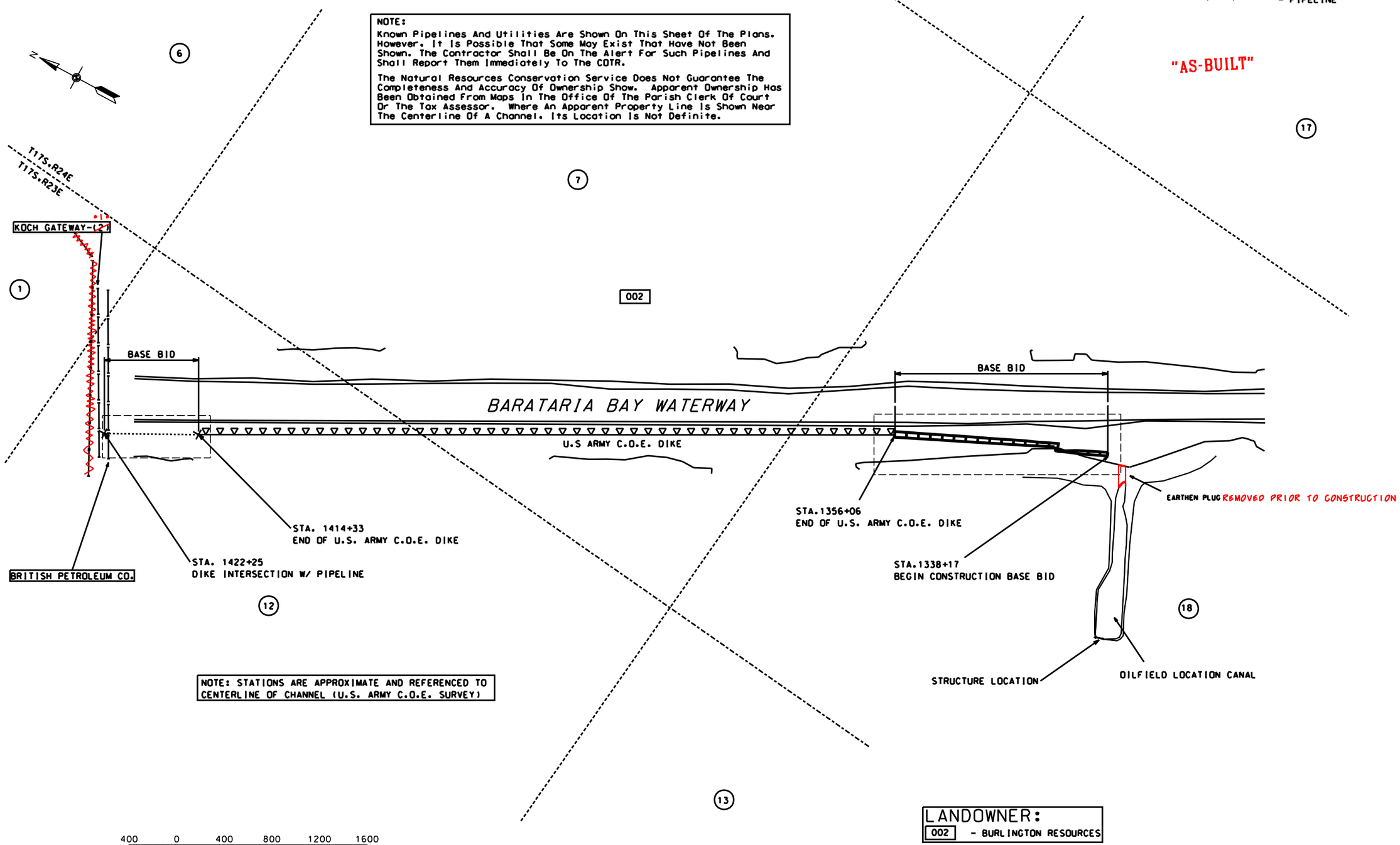

NOTE: STATIONS ARE APPROXIMATE AND REFERENCED TO CENTERLINE OF CHANNEL (U.S. ARMY C.O.E. SURVEY)

LANDOWNER:
002 - BURLINGTON RESOURCES

400 0 400 800 1200 1600
SCALE IN FEET

Approved by E.J. GIERING III Date 11/99
Title STATE CONSERVATION ENGINEER

Designed J. CHUA Date 05/99
Drawn D.J. WILMORE 05/99
Traced
Checked J. MOORE 05/99

PLAN VIEW - WEST BANK ALIGNMENT
BARATARIA BAY WATERWAY-WEST BANK
PROJECT #PBA-12A
JEFFERSON PARISH, LOUISIANA

U.S. DEPARTMENT OF AGRICULTURE - NATURAL RESOURCES CONSERVATION SERVICE

REVISIONS
DATE | APPR. | TITLE

CAD FILENAME
LA28603.DGN
PROJECT NO.
LA286
SHEET NO 3 OF 16

...\AS-BUILT\drawings\LA28603.DGN 04/02/02 02:49:53 PM

LANDOWNER ON ENTIRE PROJECT SITE-
JAMES S. WEBB ET AL

T17S,R24E
SECTION 18

NOTE:
No Known Pipelines And Utilities Are Shown On This Sheet Of The Plans. However, It Is Possible That Some May Exist That Have Not Been Shown. The Contractor Shall Be On The Alert For Such Pipelines And Shall Report Them Immediately To The COTR.

The Natural Resources Conservation Service Does Not Guarantee The Completeness And Accuracy Of Ownership Show. Apparent Ownership Has Been Obtained From Maps In The Office Of The Parish Clerk Of Court Or The Tax Assessor. Where An Apparent Property Line Is Shown Near The Centerline Of A Channel, Its Location Is Not Definite.

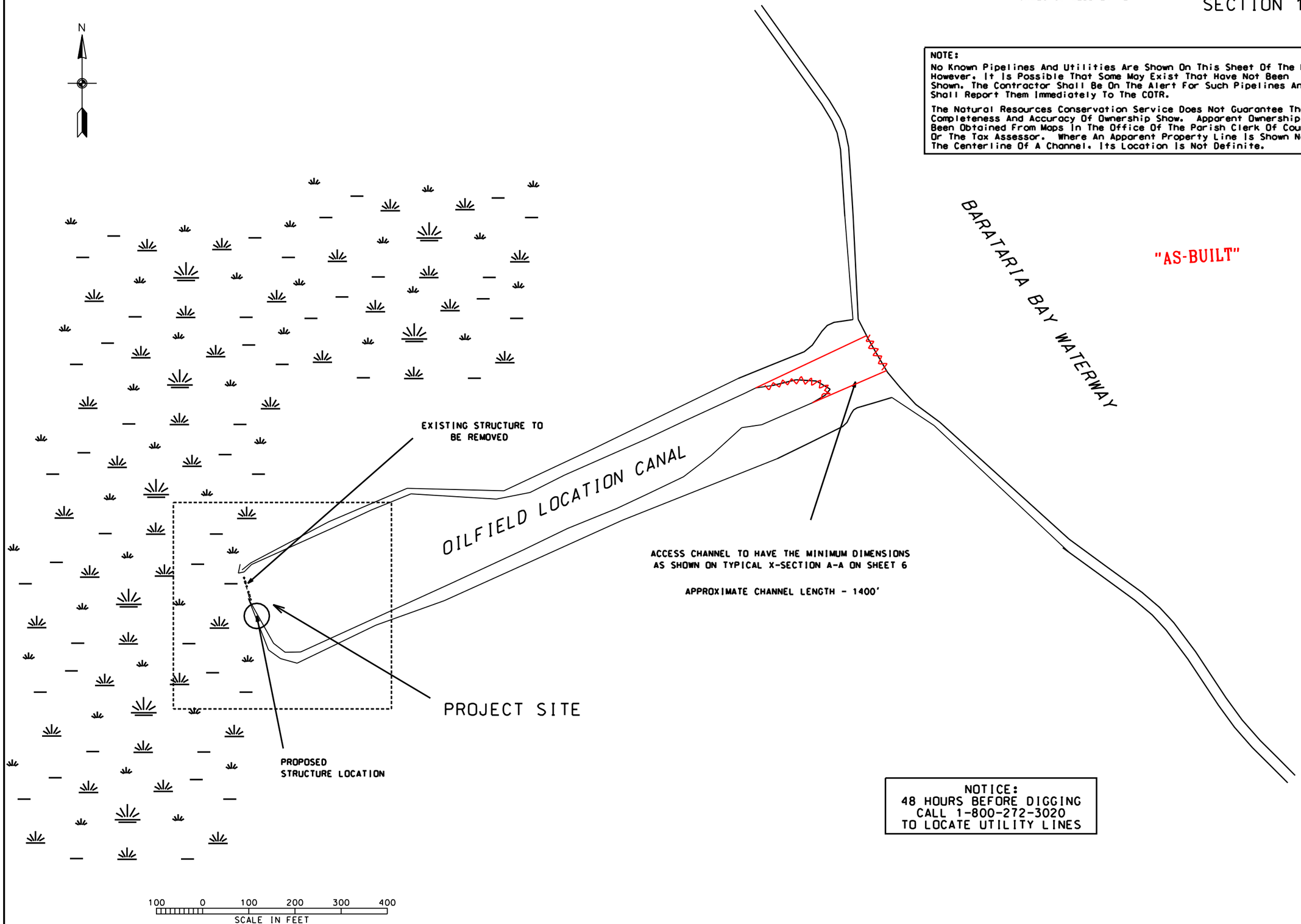

NOTICE:
48 HOURS BEFORE DIGGING
CALL 1-800-272-3020
TO LOCATE UTILITY LINES

Approved by E.J.GIERING III Date 11/99
Title STATE CONSERVATION ENGINEER
Title

Designed J. CHUA Date 05/99
Drawn D.J. WILMORE 05/99
Traced
Checked J. MOORE 05/99

SITE PLAN - WATER CONTROL STR.
BARATARIA BAY WATERWAY-WEST BANK
PROJECT #PBA-12A
JEFFERSON PARISH, LOUISIANA

U.S. DEPARTMENT OF AGRICULTURE - NATURAL RESOURCES CONSERVATION SERVICE

REVISIONS
DATE | APPR. | TITLE

CAD FILENAME
LA28604.DGN

PROJECT NO.
LA286

SHEET NO 4 OF 16

...\AS-BUILT\drawings\LA28604.DGN 04/02/02 02:50:42 PM

NOTE:
ALL ELEVATIONS NAVD 88 DATUM

"AS-BUILT"

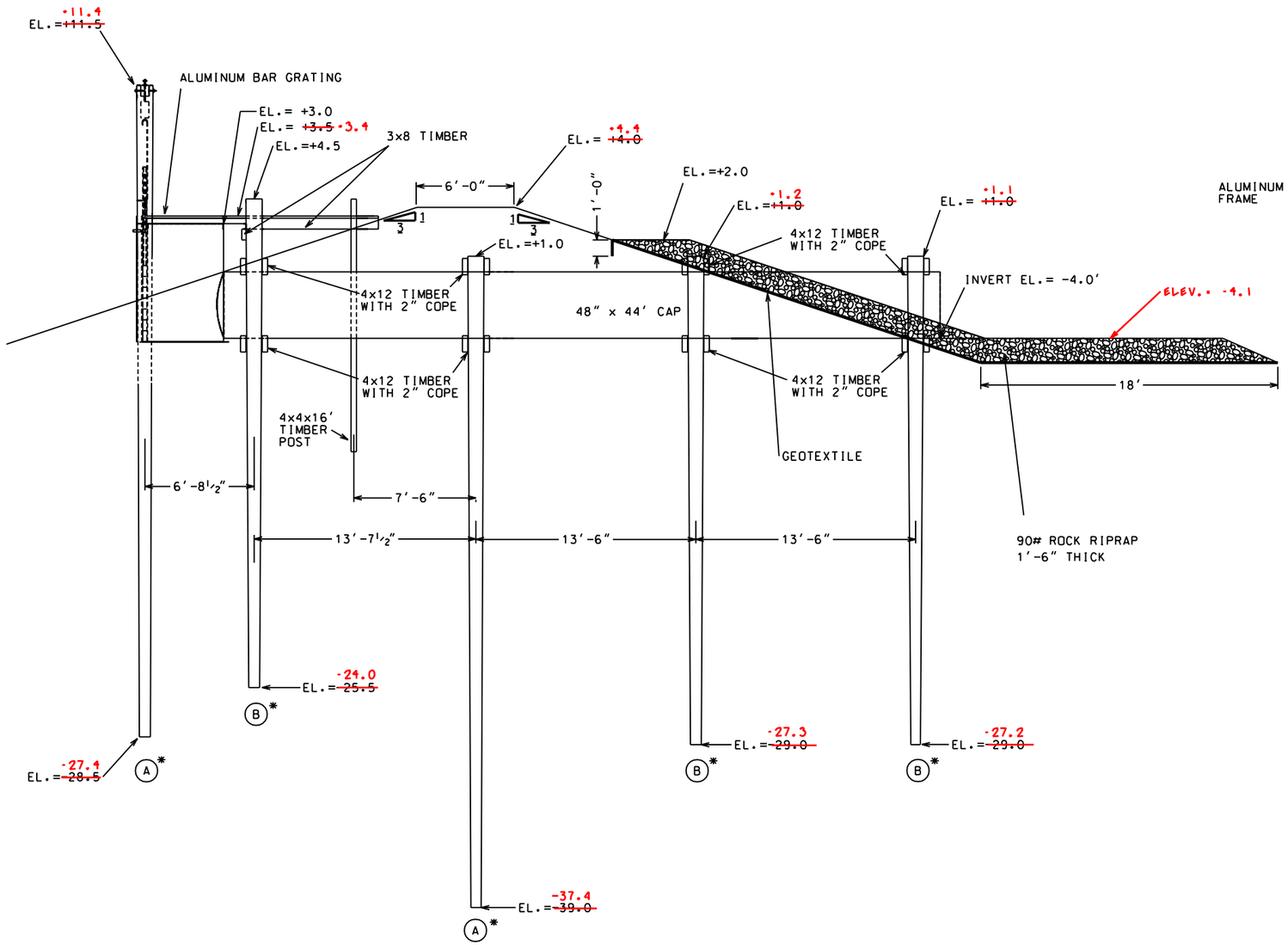

*-SEE SHEET 6 FOR PILING TABLE

LONGITUDINAL SECTION

BUTT ELEVATIONS AS SHOWN

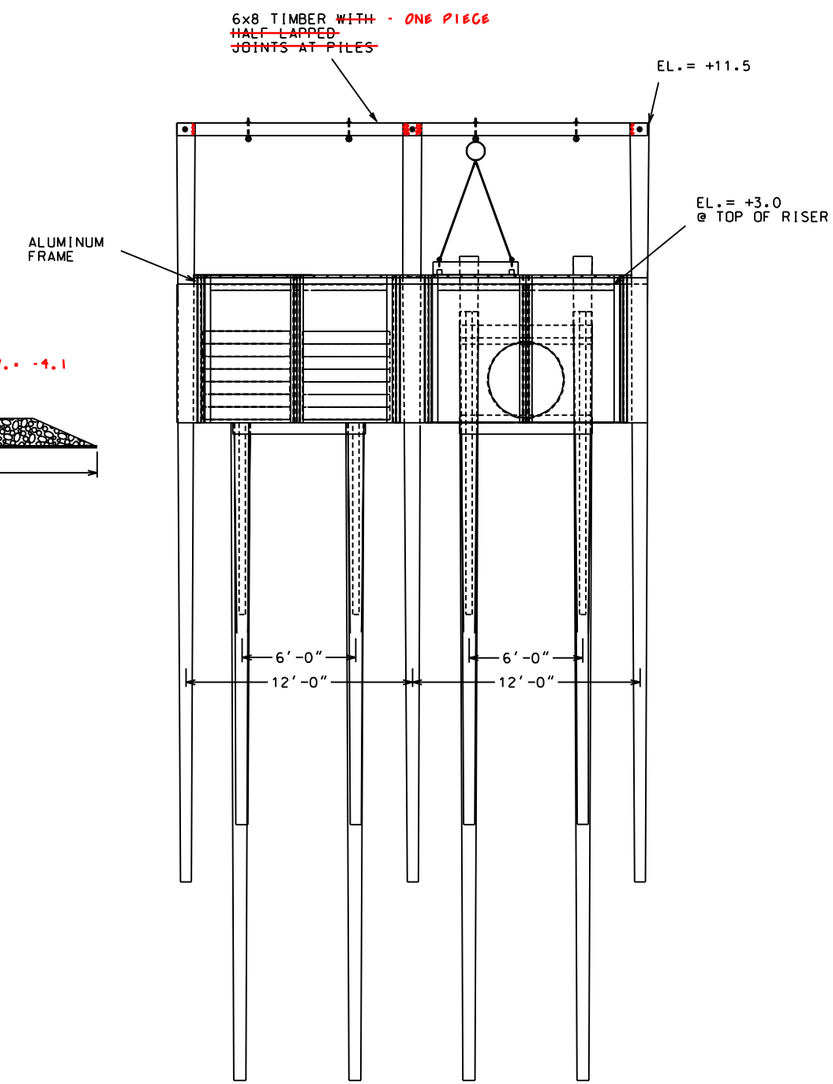

FRONT VIEW

		Date
Designed	J. CHUA	05/99
Drawn	D.J. WILMORE	05/99
Traced		
Checked	J.MOORE	05/99

		Date
Approved by	E.J.GIERING,III	11/99
Title	STATE CONSERVATION ENGINEER	
Title		

ELEVATION VIEW-WATER CONTROL STR.
BARATARIA BAY WATERWAY-WEST BANK
PROJECT #PBA-12A
JEFFERSON PARISH, LOUISIANA

U.S. DEPARTMENT OF AGRICULTURE - NATURAL RESOURCES CONSERVATION SERVICE

REVISIONS

DATE	APPR.	TITLE

CAD FILENAME
LA28605.DGN

PROJECT NO.
LA286

SHEET NO 5 OF 16

...\AS-BUILT\drawings\LA28605.DGN 04/02/02 02:54:59 PM

NOTES:
1. BEARING BARS AND GRATING TO BE FABRICATED IN THE FIELD TO ELIMINATE GAP BETWEEN RISERS
2. FASTENERS FOR ALUMINUM BAR GRATING TO MEET MANUFACTURERS RECOMMENDATIONS.
3. COPE GRATING AROUND CENTER PILE
4. ORIENT BEARING BARS PARALLEL TO STOPLOG GUIDE FRAME

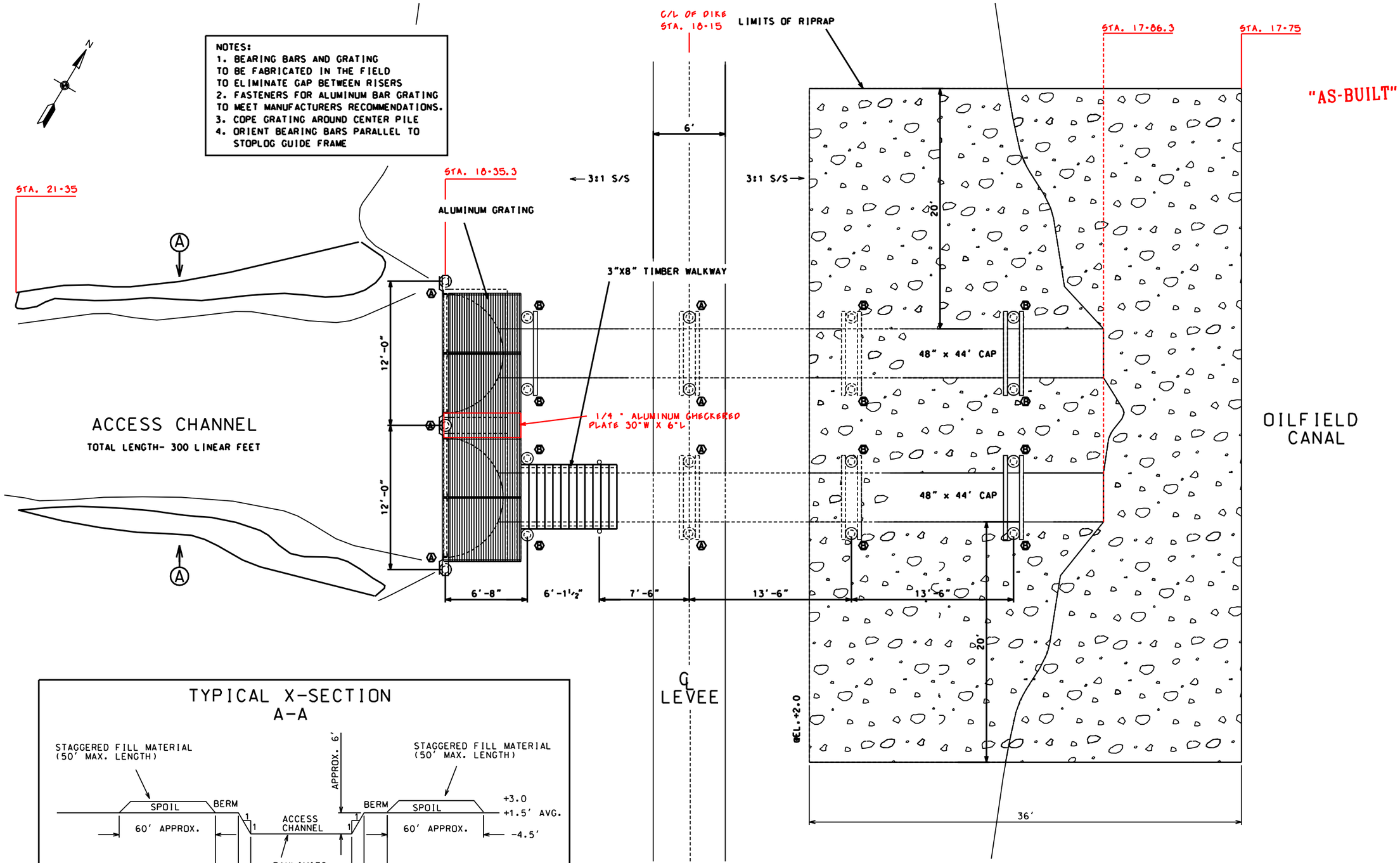

LEVEE APPROXIMATELY 225' IN LENGTH
TIE INTO EXISTING SPOILBANK

PLAN

TYPICAL X-SECTION A-A

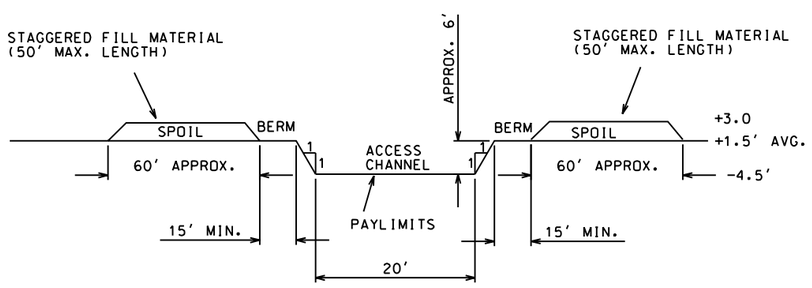

NOT TO SCALE

NOTE: ALL ELEVATIONS REFERENCE 0.0' NGVD

12" POLE PILE TABLE

MARK	QTY	LENGTH
A	7	40'
B	12	30'

1 0 1 2 3 4 5 6 7
SCALE IN FEET

		Date
Designed	J. CHUA	05/99
Drawn	D.J. WILMORE	05/99
Traced		
Checked	J. MOORE	05/99

Approved by E.J. GIERING III 11/99
Title STATE CONSERVATION ENGINEER
Title

REVISIONS
DATE | APPR. | TITLE

PLAN VIEW - WATER CONTROL STR.
BARATARIA BAY WATERWAY-WEST BANK
PROJECT #PBA-12A
JEFFERSON PARISH, LOUISIANA

U.S. DEPARTMENT OF AGRICULTURE - NATURAL RESOURCES CONSERVATION SERVICE

CAD FILENAME LA28606.DGN
PROJECT NO. LA286
SHEET NO 6 OF 16

...\AS-BUILT\drawings\LA28606.DGN 04/02/02 02:56:00 PM

"AS-BUILT"

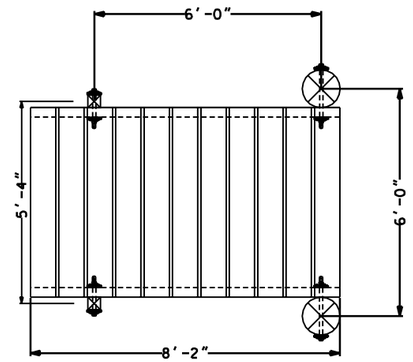

PLAN

Note:
Bolts shown shall be ¾" x length as required. Bolts, nuts, and ogee washers shall be galvanized and conform to material specifications 581 & 582.
All piling shall be "in-place" within 3" of plan location.

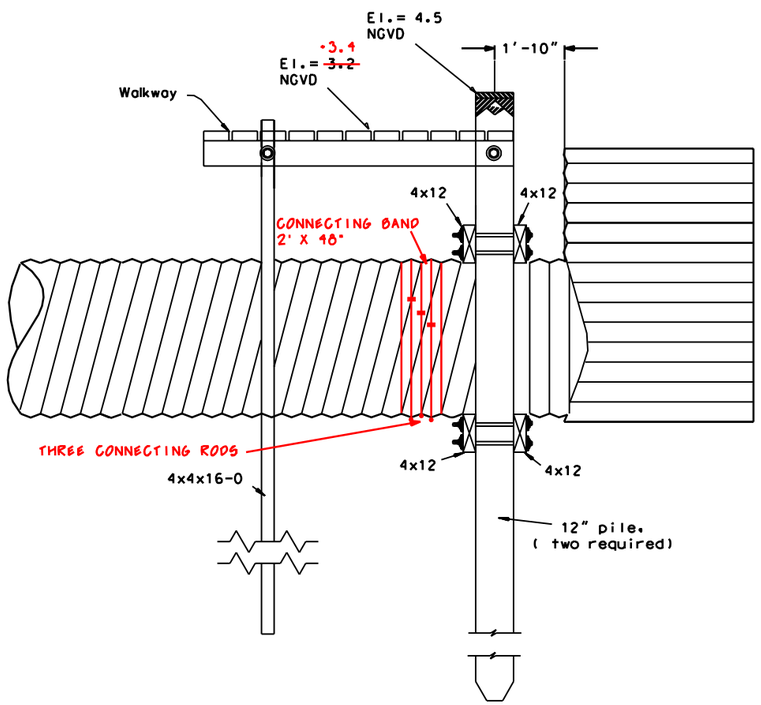

SIDE ELEVATION

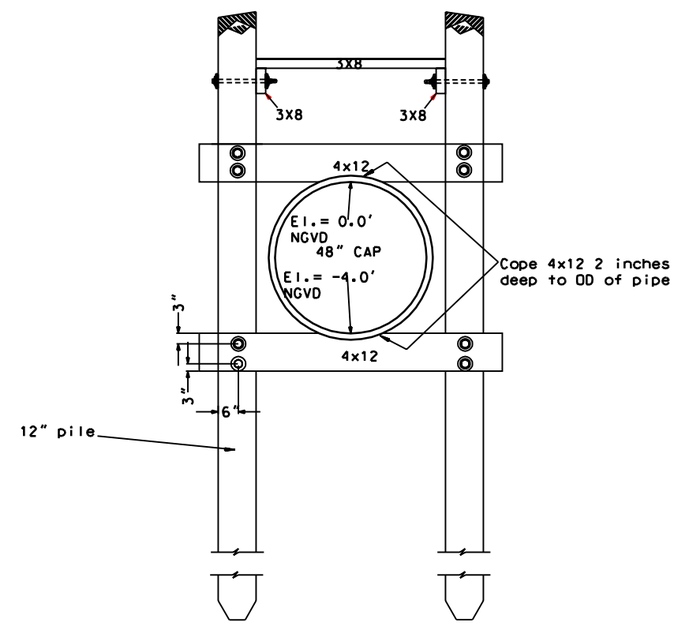

FRONT ELEVATION

1½ 0 1 2 3
SCALE IN FEET

		Date
Designed	J. CHUA	06/99
Drawn	D.J. WILMORE	06/99
Traced		
Checked	J. MOORE	06/99

Approved by E.J. GIERING III 11/99
Title STATE CONSERVATION ENGINEER ALEXANDRIA,LA.
Title

PIPE SUPPORT & WALKWAY - DETAILS
BARATARIA BAY WATERWAY-WEST BANK
PROJECT #PBA12A
JEFFERSON PARISH, LOUISIANA

U.S. DEPARTMENT OF AGRICULTURE - NATURAL RESOURCES CONSERVATION SERVICE

REVISIONS

DATE	APPR.	TITLE

CAD FILENAME
28607.DGN

PROJECT NO.
LA286

SHEET NO 7 OF 16

...\AS-BUILT\drawings\LA28607.DGN 04/02/02 02:57:33 PM

"AS-BUILT"

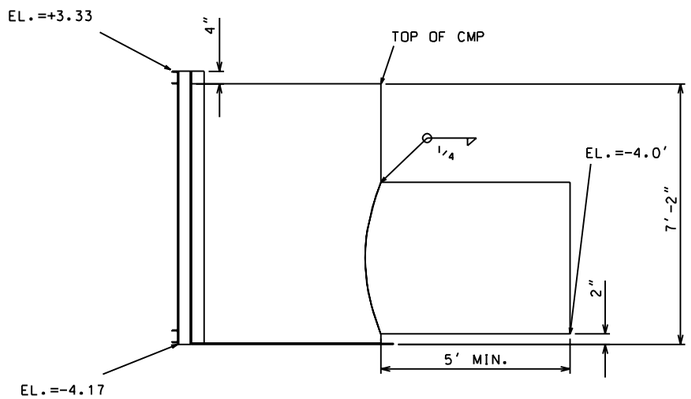

SIDE VIEW
HALF-ROUND STRUCTURE

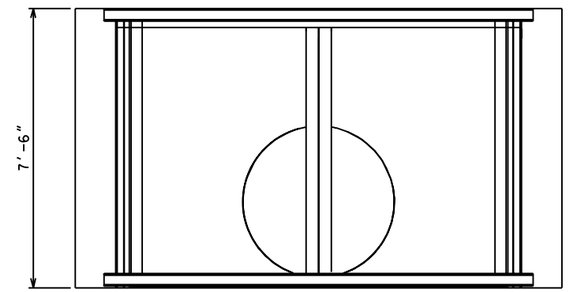

FRONT VIEW
HALF-ROUND STRUCTURE

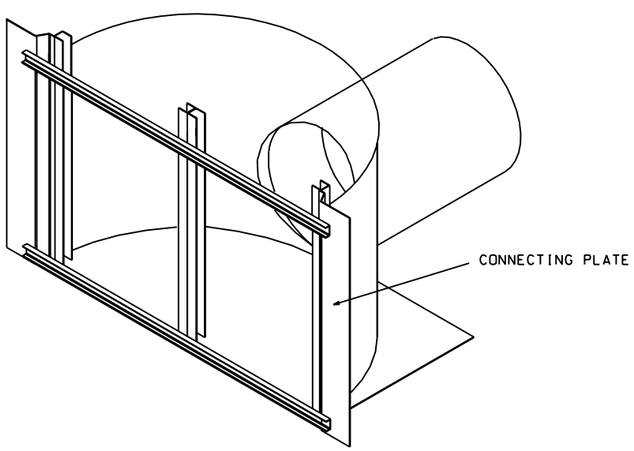

ISOMETRIC VIEW
HALF-ROUND STRUCTURE

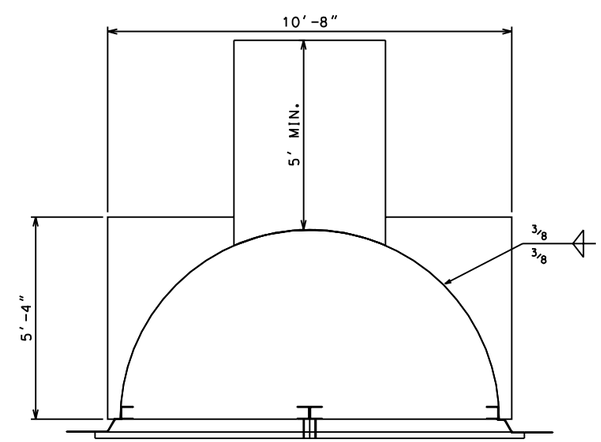

PLAN VIEW
HALF-ROUND STRUCTURE

Designed	J. CHUA	05/99	Approved by E.J.GIERING,III 11/99
Drawn	H.MOORE	05/98	Title STATE CONSERVATION ENGINEER
Traced			
Checked	J.MOORE	05/99	Title

HALF-ROUND CONTROL STRUCTURE
BARATARIA BAY WATERWAY-WEST BANK
PROJECT #PBA-12A
JEFFERSON PARISH •LOUISIANA

U.S. DEPARTMENT OF AGRICULTURE - NATURAL RESOURCES CONSERVATION SERVICE

REVISIONS

DATE	APPR.	TITLE

CAD FILENAME
LA28608.DGN

PROJECT NO.
LA286

SHEET NO _8_ OF 16

...\AS-BUILT\drawings\LA28608.DGN 04/02/02 02:58:29 PM

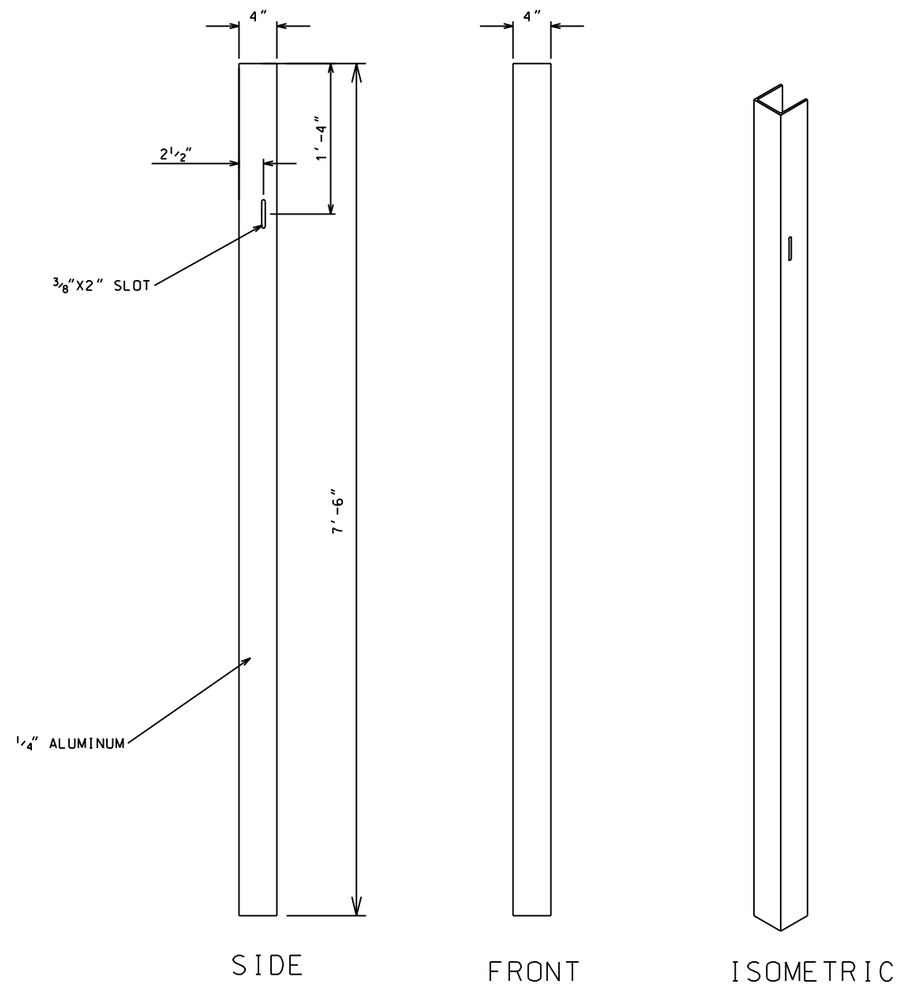

STOPLOG GUIDE
(NOT TO SCALE)

"AS-BUILT"

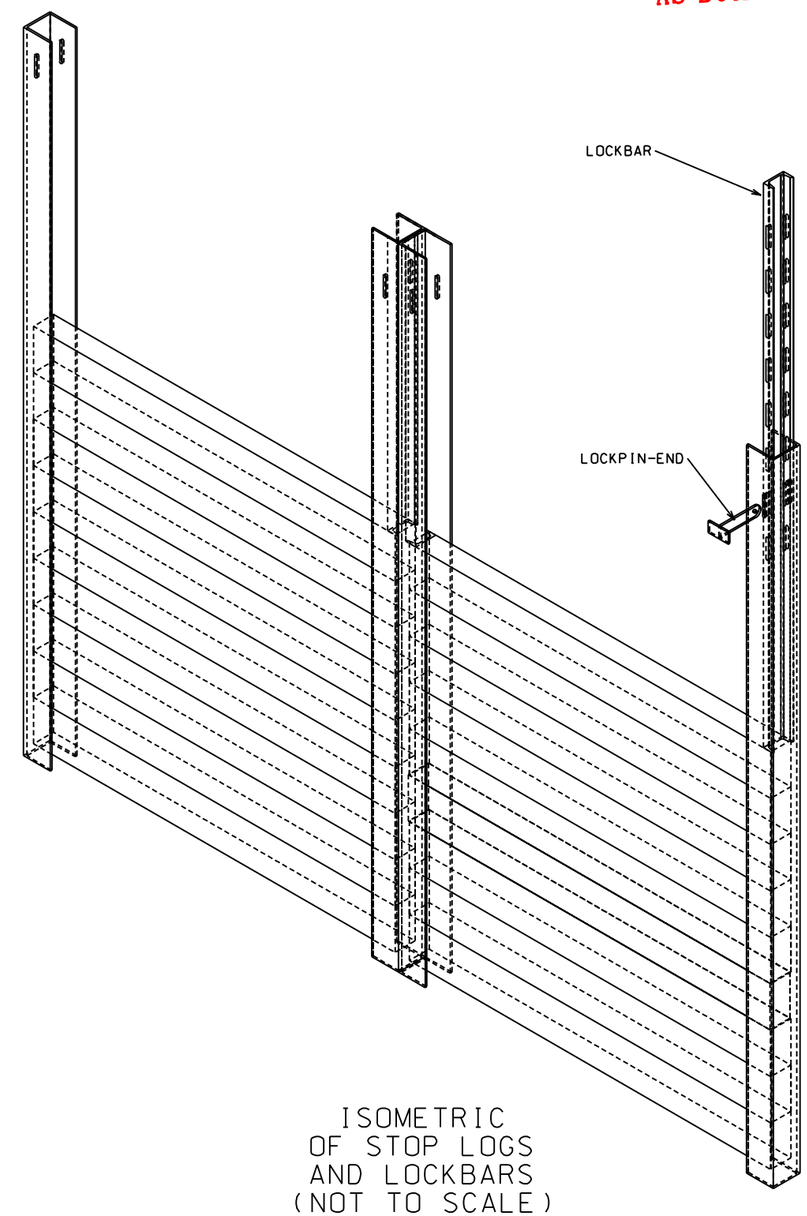

ISOMETRIC
OF STOP LOGS
AND LOCKBARS
(NOT TO SCALE)

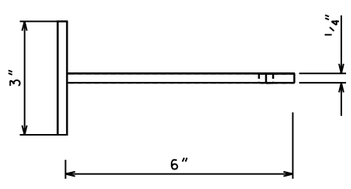

LOCKPIN

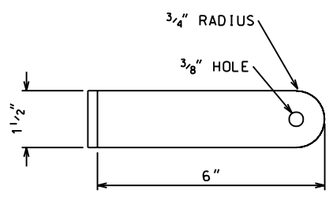

FRONT VIEW
LOCKPIN

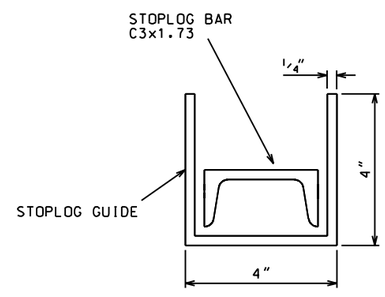

PLAN
STOP LOG GUIDE
& LOCK BAR W/MASTERLOCK

STOP LOG GUIDE, LOCKPIN, AND C3x1.73 LOCKBAR
TO BE OF ALUMINUM.

FOUR C3x1.73 PER RISER TO HAVE EIGHT 3/8" x 3" SLOTS
AT 5 3/4" O.C. BEGINNING 6 3/4" FROM TOP
ON EACH LEG

		Date
	Approved by E.J.GIERING,III	11/99
	Title STATE CONSERVATION ENGINEER	
	Title	

		Date
Designed	J. CHUA	05/99
Drawn	H.MOORE	08/97
Traced		
Checked	J.MOORE	05/99

STOP LOG GUIDE & LOCKBAR
BARATARIA BAY WATERWAY-WEST BANK
PROJECT #PBA-12A
JEFFERSON PARISH, LOUISIANA

U.S. DEPARTMENT OF AGRICULTURE - NATURAL RESOURCES CONSERVATION SERVICE

REVISIONS		
DATE	APPR.	TITLE

CAD FILENAME
LA28609.DGN

PROJECT NO.
LA286

SHEET NO 9 OF 16

...\AS-BUILT\drawings\LA28609.DGN 04/02/02 02:59:01 PM

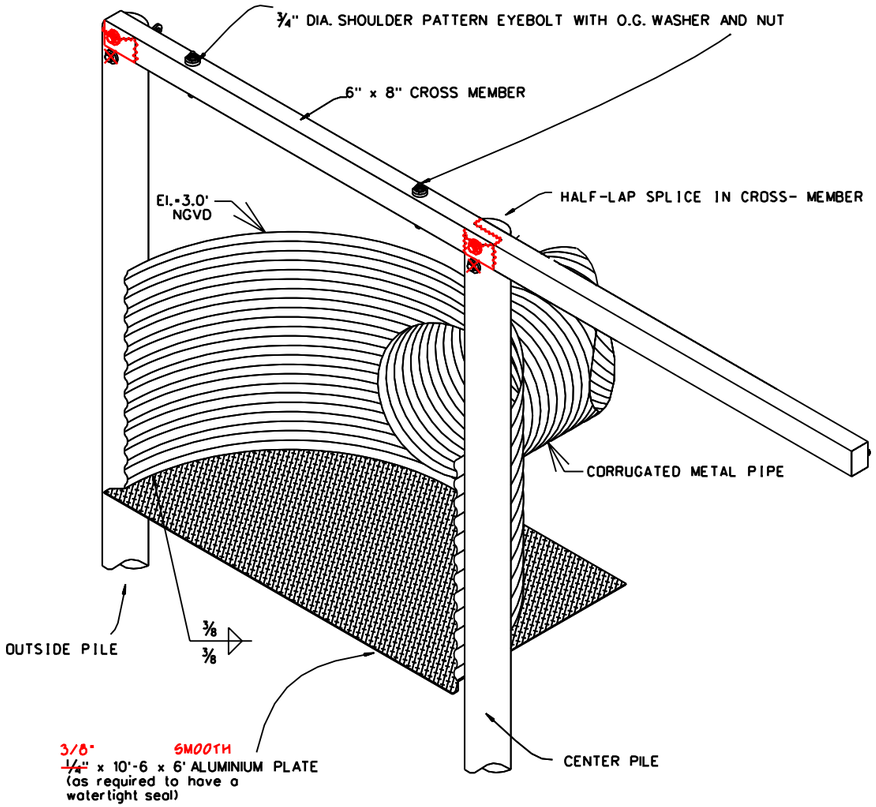

(SHOWN WITHOUT STOPLOG GUIDES AND GRATE FRAME)

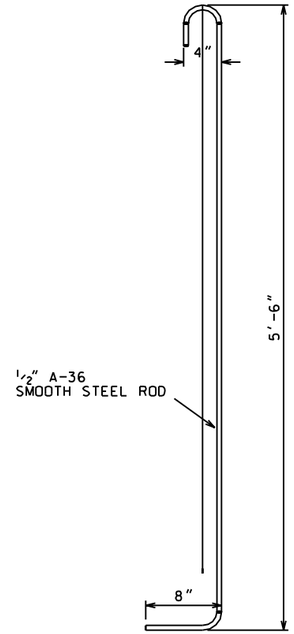

LIFT ROD
(2 REQUIRED)

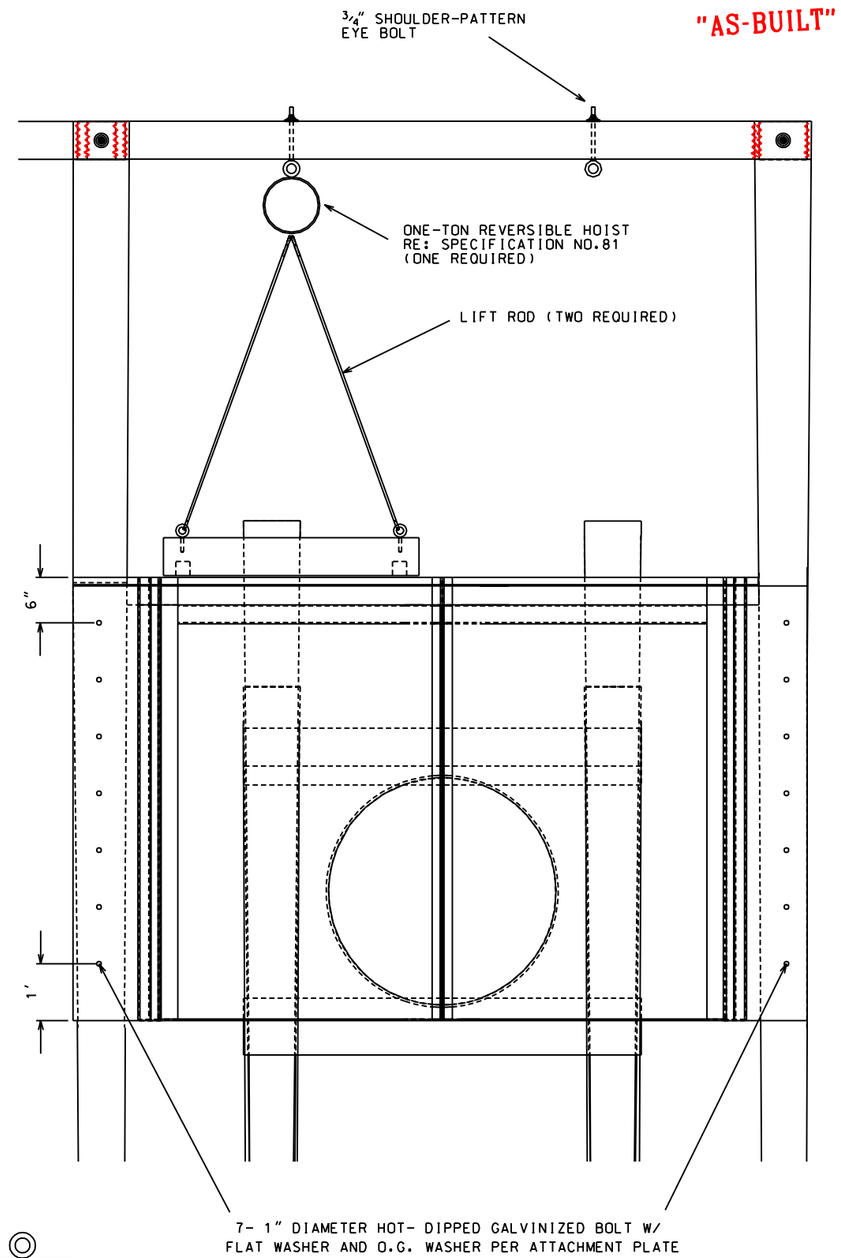

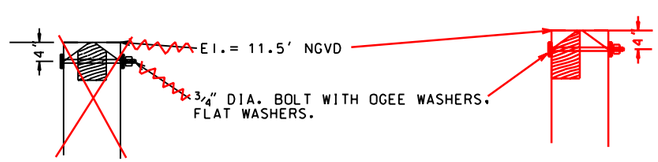

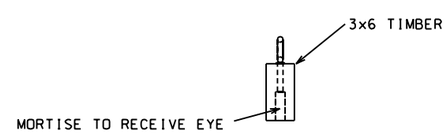

STOP LOG
END

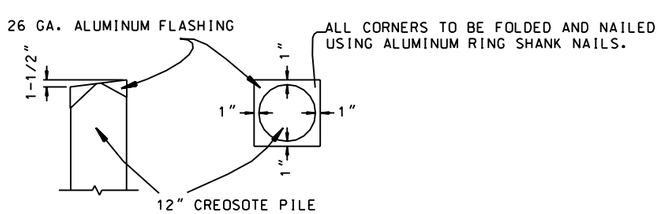

DETAILS OF SHEET METAL FLASHING
(ALL PILES)

(FLASHING TO BE TWO (2) INCHES LARGER
THAN TOP OF PILE)

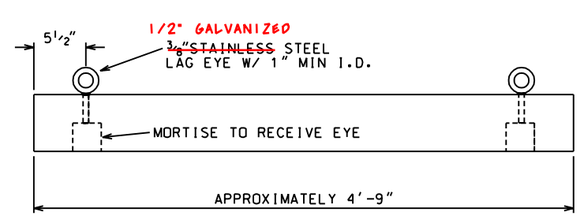

STOP LOG
FRONT

(14 REQUIRED PER RISER)

NOTES:

1. STOP LOGS SHALL BE CUT TO FIT IN FIELD
2. FOR EYE BOLTS WITH NON-CONTINUOUS EYE. GAP SHALL BE CLOSED BY WELDING
3. ATTACHMENT BOLT HOLES TO BE FIELD DRILLED

NOT TO SCALE

		Date
Approved by	E.J.GIERING,III	11/99
Title	STATE CONSERVATION ENGINEER	

		Date
Designed	J. CHUA	05/99
Drawn	H.MOORE	08/97
Traced		
Checked	J.MOORE	05/99

STOP LOG HOIST
BARATARIA BAY WATERWAY-WEST BANK
PROJECT #PBA-12A
JEFFERSON PARISH,LOUISIANA

U.S. DEPARTMENT OF AGRICULTURE - NATURAL RESOURCES CONSERVATION SERVICE

REVISIONS

DATE	APPR.	TITLE

CAD FILENAME
LA28610.DGN

PROJECT NO.
LA286

SHEET NO 10 OF 16

...\AS-BUILT\drawings\LA28610.DGN 04/02/02 02:59:41 PM

"AS-BUILT"

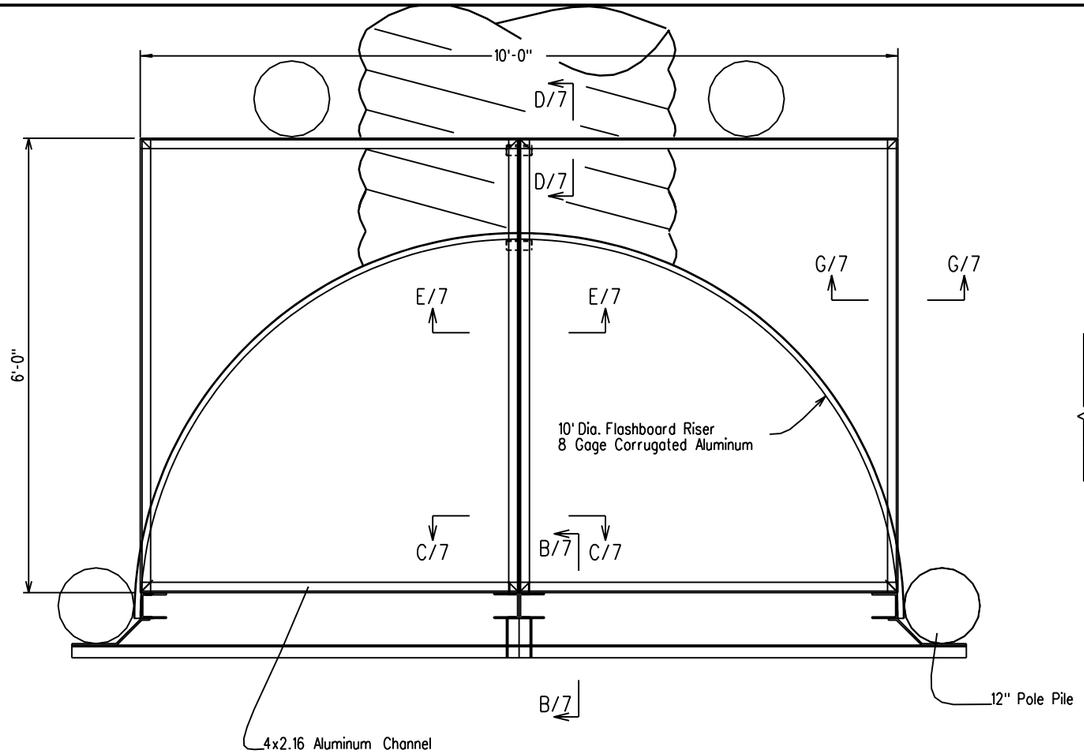

PLAN - WALKWAY PLATFORM

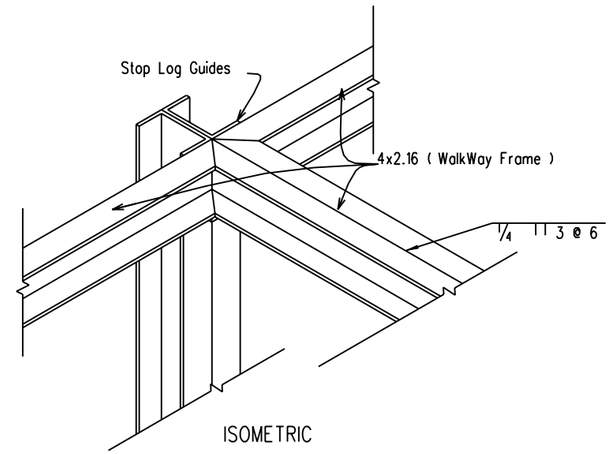

ISOMETRIC

(Not To Scale)

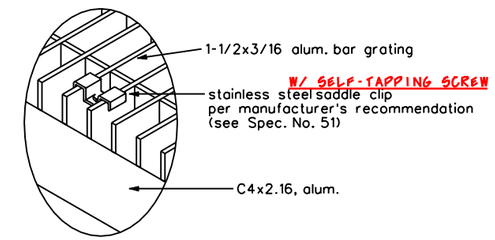

TYPICAL
FASTENING METHOD

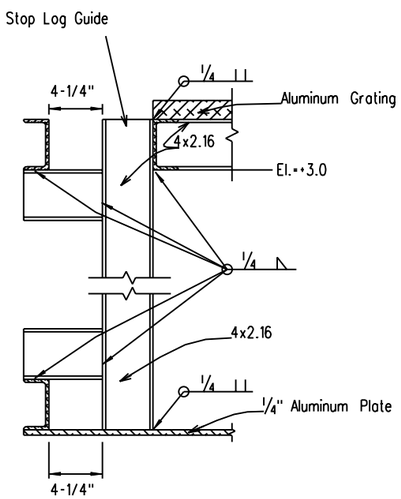

SECTION " B-B/7 "

(Not To Scale)

All Aluminum Channels Shall
Be 4x2 x 1/4 (6061-T6).
(With 4" Slot)
And Are Designated On This
Sheet As 4x2.16

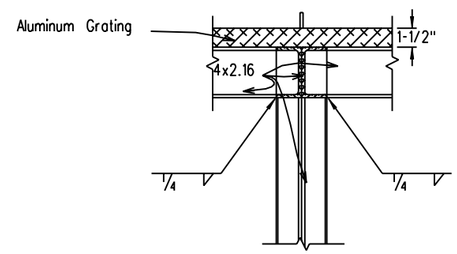

SECTION " C-C/7 "

(Not To Scale)

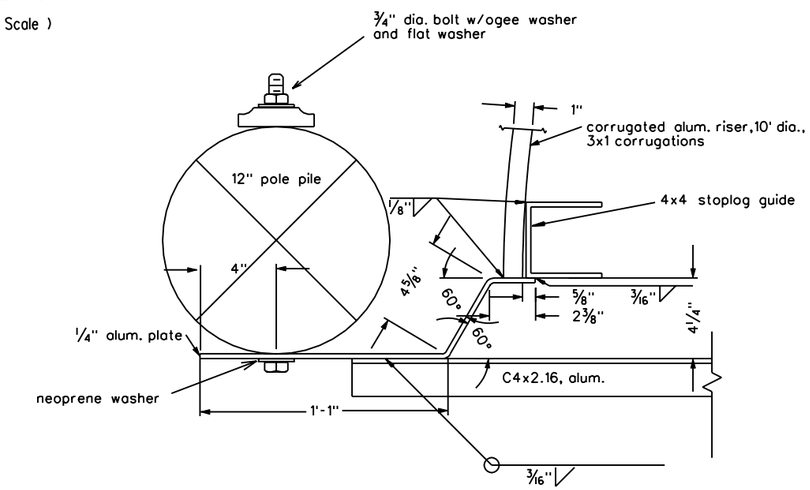

PILE, PLATE & RISER CONNECTION DETAIL

NOTE:
Cross Member And 1/4" Aluminum
Plate Not Shown For Clarity

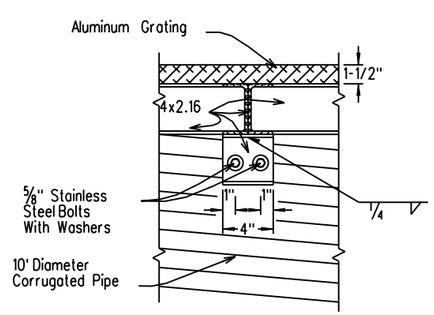

SECTION " E-E/7 "

(Not To Scale)

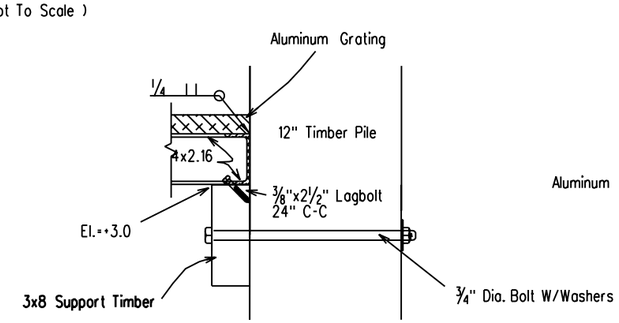

SECTION " D-D/7 "

(Not To Scale)

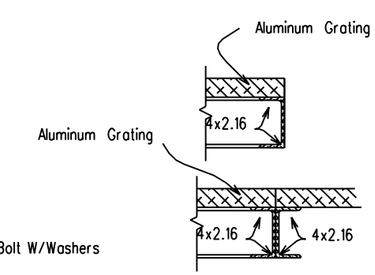

SECTION " G-G/7 "
INSIDE TO INSIDE

(Not To Scale)

SECTION " G-G/7 "
OUTSIDE

(Not To Scale)

Designed	J. CHUA	05/99	Date
Drawn	D.J. WILMORE	05/99	Approved by E.J. GIERING III 11/99
Traced			Title STATE CONSERVATION ENGINEER
Checked	J. MOORE	05/99	Title

RISER PLATFORM DETAILS
BARATARIA BAY WATERWAY-WEST BANK
PROJECT #PBA-12A
JEFFERSON PARISH, LOUISIANA

U.S. DEPARTMENT OF AGRICULTURE - NATURAL RESOURCES CONSERVATION SERVICE

REVISIONS		
DATE	APPR.	TITLE

CAD FILENAME
LA28611.DGN

PROJECT NO.
LA286

SHEET NO 11 OF 16

...\AS-BUILT\drawings\LA28611.DGN 04/02/02 03:03:46 PM

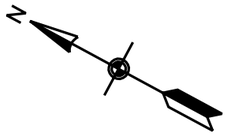

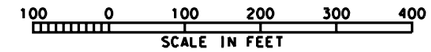

"AS-BUILT"

ROCK DIKE LOCATIONS

STATION	HORIZ.COORD.*	APPROX. DIST. FROM R-O-W CL	HORIZ.COORD.*	
STA.1338+17 PI-1	N403403.5644 ~~N403486.5843~~ ~~E3680621.1483~~ E3680515.4663	432'	PI-1A	N403490.9462 E3680622.7432
STA.1338+99 PI-2	N403614.2142 ~~N403614.40~~ ~~E3680691.98~~ E3680669.7499	310'	PI-3A	N405153.6573 E3679947.4127
STA.1356+06 PI-3	N405090.3592 ~~N405156.0060~~ ~~E3679952.5790~~ E3679982.0110	254'		

*NOTE: NAD83 DATUM

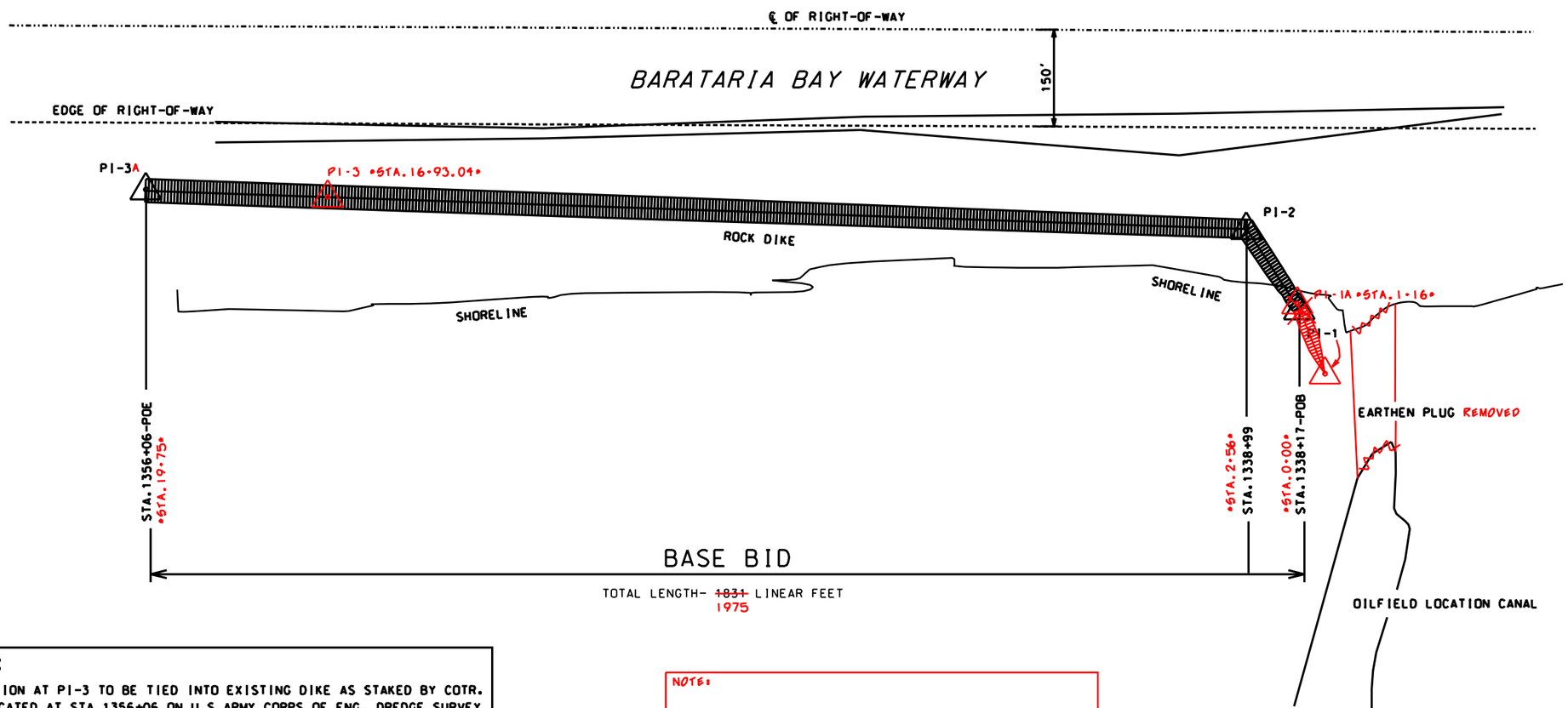

NOTE:

CONSTRUCTION AT PI-3 TO BE TIED INTO EXISTING DIKE AS STAKED BY COTR.
TIE-IN LOCATED AT STA.1356+06 ON U.S.ARMY CORPS OF ENG. DREDGE SURVEY
CONSTRUCTION AT PI-1 TO BE TIED INTO EXISTING BANK AS STAKED BY COTR.

NOTE:

STATIONING SHOWN IN RED CORRESPONDS TO CONSTRUCTION STATIONING AND WITH THE STATIONS SHOWN ON THE SUPPLEMENTAL PROFILE AND CROSS SECTION SHEETS *SHEETS 16A1 THROUGH 16A6 OF 16*

		Date
Approved by	E.J. GIERING III	11/99
Title	STATE CONSERVATION ENGINEER	
Title		

		Date
Designed	J. CHUA	05/99
Drawn	D.J. WILMORE	05/99
Traced		
Checked	J. MOORE	05/99

PLAN-DIKE, STA.1338+17-STA.1356+06
BARATARIA BAY WATERWAY-WEST BANK
PROJECT #PBA-12A
JEFFERSON PARISH, LOUISIANA

U.S. DEPARTMENT OF AGRICULTURE - NATURAL RESOURCES CONSERVATION SERVICE

REVISIONS		
DATE	APPR.	TITLE

CAD FILENAME
LA28612.DGN

PROJECT NO.
LA286

SHEET NO 12 OF 16

...\AS-BUILT\drawings\LA28612.DGN 04/02/02 03:04:32 PM

ROCK DIKE LOCATIONS

STATION	HORIZ. COORD.*	APPROX. DIST. FROM R-O-W CL
STA.1423+96 PI-5	N411144.841 ~~N411144.82~~ ~~E3676763.72~~ E3676762.6985	317'
STA.1422+25 PI-4B	N410997.2317 ~~N410966.91~~ ~~E3676820.04~~ E3676796.9655	350'
STA.1418+33 PI-4A	N410668.3353 ~~N410631.12~~ ~~E3677054.97~~ E3677027.8408	295'
STA.1414+33 PI-4	N410325.9790 ~~N410334.31~~ ~~E3677262.20~~ E3677264.0051	249'

200 0 200 400 600 800
SCALE IN FEET

"AS-BUILT"

NOTE:

STATIONING SHOWN IN RED CORRESPONDS TO CONSTRUCTION STATIONING AND WITH THE STATIONS SHOWN ON THE SUPPLEMENTAL PROFILE AND CROSS SECTION SHEETS *SHEETS 16A1 THROUGH 16A6 OF 16*

NOTE:
DIKE WILL BE TIED INTO EXISTING ROCK @ PI-5,PI-4 & PI-4B AS STAKED IN THE FIELD BY COTR

* NOTE: NAD83 DATUM

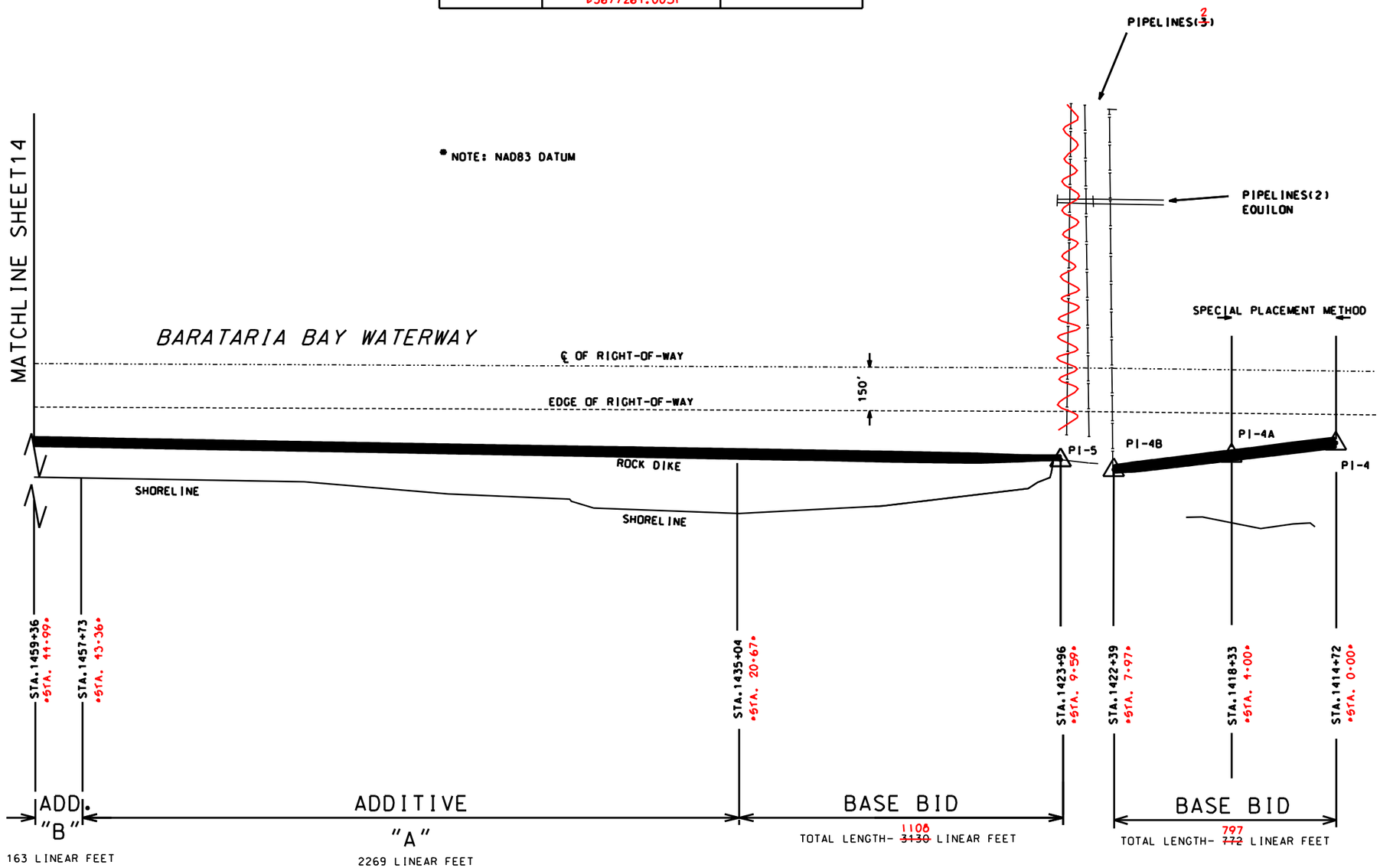

Approved by E.J.GIERING III Date 11/99
Title STATE CONSERVATION ENGINEER
Title

Designed J. CHUA 05/99 Date
Drawn D.J. WILMORE 05/99
Traced
Checked J. MOORE 05/99

PLAN-DIKE.STA.1414+33-STA.1459+36
BARATARIA WATERWAY-WEST BANK
PROJECT #PBA-12A
JEFFERSON PARISH, LOUISIANA

U.S. DEPARTMENT OF AGRICULTURE - NATURAL RESOURCES CONSERVATION SERVICE

REVISIONS
DATE APPR. TITLE

CAD FILENAME LA28613.DGN
PROJECT NO. LA286
SHEET NO 13 OF 16

...\AS-BUILT\drawings\LA28613.DGN 04/02/02 03:05:02 PM

NOTE:

STATIONING SHOWN IN RED CORRESPONDS TO CONSTRUCTION STATIONING AND WITH THE STATIONS SHOWN ON THE SUPPLEMENTAL PROFILE AND CROSS SECTION SHEETS
SHEETS 16A1 THROUGH 16A6 OF 16

ROCK DIKE LOCATIONS

STATION	HORIZ. COORD.*	APPROX. DIST. FROM R-O-W CL
STA.1492+47 PI-6	N417201.46 ~~N417201.71~~ ~~E3673642.86~~ E3673646.42	207'
STA.1492+67 PI-7	N417197.80 ~~N417198.36~~ ~~E3673594.30~~ E3673596.31	251'
STA.1494+02 PI-8	N417283.34 ~~N417332.02~~ ~~E3673553.35~~ E3673565.89	223'
STA.1494+47 PI-9	N417337.0113 ~~N417380.11~~ ~~E3673550.73~~ E3673554.36	202'
STA.1495+63 PI-10	N417442.16 ~~N417470.65~~ ~~E3673504.39~~ E3673515.20	200'

* NOTE: NAD83 DATUM

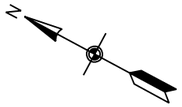

200 0 200 400 600 800
SCALE IN FEET

"AS-BUILT"

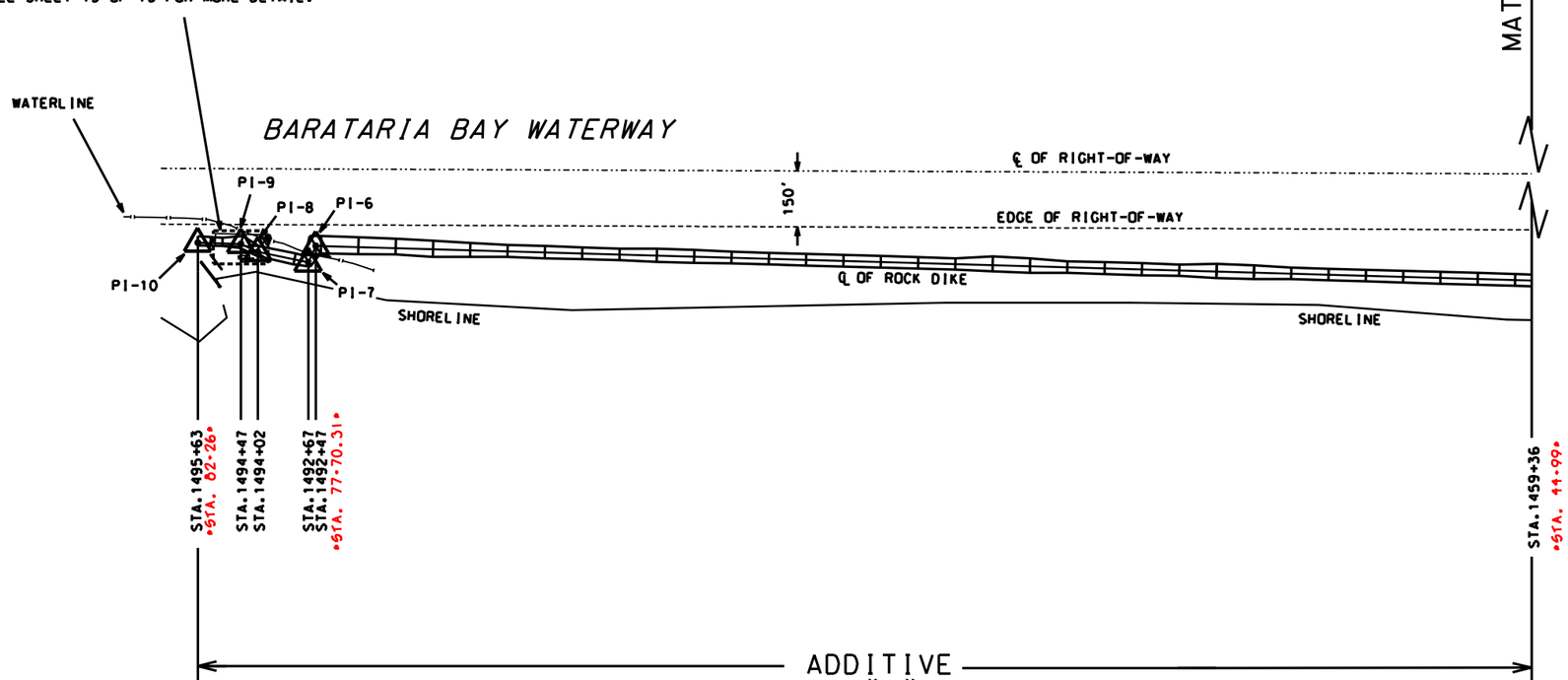

MATCHLINE SHEET13

		Date
Designed	J. CHUA	05/99
Drawn	D.J. WILMORE	05/99
Traced		
Checked	J. MOORE	05/99

Approved by E.J. GIERING III 11/99
Title STATE CONSERVATION ENGINEER
Title

PLAN-DIKE, STA.1459+36-STA.1495+63
BARATARIA BAY WATERWAY-WEST BANK
PROJECT #PBA-12A
JEFFERSON PARISH, LOUISIANA

U.S. DEPARTMENT OF AGRICULTURE - NATURAL RESOURCES CONSERVATION SERVICE

REVISIONS			
DATE	APPR.	TITLE	
02/28/00	E.J.G.	S.CON.ENG.	

CAD FILENAME
LA28614.DGN

PROJECT NO.
LA286

SHEET NO 14 OF 16

...\drawings\LA28614mod.dgn 04/02/02 03:05:39 PM

STATION	HORIZ. COORD.
PI-9	N417337.01 E3673554.36
PI-10	N417442.16 E3673515.20
PI-11	N417505.2532 E3673272.4216
PI-12	N417579.8231 E3673272.4216
PI-10A	N417361.49 E3673480.19

ROCK DIKE LOCATIONS

STATION	HORIZ. COORD.*	APPROX. DIST. FROM R-O-W CL
STA. 1495+71 PI-7	N417492.0178 E3673412.3510	302'
STA. 1497+13 PI-8	N417579.9723 E3673274.1905	382'

*NOTE: NAD83 DATUM

40 0 40 80 120 160
SCALE IN FEET

"AS-BUILT"

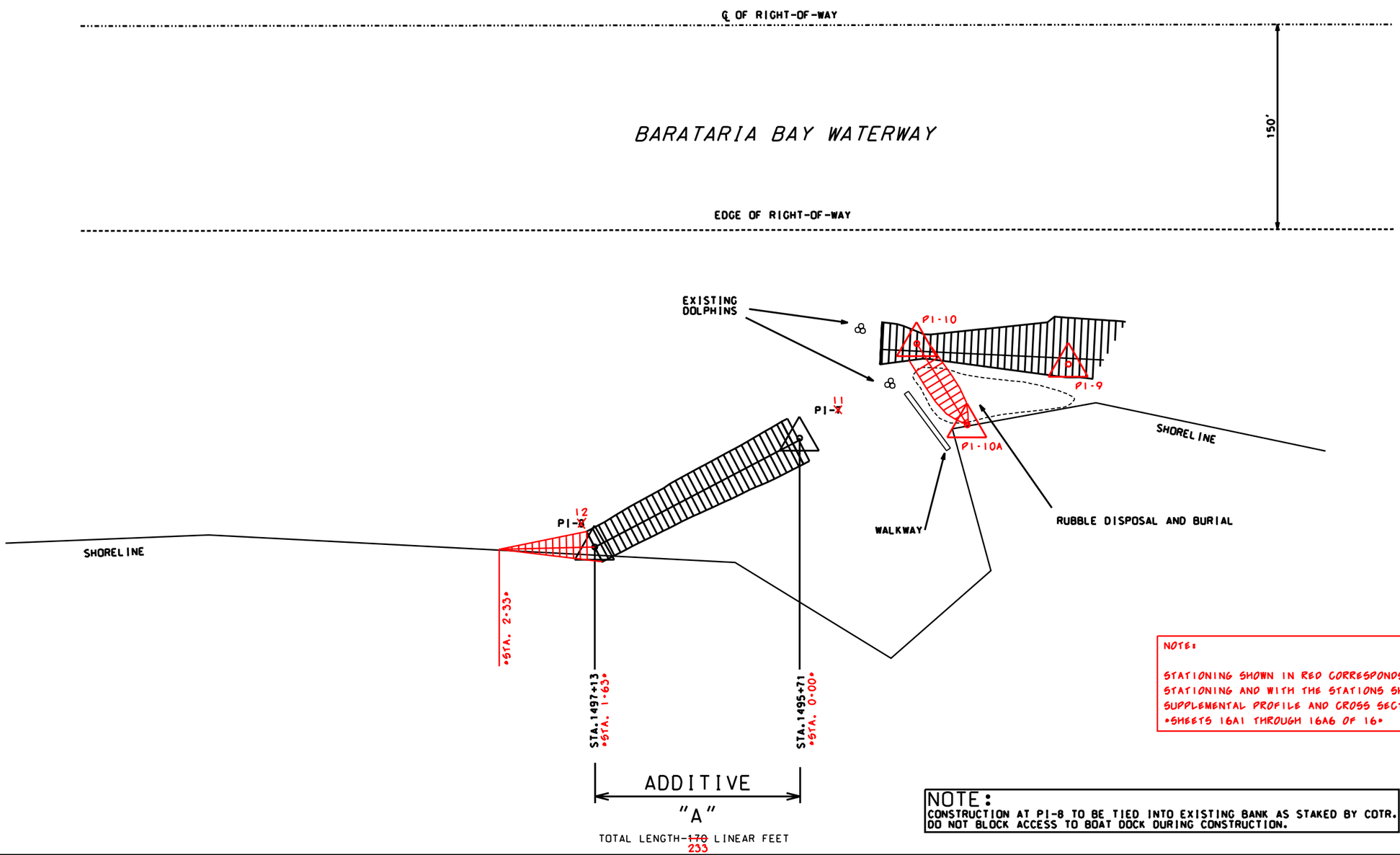

NOTE:

STATIONING SHOWN IN RED CORRESPONDS TO CONSTRUCTION STATIONING AND WITH THE STATIONS SHOWN ON THE SUPPLEMENTAL PROFILE AND CROSS SECTION SHEETS *SHEETS 16A1 THROUGH 16A6 OF 16*

NOTE:
CONSTRUCTION AT PI-8 TO BE TIED INTO EXISTING BANK AS STAKED BY COTR.
DO NOT BLOCK ACCESS TO BOAT DOCK DURING CONSTRUCTION.

Approved by E.J.GIERING III — Date 11/99
Title STATE CONSERVATION ENGINEER

Designed J. CHUA — Date 05/99
Drawn D.J. WILMORE — Date 05/99
Traced
Checked J. MOORE — Date 05/99

PLAN-DIKE.STA.1495+71-STA.1497+13
BARATARIA BAY WATERWAY-WEST BANK
PROJECT #PBA-12A
JEFFERSON PARISH, LOUISIANA

U.S. DEPARTMENT OF AGRICULTURE - NATURAL RESOURCES CONSERVATION SERVICE

REVISIONS		
DATE	APPR.	TITLE

CAD FILENAME
LA28615.DGN

PROJECT NO.
LA286

SHEET NO 15 OF 16

...\AS-BUILT\drawings\LA28615.DGN 04/02/02 03:06:07 PM

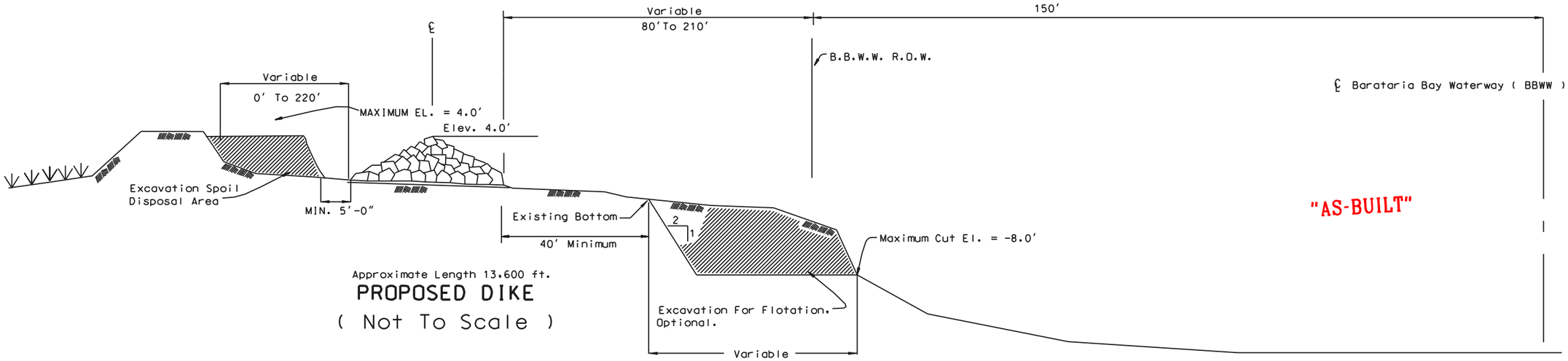

Approximate Length 13,600 ft.

PROPOSED DIKE

(Not To Scale)

MODIFICATION #8

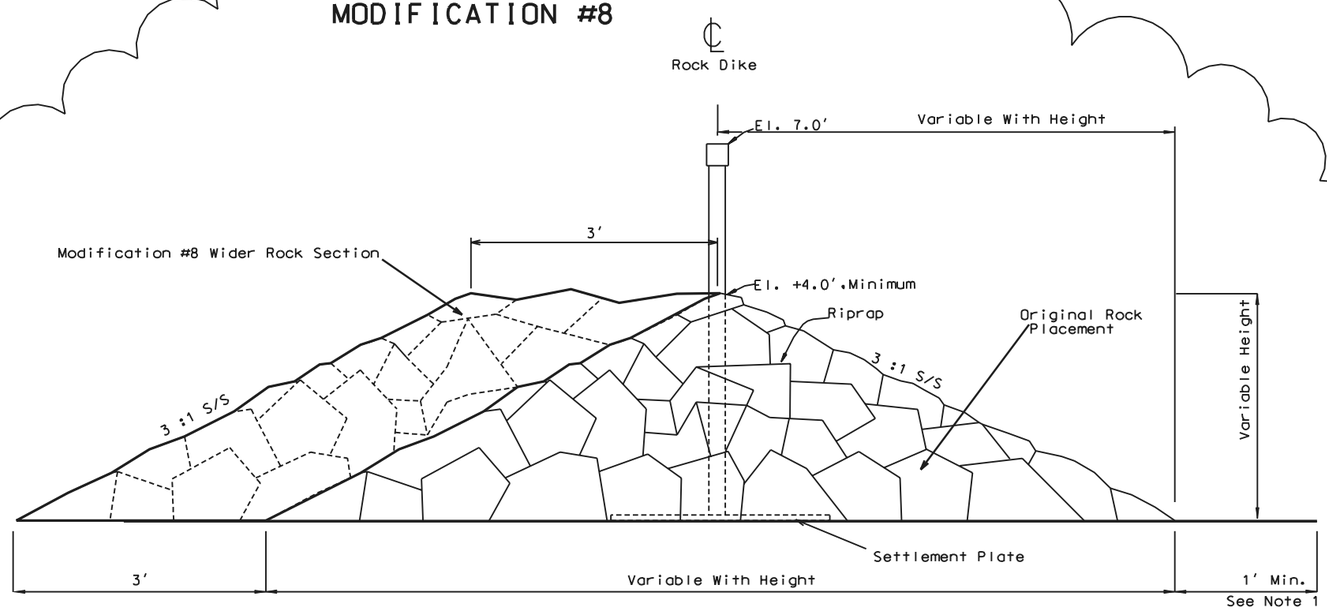

TYPICAL SECTION - ROCK DIKE

(NOT TO SCALE)

NOTES:

1. Place A Sufficient Amount Of Rock On Excess Geotextile To Prevent Flapping Action In Water
2. Wider Rock Section For Modification #8 Shall Be Placed On The Land Side Of The Original Contract Rock Placement As Shown From Sta. 1414+33 To Sta. 1422+25 And From Sta. 1423+96 Northward Until All Delivered Riprap As Of 8/17/2000 Has Been Placed (Estimated 2000 Tons).

MOD #8 SECTION PLACED AT STA. 1418+33 TO STA. 1420+33 *APPROX. 200 LF* AND PLACED 607 TONS OF ROCK

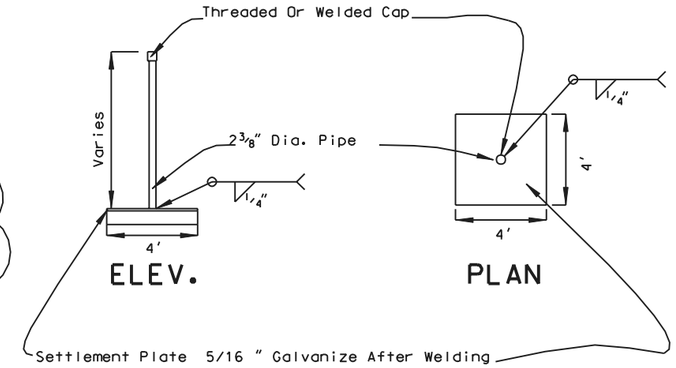

SETTLEMENT PLATE DETAILS

(Not To Scale)

Designed J. CHUA	05/99	Date
Drawn P. COLE. D.P.. R.K.	05/99	Approved by C.J. GIERING, III 11/99
Traced		Title STATE CONSERVATION ENGINEER
Checked J. MOORE	05/99	Title ALEXANDRIA, LOUISIANA

DETAILS - ROCK DIKE
BARATARIA BAY WATERWAY-WEST BANK
PROJECT #PBA-12A
JEFFERSON PARISH, LOUISIANA

U.S. DEPARTMENT OF AGRICULTURE - NATURAL RESOURCES CONSERVATION SERVICE

REVISIONS			
NO.	DATE	APPR.	TITLE
MOD #8	8/17/00		S.C.E.

CAD FILENAME
LA28616M8.DGN

PROJECT NO.
LA286

SHEET NO 16 OF 16

...\drawings\La28616M8.dgn 04/02/02 03:06:38 PM

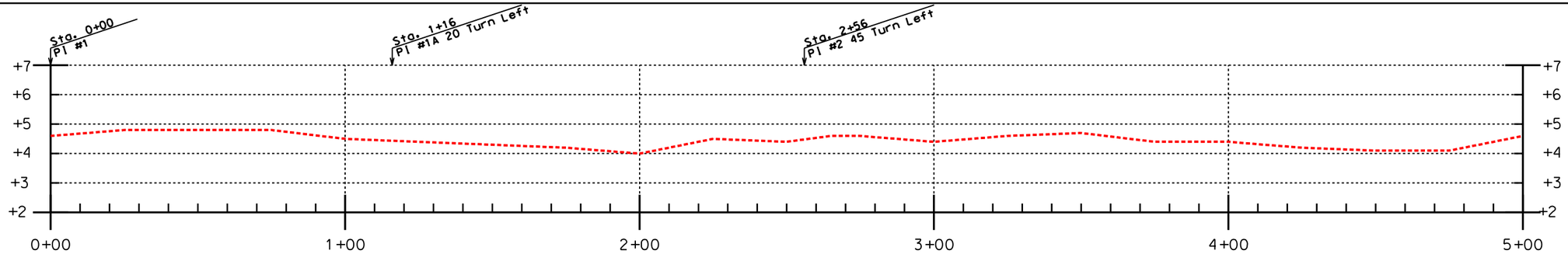

SOUTH END - PROFILE ON ℄
STA. 0+00 - 5+00

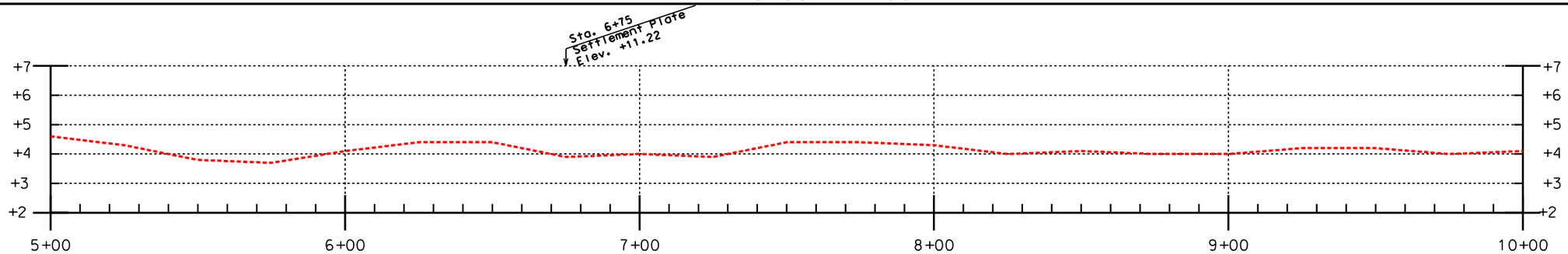

SOUTH END - PROFILE ON ℄
STA. 5+00 - 10+00

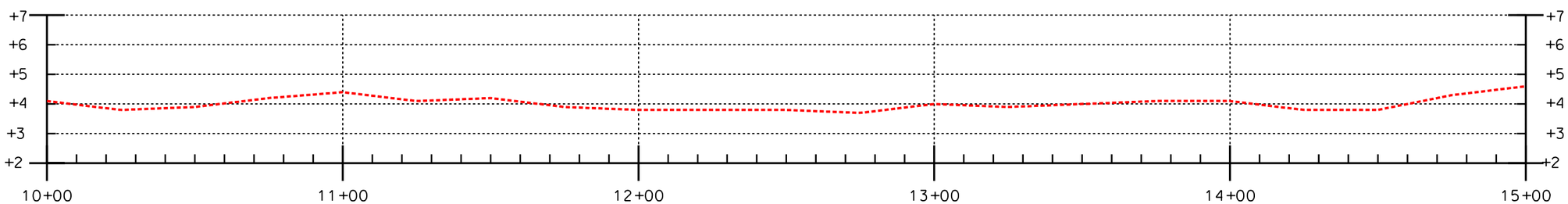

SOUTH END - PROFILE ON ℄
STA. 10+00 - 15+00

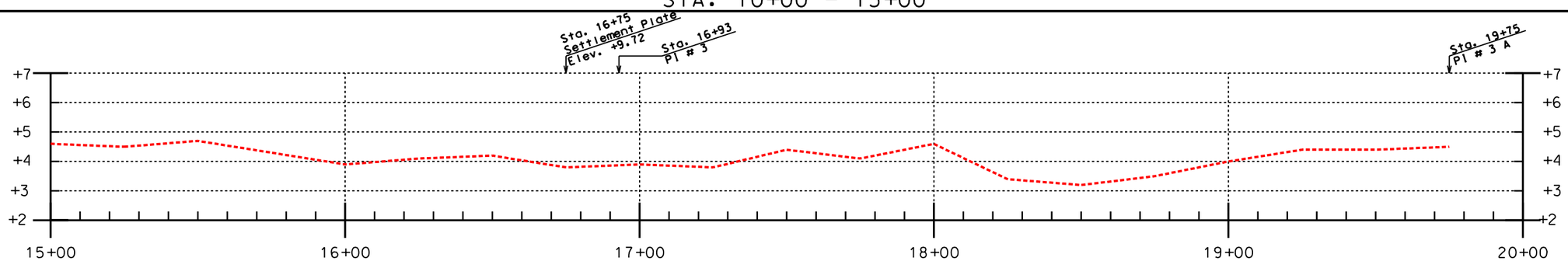

SOUTH END - PROFILE ON ℄
STA. 15+00 - 19+75

"AS-BUILT"

		Date
Approved by	E.J. GIERING III	03/02
Title	STATE CONSERVATION ENGINEER	
Title		

		Date
Designed	J. Chua	05/99
Drawn	A. J. Gremillion	03/02
Traced		
Checked	B. Sticker	03/02

SOUTH END PROFILE - AS-BUILT
BARATARIA BAY WATERWAY-WEST BANK
PROJECT # PBA-12A
JEFFERSON PARISH, LOUISIANA

U.S. DEPARTMENT OF AGRICULTURE - NATURAL RESOURCES CONSERVATION SERVICE

REVISIONS		
DATE	APPR.	TITLE

CAD FILE NO.
LA286016A1

DRAWING NO.
LA-286

SHEET NO 16A1 OF 16

...\drawings\LA286016A1.dgn 04/02/02 03:07:26 PM

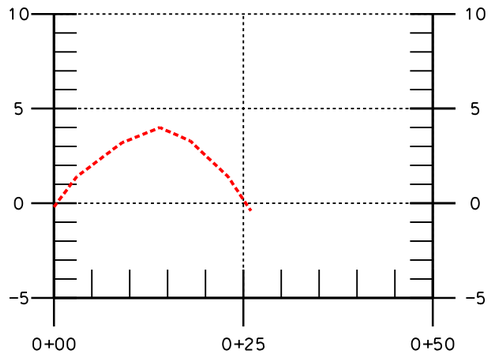

SOUTH END
STA. 2+00

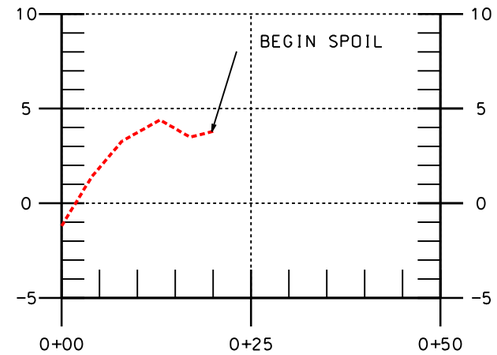

SOUTH END
STA. 4+00

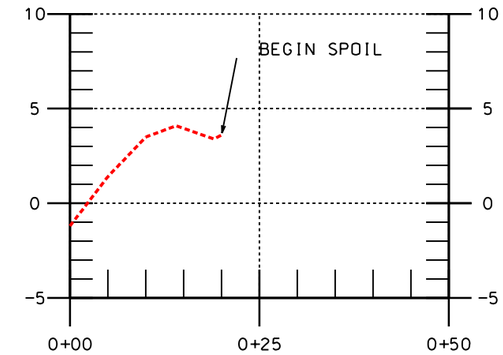

SOUTH END
STA. 6+00

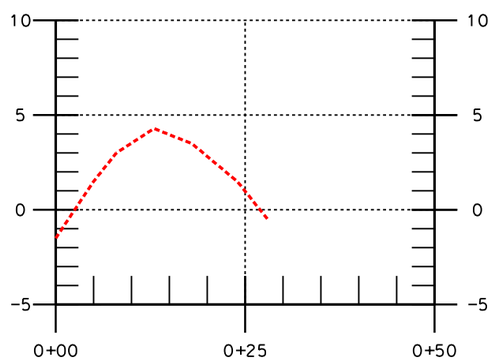

SOUTH END
STA. 8+00

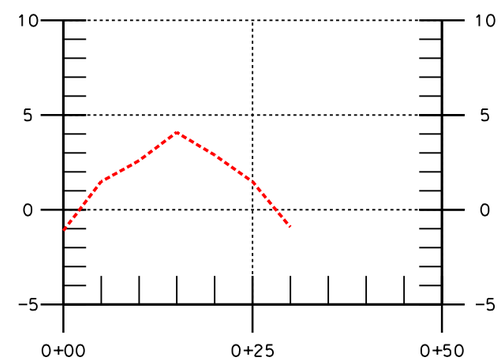

SOUTH END
STA. 10+00

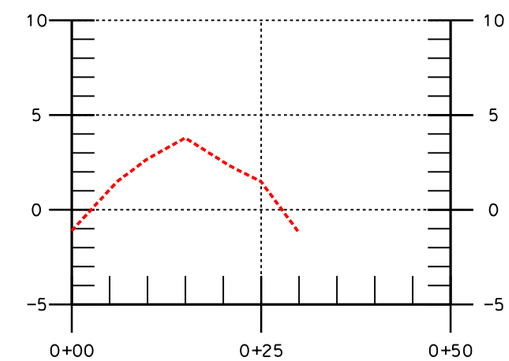

SOUTH END
STA. 12+00

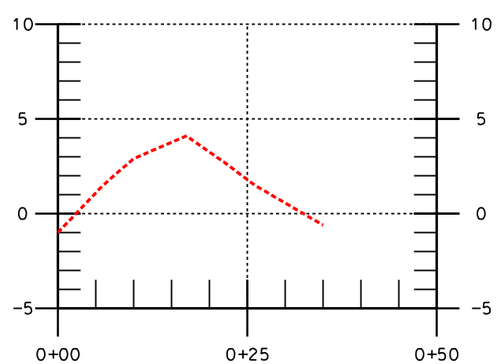

SOUTH END
STA. 14+00

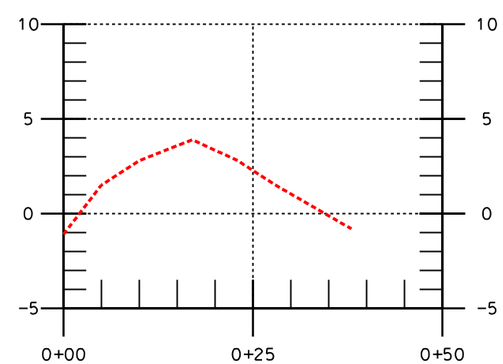

SOUTH END
STA. 16+00

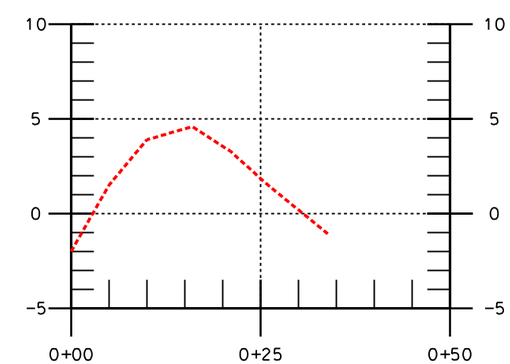

SOUTH END
STA. 18+00

"AS-BUILT"

Designed J. Chua 05/99
Drawn A. J. Gremillion 03/02
Traced
Checked B. Sticker 03/02

Approved by E.J. GIERING III 03/02
Title STATE CONSERVATION ENGINEER
Title

SOUTH END SECTIONS - AS-BUILT
BARATARIA BAY WATERWAY-WEST BANK
PROJECT # PBA-12A
JEFFERSON PARISH, LOUISIANA

U.S. DEPARTMENT OF AGRICULTURE - NATURAL RESOURCES CONSERVATION SERVICE

REVISIONS
DATE | APPR. | TITLE

CAD FILE NO.
LA286016A2

DRAWING NO.
LA-286

SHEET NO 16A2 OF 16

...\drawings\LA286016A2.dgn 04/02/02 03:08:28 PM

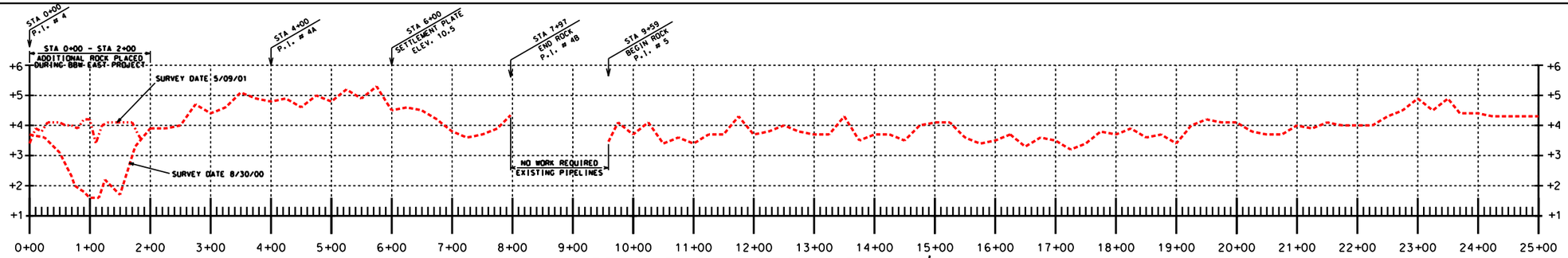

NORTH END - PROFILE ON ℄
STA. 0+00 - 25+00

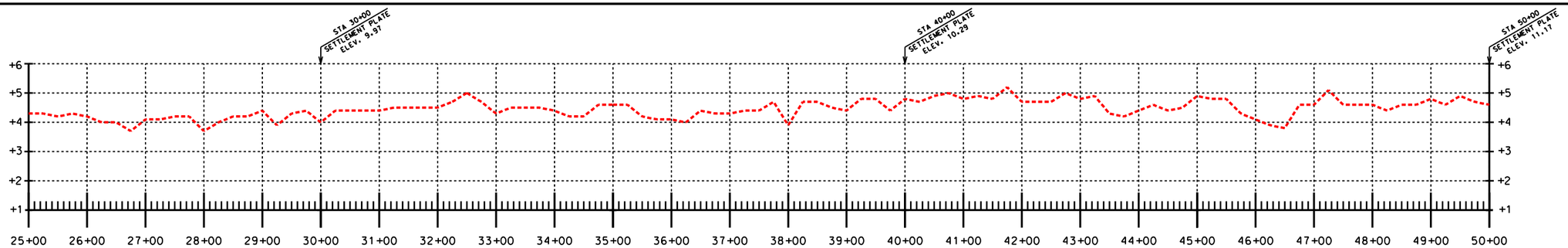

NORTH END - PROFILE ON ℄
STA. 25+00 - 50+00

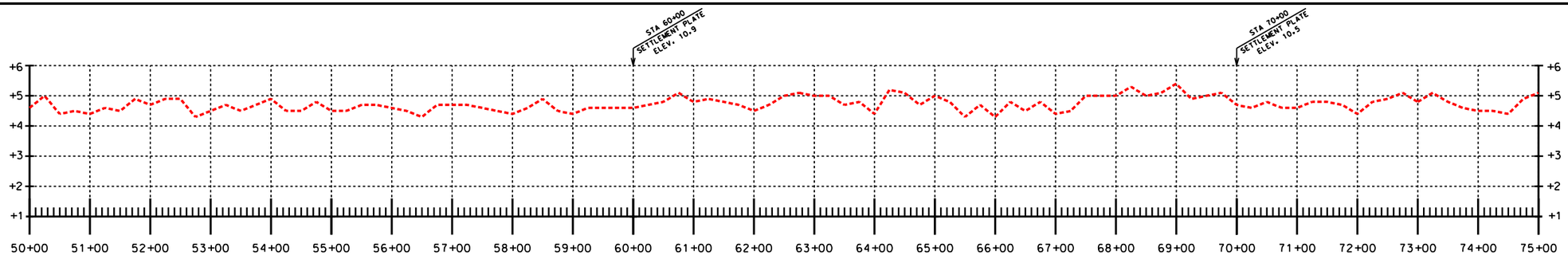

NORTH END - PROFILE ON ℄
STA.50+00 - 75+00

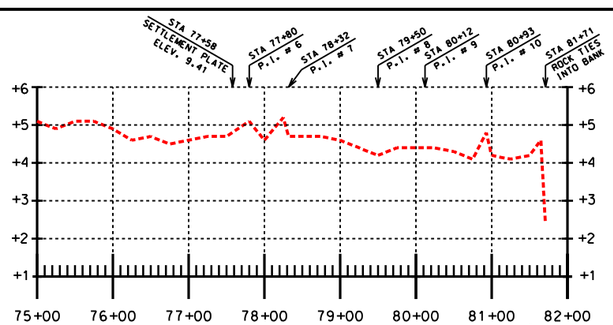

NORTH END - PROFILE ON ℄
STA. 75+00 - 82+00

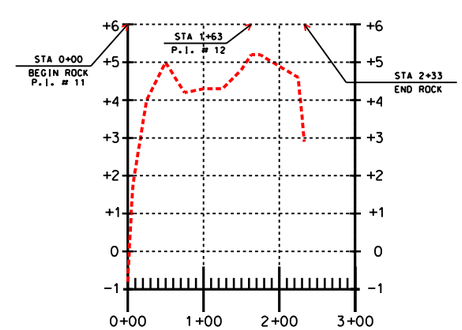

UPPER NORTH END - PROFILE ON ℄
STA. 0+00 - 2+33

"AS-BUILT"

		Date
Designed	J. Chua	05/99
Drawn	A. J. Gremillion	03/02
Traced		
Checked	B. Sticker	03/02

Approved by E.J. GIERING III — Date 03/02
Title STATE CONSERVATION ENGINEER
Title

NORTH END PROFILE - AS-BUILT
BARATARIA BAY WATERWAY-WEST BANK
PROJECT # PBA-12A
JEFFERSON PARISH, LOUISIANA

U.S. DEPARTMENT OF AGRICULTURE - NATURAL RESOURCES CONSERVATION SERVICE

REVISIONS: DATE | APPR. | TITLE

CAD FILE NO. LA286016A3
DRAWING NO. LA-286
SHEET NO 16A3 OF 16

...\drawings\LA286016A3.dgn 04/02/02 03:08:53 PM

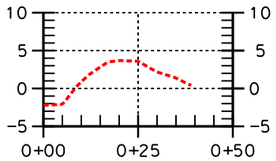

NORTH END
STA. 0+00

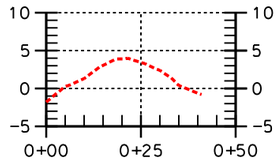

NORTH END
STA. 2+00

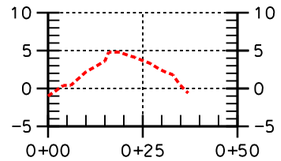

NORTH END
STA.4+00

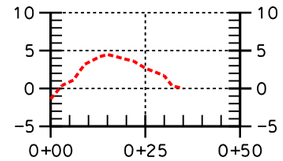

NORTH END
STA. 6+00

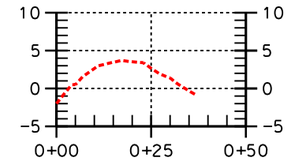

NORTH END
STA. 10+00

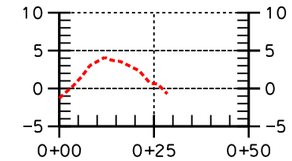

NORTH END
STA. 14+00

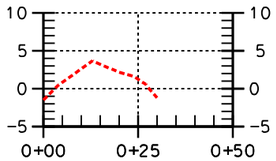

NORTH END
STA. 18+00

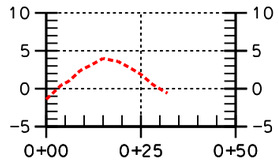

NORTH END
STA. 22+00

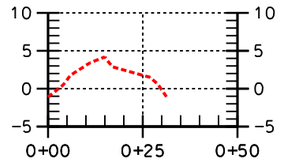

NORTH END
STA. 26+00

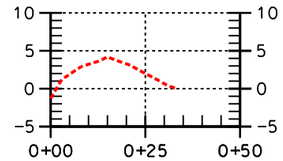

NORTH END
STA. 30+00

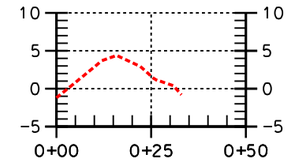

NORTH END
STA. 34+00

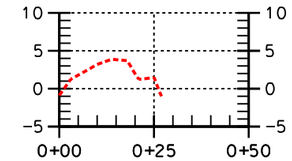

NORTH END
STA. 38+00

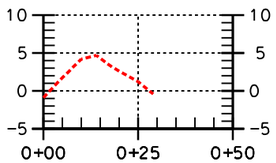

NORTH END
STA. 42+00

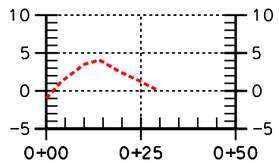

NORTH END
STA. 46+00

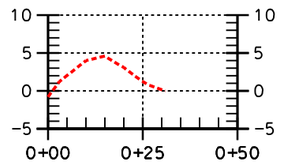

NORTH END
STA. 50+00

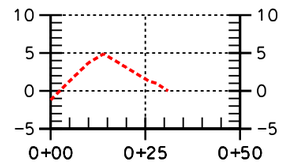

NORTH END
STA. 54+00

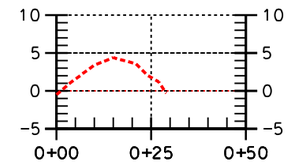

NORTH END
STA. 58+00

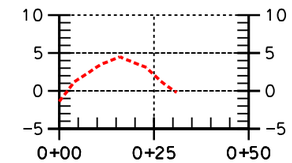

NORTH END
STA. 62+00

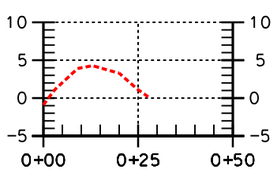

NORTH END
STA. 66+00

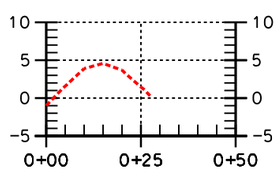

NORTH END
STA. 70+00

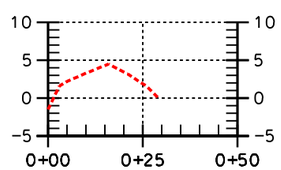

NORTH END
STA.74+00

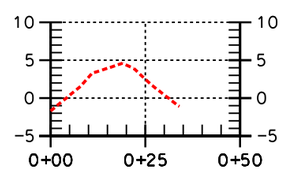

NORTH END
STA. 78+00

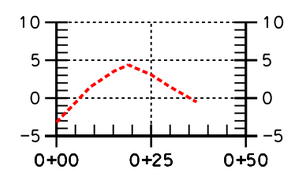

NORTH END
STA. 80+00

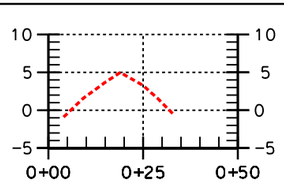

UPPER NORTH END
STA. 0+50

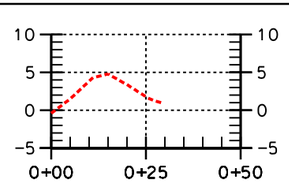

UPPER NORTH END
STA. 1+50

"AS-BUILT"

Approved by E.J. GIERING III Date 03/02
Title STATE CONSERVATION ENGINEER

Designed J. Chua Date 050999/00
Drawn A. J. Gremillion 03/02
Traced
Checked B. Sticker 03/02

NORTH END SECTIONS - AS-BUILT
BARATARIA BAY WATERWAY-WEST BANK
PROJECT # PBA-12A
JEFFERSON PARISH, LOUISIANA

U.S. DEPARTMENT OF AGRICULTURE - NATURAL RESOURCES CONSERVATION SERVICE

REVISIONS		
DATE	APPR.	TITLE

CAD FILE NO.
LA286016A4

DRAWING NO.
LA-286

SHEET NO 16A4 OF 16

...\drawings\LA286016A4.dgn 04/02/02 03:09:24 PM

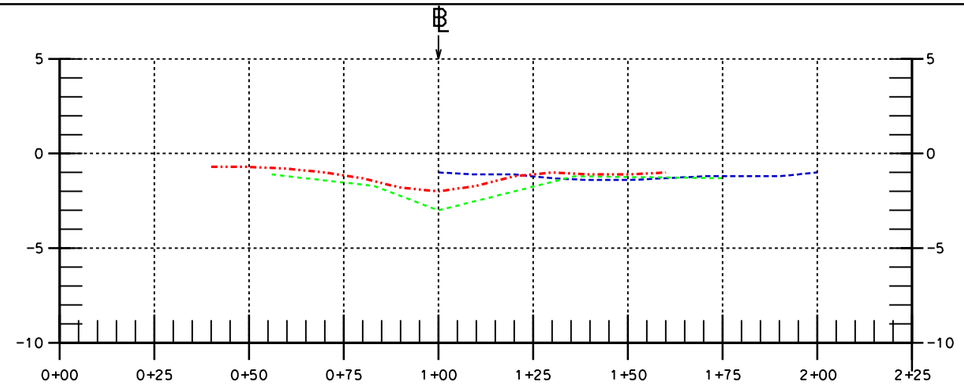

STRUCTURE LOCATION CANAL
STA. 2+00

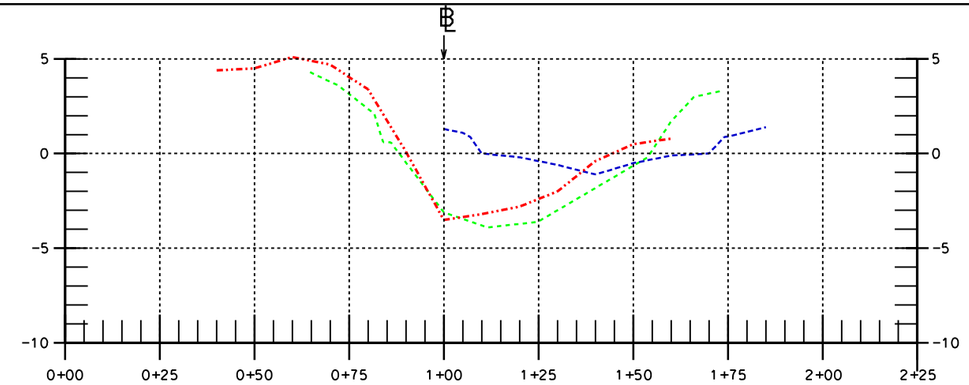

STRUCTURE LOCATION CANAL
STA. 6+00

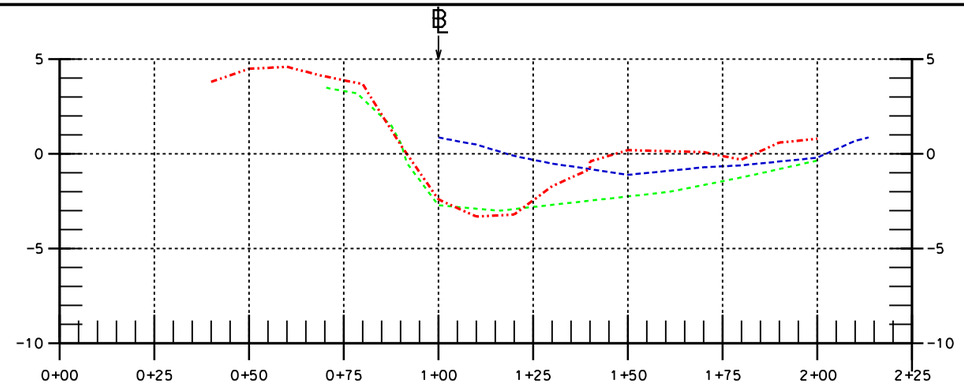

STRUCTURE LOCATION CANAL
STA. 10+00

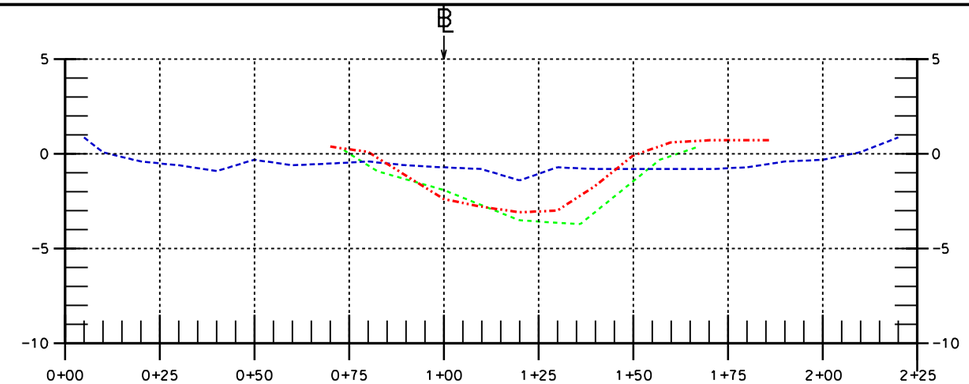

STRUCTURE LOCATION CANAL
STA. 14+00

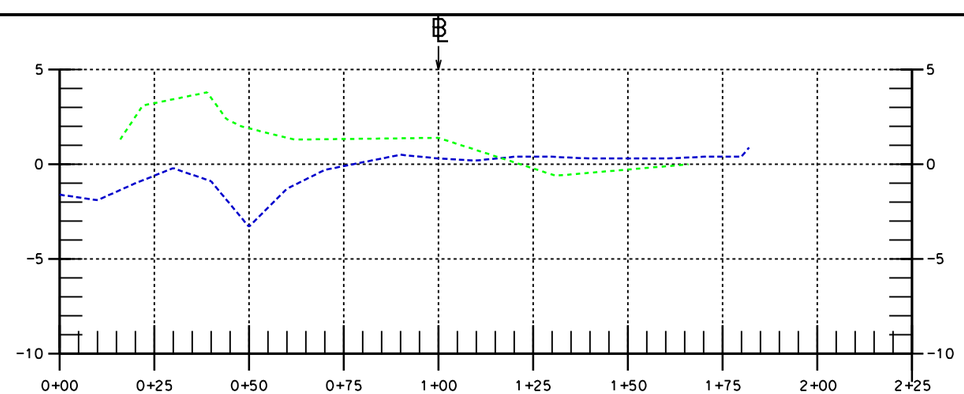

STRUCTURE LOCATION CANAL
STA. 18+00

ORIGINAL CROSS SECTIONS (SURVEY DATE: 6/08/00

CONSTRUCTION CHECK CROSS SECTIONS (SURVEY DATE: 11/15/00

FINAL CHECK CROSS SECTIONS (SURVEY DATE: 9/12/01)

"AS-BUILT"

		Date
Approved by	E.J. GIERING III	03/02
Title	STATE CONSERVATION ENGINEER	
Title		

		Date
Designed	J. Chua	05/99
Drawn	A. J. Gremillion	03/02
Traced		
Checked	B. Sticker	03/02

LOCATION CANAL (OUTLET) – AS-BUILT
BARATARIA BAY WATERWAY-WEST BANK
PROJECT # PBA-12A
JEFFERSON PARISH, LOUISIANA

U.S. DEPARTMENT OF AGRICULTURE – NATURAL RESOURCES CONSERVATION SERVICE

REVISIONS		
DATE	APPR.	TITLE

CAD FILE NO.
LA286016A5

DRAWING NO.
LA-286

SHEET NO 16A5 OF 16

...\drawings\LA286016A5.dgn 04/02/02 03:09:52 PM

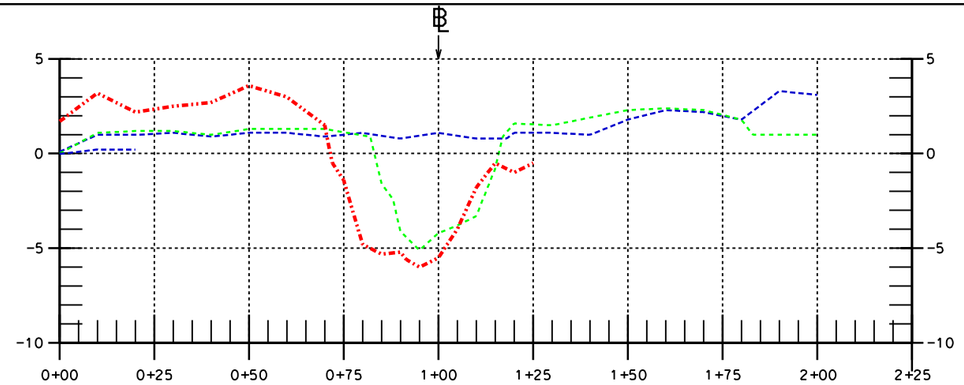

INLET CHANNEL TO STRUCTURE
STA. 18+45

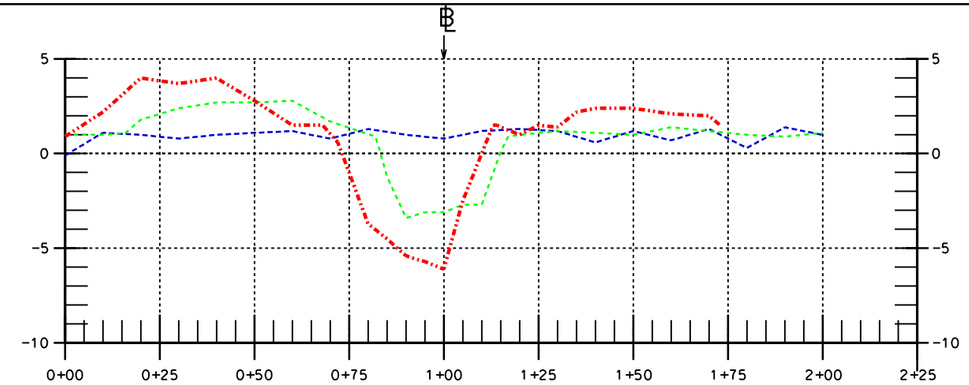

INLET CHANNEL TO STRUCTURE
STA. 19+15

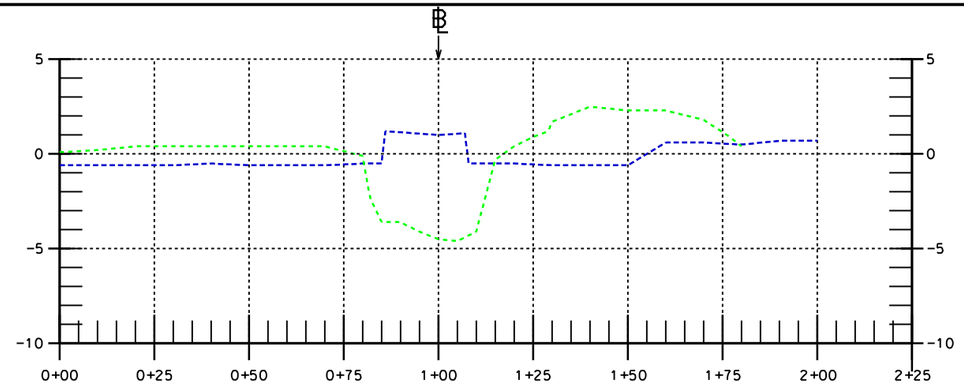

INLET CHANNEL TO STRUCTURE
STA. 20+64

ORIGINAL CROSS SECTIONS (SURVEY DATE: 8/17/00)

CONSTRUCTION CHECK CROSS SECTIONS (SURVEY DATE: 08/29/00)

FINAL CHECK CROSS SECTIONS (SURVEY DATE: 10/31/00)

"AS-BUILT"

Date 03/02
Approved by E.J. GIERING III
Title STATE CONSERVATION ENGINEER

Date 05/99
Designed J. Chua
Drawn A. J. Gremillion 03/02
Traced
Checked B. Sticker 03/02
Title

LOCATION CANAL (INLET) - AS-BUILT
BARATARIA BAY WATERWAY-WEST BANK
PROJECT # PBA-12A
JEFFERSON PARISH, LOUISIANA

U.S. DEPARTMENT OF AGRICULTURE - NATURAL RESOURCES CONSERVATION SERVICE

REVISIONS		
DATE	APPR.	TITLE

CAD FILE NO.
LA286016A6

DRAWING NO.
LA-286

SHEET NO 16A6 OF 16

...\drawings\LA286016A6.dgn 04/02/02 03:10:17 PM